March 16, 1954 B. COOPER 2,672,393

TREADLE CONTROLLED TOLL CHECKING SYSTEM

Filed Oct. 14, 1949 2 Sheets-Sheet 1

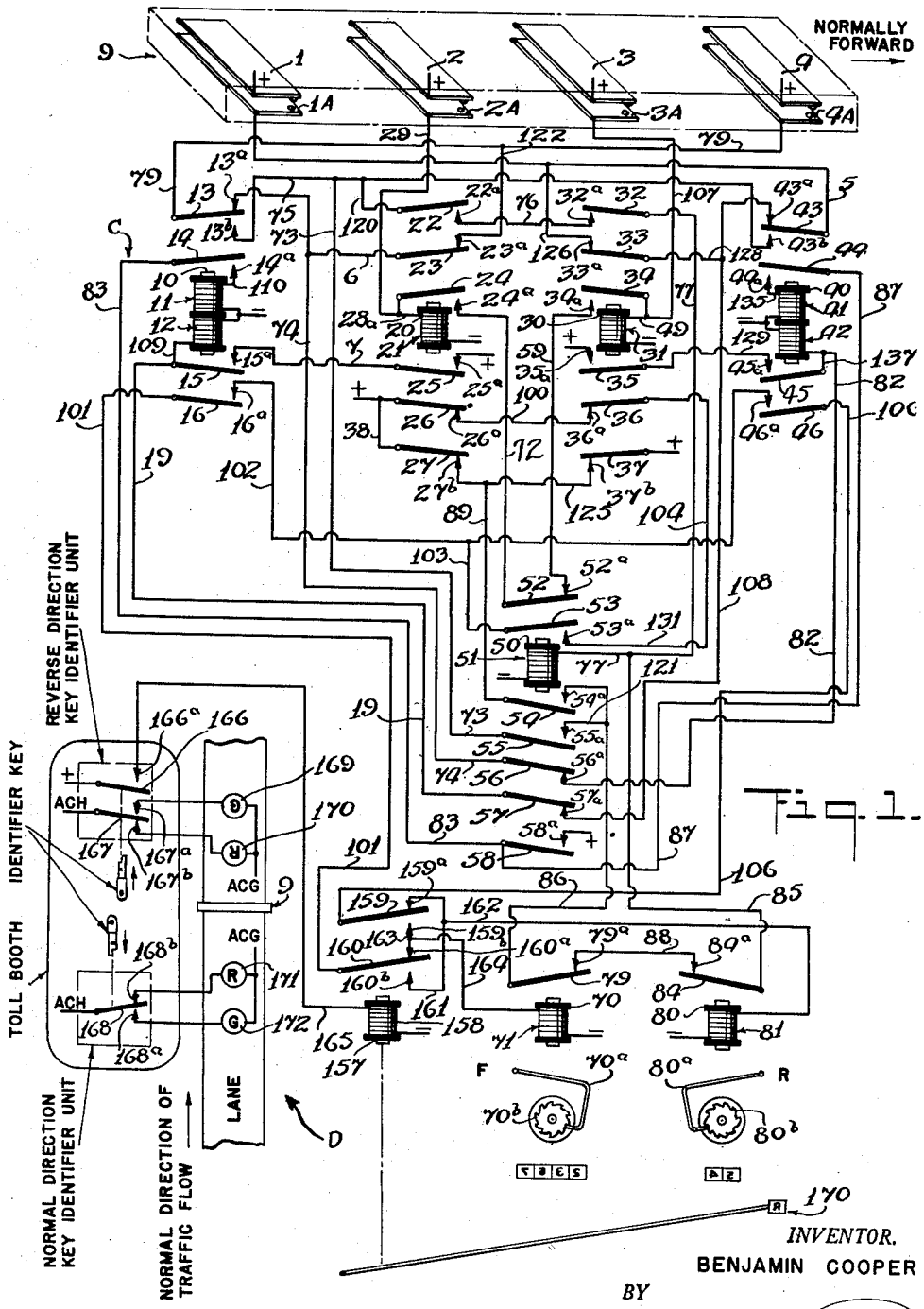

Fig. 1.

INVENTOR.
BENJAMIN COOPER
BY
J. B. Felsher
ATTORNEY

March 16, 1954 B. COOPER 2,672,393

TREADLE CONTROLLED TOLL CHECKING SYSTEM

Filed Oct. 14, 1949 2 Sheets-Sheet 2

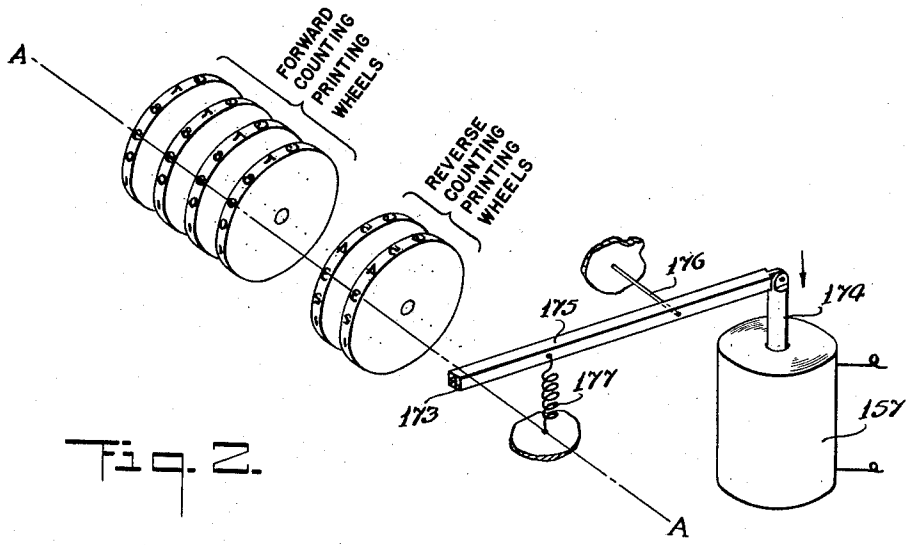

Fig. 2.

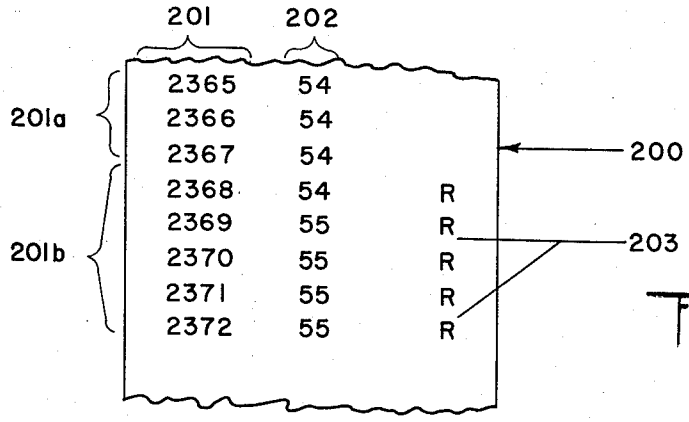

Fig. 3

INVENTOR.
BENJAMIN COOPER
BY J. B. Felshin
ATTORNEY

Patented Mar. 16, 1954

2,672,393

UNITED STATES PATENT OFFICE

2,672,393

TREADLE CONTROLLED TOLL CHECKING SYSTEM

Benjamin Cooper, New York, N. Y.

Application October 14, 1949, Serial No. 121,253

21 Claims. (Cl. 346—40)

1

This invention relates to improvements in toll checking systems, particularly those which comprise a treadle operated counter unit, key identifier units and a printing register.

Treadle operated toll checking systems are known in which the vehicle count for axles passing in a normal direction in a lane of transit is registered on one electrical counter, sometimes referred to as a forward counter, and the count of axles passing in reverse, caused, for instance, by a driver "backing up" inadvertently in the course of the toll collection transaction, is registered on another electrical counter, which may be referred to as a rearward or reverse counter. Such a system is described in applicant's U. S. Patent No. 2,313,627, issued March 9, 1943.

Because the direction of travel of the bulk of vehicular traffic changes during the day, this being occasioned, for instance, by the heavy flow of traffic into a city in the morning when people are going to work and the correspondingly heavy flow out of the city at night while people are traveling home, it is often necessary to reverse the normal direction of traffic flow in one or more lanes in a highway to accommodate such abnormal flow. Formerly, whenever this was done, it was necessary to carefully read and record the forward and rearward axle counts in order that the new "forward" counts would not be mixed with the old "rearward" counts. Moreover, in such a counting system, both directional counters had to be capable of adding to the same number of digits, since either might have been adding counts for traffic moving in a forward direction.

It is accordingly an object of this invention to provide, in a toll checking system of the character described, a means for electrically and automatically interchanging the directional axle counters when traffic flow is reversed in a lane through the use of two key identifier units, one for forward direction and one for reverse direction lane operation, so connected that one axle counter will always count axles passing in the proper or forward direction of flow and the other axle counter will always count rearward or "backing up" axle passage irrespective of which key identifier is being used.

Another object of this invention is to provide in a toll checking system of the character described, a means for automatically indicating in the register print record that the lane is in reverse traffic operation.

A further object of this invention is to provide, in a toll checking system of the character described, a means for automatically selecting

2

proper traffic signals in a lane operative in either direction, selection depending upon whether an identifier key is turned in "normal direction" key identifier lock or in a "reverse direction" key identifier lock.

A further object of this invention is to provide, in a toll checking system of the character described, a means for automatically selecting proper traffic signals in a lane operative in either direction and at the same time to automatically interchange the directional axle counters when traffic is reversed in a lane so that one axle counter will always count axles passing in the proper or forward direction of flow and the other axle will always count rearward or "backing up" axle passage, selection depending upon whether a switch is moved to a "normal direction" position or a "reverse direction" position.

A further object of this invention is to provide an improved toll checking system which is comparatively simple yet practical and efficient to a high degree in use.

Other objects of the invention will in part be obvious and in part hereinafter pointed out.

The invention accordingly consists of features of construction, combinations of elements and arrangements of parts which will be exemplified in the construction hereinafter described, and of which the scope of application will be indicated in the appended claims.

In the accompanying drawings, in which one of the various possible illustrative embodiments of this invention is shown,

Fig. 1 is a diagrammatic representation of a counting circuit embodying the invention;

Fig. 2 is a perspective drawing showing the operation of the reverse lane operation indication slug; and

Figure 3 is a fragmentary view of a printed record showing a sample of the normal direction consecutive count followed by an identified reverse direction consecutive count.

Fig. 1 comprises a treadle 9 connected to a circuit C including a forward counter F and a reverse counter R. As will be hereinafter described, each time an axle passes over the treadle a count will be added to one or the other of the counters, depending upon whether the axle is passing in a forward direction in the lane or "backing up" over the treadle.

Part D of the drawing is a representation of a reversible lane toll booth and its associated lane, key identifier units and traffic signal system, to be described hereinafter.

The operation of the counting circut and the

key identifier units, over which the present invention is an improvement, is detailed in applicant's U. S. Patent No. 2,313,627, issued March 9, 1943, and U. S. Patent No. 2,325,744, issued August 3, 1943, respectively. Therefore, only so much of their operation will be described herein as is necessary adequately to disclose the operation of the present invention.

Referring now in detail to the Fig. 1, 9 designates a treadle imbedded in a roadway, transversely thereof and adapted to be traversed by vehicles passing over the roadway. Mounted in the treadle 9 are a plurality of pairs of elongated parallel contacts, 1, 1A; 2, 2A; 3, 3A and 4, 4A. Said pairs of contacts constitute switches normally open but which may be successively closed and opened as the wheels of a vehicle roll over the treadle. The contacts 1, 2, 3 and 4 are connected to the plus side of an electric power supply. Preferably, the switches are spaced apart not more than three inches so that as the front and rear wheels of a vehicle roll over the treadle, the switches will be closed successively and adjacent switches will be concurrently closed.

The switches are connected by a circuit C of Fig. 1 so arranged, as will appear hereinafter, that the operation of the treadle in the proper or forward direction in which traffic in the reversible lane is being passed, will actuate a counter F, termed the forward counter, while wheels of a vehicle "backing up" over the treadle will operate a second counter R, termed the rearward counter.

The forward counter F comprises a relay 70 having a coil 71, one side of which is connected to the minus power supply. Said relay, when energized, is adapted to open a switch arm 79 which is normally in engagement with a fixed contact 79*a*. Said relay controls armature 70*a* adapted to advance ratchet wheel 70*b* carried on a shaft which also carries the usual printing wheels. A representation of the face of the printing wheels showing an arbitrary forward count is shown below said ratchet wheel 70*b*.

The rearward counter R comprises a relay 80 having a coil 81, one end of which is connected to the minus power supply. Said relay, when energized, is adapted to open a switch arm 84 which is normally in engagement with a fixed contact 84*a*. Said relay controls armature 80*a*, adapted to advance ratchet wheel 80*b* carried on a shaft which also carries the usual printing wheels. A representation of the face of the printing wheels showing an arbitrary reverse count is shown below said ratchet 80*b*.

Reverse lane operation solenoid 157 has a coil 158, one end of which is connected to the minus power supply. Associated with said solenoid are switch arms 159 and 160, normally in engagement with fixed contacts 159*a* and 160*a* and adapted to move out of engagement with said contacts and into engagement with fixed contacts 159*b* and 160*b*, respectively, when said relay is energized. Said solenoid is also adapted to move printing slug 173 into a printing position so that the letter "R" will be printed along with the forward and rearward axle totals only when said solenoid is energized.

Part D of Fig. 1 represents a toll collection booth at a reversible lane showing switches associated with a normal direction key identifier unit and a reverse direction key identifier unit and connections to a traffic signal system.

Switch 166 is normally in an open-circuited position and is adapted to be moved into engagement with switch contact 166*a* when an identifier key is inserted and turned in the reverse direction key identifier unit. Traffic light controlling switch arm 167 is normally in engagement with contact arm 167*b* and adapted to be moved out of engagement therewith and into engagement with switch contact 167*a* when said reverse key identifier is operated.

Switch arm 168 is normally in engagement with switch contact 168*b* and is adapted to move out of engagement therewith and into engagement with switch contact 168*a* when the identifier key is inserted and turned in the normal direction key identifier unit.

Fig. 2 shows the mechanical operation of the reverse lane operation solenoid with respect to the printing slug 173. It can be seen that when solenoid 157 is not energized printing slug 173 is in a position removed from the printing position indicated by the line A—A falling along the face of the printing wheels. When solenoid 157 is energized (the condition representative of reverse lane operation) its armature 174 pivotally connected to lever 175 moves inwardly in a direction as indicated by the arrow. Said lever, having its fulcrum at fixed pin 176, moves printing slug 173 at the remote end of lever 175 into its printing position along the line A—A. Spring 177, fixed at one end and connected at the other end to the lever at a point between the slug end and the fulcrum serves to move said lever and its slug out of printing position when solenoid 157 is deenergized.

The circuit C comprises four relays designated by numerals 10, 20, 30 and 40. Relay 10 has two windings 11 and 12 connected together and to a minus power supply. Associated with relay 10 are movable switch arms 13, 14, 15 and 16. Switch arm 13 is normally in engagement with a fixed contact 13*a* and is adapted to be moved by the relay 10 into engagement with a fixed contact 13*b*. The switch arm 14 is normally open and is adapted to be moved by the relay 10 into engagement with a fixed contact 14*a*. Switch arms 15 and 16 are normally open, but are adapted to be moved by the relay 10 into engagement with fixed contacts 15*a* and 16*a*, respectively.

Relay 20 is provided with a coil 21 connected at one end to a minus power supply. Associated with said relay are switch arms 22, 23, 24, 25, 26 and 27. Switch arms 22, 24, 25 are normally open and are adapted to be moved by the relay 20 into engagement with fixed contacts 22*a*, 24*a* and 25*a*, respectively. Switch arm 23 normally engages a fixed contact 23*a* and is adapted to be opened by the relay 20. Switch arm 26 is normally in engagement with a fixed contact 26*a*, but is adapted to be opened by the relay 20. Switch arm 27 is normally in engagement with a fixed contact 27*b* but is adapted to be opened by the relay 20.

Relay 30 is provided with a coil 31 connected at one end to the minus power supply. Said relay controls switch arms 32, 33, 34, 35, 36 and 37. Switch arms 32, 34 and 35 are normally open but are adapted to be moved by said relay into engagement with fixed contacts 32*a*, 34*a* and 35*a*, respectively. Switch arm 33 is normally in engagement with a fixed contact 33*a* and is adapted to be opened by said relay 30. Switch arm 36 is normally in engagement with a fixed contact 36*a* and is adapted to be opened by the relay 30. Switch arm 37 is normally in engagement with a fixed contact 37*b* but is adapted to be moved out

of engagement with respect thereto upon the energizing of said relay 30.

Relay 40 has two coils 41 and 42. Said coils are interconnected at adjacent ends and connected to the minus power supply. Associated with the relay 40 are switch arms 43, 44, 45 and 46. Switch arms 44, 45 and 46 are normally open but are adapted to be moved by said relay into engagement with fixed contacts 44a, 45a and 46a. Switch arm 43 is normally in engagement with a fixed contact 43a but is adapted to be moved by said relay out of engagement with respect thereto and into engagement with another fixed contact 43b.

Said circuit C further comprises a relay 50 provided with a coil 51, one end of which is connected to the minus power supply. Associated with the relay 50 are switch arms 52, 53, 54, 55, 56, 57 and 58. Switch arms 53, 54, 55 and 58 are normally open and are adapted to be moved by said relay into engagement with fixed contacts 53a, 54a, 55a and 58a, respectively. Switch arm 52 normally contacts fixed contact 52a but is adapted to be opened by relay 50. Switch arms 56 and 57 normally engage fixed contacts 56a and 57a, respectively, and are adapted to be opened by the relay when the latter is energized.

Contact 1A is connected by wire 5 to the switch arm 43 and by wire 126 to the fixed contact 33a. Contact 2A is connected by wire 29 to switch arm 24 and by wire 28a to the coil 21. Contact 3A is connected by wire 107 to the switch arm 34 and by wire 49 to the coil 31. Contact 4A is connected by wire 79 to the switch arm 13 and by wire 122 to the fixed contact 23a. Fixed contact 13a is connected by wire 74 to the switch arm 55 and by wire 6 to the switch arm 23.

Fixed contact 13b is connected by wire 75 to the fixed contact 43b and by wire 73 to the switch arm 55, and also by wire 120 to the switch arm 22. Fixed contact 14a is connected by wire 110 to the coil 11. Fixed contact 15a is connected by wire 7 to the switch arm 25. Switch arm 15 is connected by wire 109 to the coil 12 and by wire 19 to the switch arm 57. Fixed contact 16a is connected by wire 102 to fixed contact 46a and by wire 103 to the switch arm 53. Switch arm 16 is connected by wire 101 to the switch arm 160.

Fixed contact 22a is connected by wire 76 to the fixed contact 32a. Fixed contact 24a is connected by wire 72 to the switch arm 52. Fixed contact 25a is connected to the plus power supply. Switch arm 26 is connected to plus power supply and by wire 38 to switch arm 27. Fixed contact 26a is connected by wire 100 to the fixed contact 36a. Fixed contact 27b is connected by wire 125 to fixed contact 37b and by wire 89 to switch arm 54. Switch arm 32 is connected by wire 77 to one side of the coil 51 and by wire 85 to the switch arm 34. Switch arm 33 is connected by wire 123 to fixed contact 43a and by wire 108 to the fixed contact 57a. Fixed contact 34a is connected by wire 59 to fixed contact 52a. Fixed contact 35a is connected to the plus power supply. Switch arm 35 is connected by wire 129 to the fixed contact 45a. Switch arm 36 is connected by wires 104 and 131 to the fixed contact 53a. Switch arm 37 is connected to the plus power supply. Switch arm 44 is connected by wire 87 with switch arm 58. Fixed contact 44a is connected by wire 135 to coil 41. Coil 42 is connected by wire 137 to the switch arm 45 and by wire 82 to the fixed contact 56a. Switch arm 46 is connected by wire 106 to switch arm 159.

Fixed contact 54a is connected by wire 86 to switch arm 79 and by wire 124 to the fixed contact 55a. Fixed contact 58a is connected to the plus power supply. Fixed contacts 79a and 84a are interconnected by a wire 88.

Fixed contacts 159a and 160b are interconnected by wire 161 and connected by wire 162 to the coil 81. Fixed contacts 159b and 160a are interconnected by wire 163 and connected by wire 164 to the coil 71. Coil 158 is connected by wire 165 to a lane-reversing switch fixed contact 166a associated with the reverse lane key identifier unit and adapted to be closed when the reverse lane key identifier is operated with its key. The movable arm 166 of said switch is connected to the plus power supply. Wire 106 can be seen to complete a circuit through switch 159, 159a to counter relay coil 81, and wire 101 through switch 160, 160a to counter relay coil 71. When reverse lane operation relay 157 is energized, however, it is evident that wire 106 will be in circuit through 159, 159b with counter relay coil 71; and wire 101 through switch 160, 160b with counter relay coil 81, thus effecting an electrical interchange between the counter relays 70 and 80 with respect to counter energizing wires 101 and 106.

In the reverse direction key identifier unit, movable arm 167 is connected to one terminal of a source of A. C. current. Switch contacts 167a and 167b are connected to one terminal of green traffic light 169 and red traffic light 170, respectively, the other terminals of said traffic lights being both connected to the other terminal of the source of A. C. current. Said traffic lights are positioned in the lane so as to signal traffic approaching in the reverse direction of the reversible lane, as hereinafter described.

In the normal direction key identifier unit, movable arm 168 is connected to one terminal of a source of A. C. current. Switch contacts 169a and 169b are connected to one terminal of green traffic light 172 and red traffic light 171, respectively, the other terminals of said traffic lights both being connected to the other terminal of the source of A. C. current. Said traffic lights are positioned in the lane so as to signal traffic approaching in the normal direction of the reversible lane, as hereinafter described.

When the wheels of a vehicle roll over treadle 9 from left to right, in the direction indicated in the drawing, switch 1, 1A will first close energizing relay 10 through coil 12 thereof. The completed circuit is from the plus side of a source or potential through switch 1, 1A, wire 5, switch 43, 43a, wire 108, switch 57, 57a, wire 19, wire 109, and the coil 12, to the minus side of a source of potential. The energizing circuit for said relay may also be traced through switch 1, 1A, wires 5 and 126, closed switch 33, 33a, through wire 128, and thence through wire 108, as before. The energized relay 10 will then close the switches 13, 13b; 14, 14a; 15, 15a; 16, 16a and 18, 18a, and open the switches 13, 13a and 17, 17a.

When switch 2, 2A is thereafter closed by the wheels of a vehicle, while switch 1, 1A is still closed, relay 20 will be energized by the completed circuit through switch 2, 2A wire 29 and 28a and coil 21. Switches 22, 22a; 24, 24a and 25, 25a now close and switches 23, 23a; 26, 26a and 27, 27b now open. Holding circuit will now be completed through coil 12 energizing the relay 10 and keeping the said relay energized after switch 1, 1A of treadle 9 has been opened. This cir-

cuit is through switch 25, 25a, wire 7, switch 15, 15a, wire 109 and coil 12, to the minus side of an electrical power supply.

Following through the motion of the wheels over the treadle 9, switch 1, 1A will open and switch 3, 3A will be closed while switch 2, 2A is still closed. In closing switch 3, 3A, relay 30 will be energized by the circuit from the plus side of a source of electric power through switch 3, 3A, wires 107 and 49, and the coil 31 of relay 30 to the minus side of a source of electric power. Energization of relay 30 closes switches 32, 32a; 34, 34a and 35, 35a and opens switches 33, 33a; 36, 36a and 37, 37b.

In closing switch 3, 3A, and by action of the energized relay 30, a circuit is completed to hold relay 20 energized even if switch 2, 2A is opened. The completed circuit is through switch 3, 3A, wire 107, switch 34, 34a, wire 59, switch 52, 52a, wire 72, switch 24, 24a, wire 28a and coil 21 of the relay 20.

Still following the passage of the wheels over the treadle 9 in the direction indicated on the drawing, switch 4, 4A will close and switch 2, 2A will open while switch 3, 3A is still closed.

Closing switch 4, 4A will provide a circuit energizing relay 50, the circuit being through coil 51 of relay 50, wire 77, switch 32, 32a, wire 76, switch 22, 22a, wires 120 and 75, switch 13, 13b, wire 79 and switch 4, 4A. Energizing relay 50 will close switches 53, 53a; 54, 54a; 55, 55a and 58, 58a, and will open switches 52, 52a; 56, 56a and 57, 57a. By closing switch 55, 55a, another energizing circuit for relay 50 is completed, the purpose of which will be hereinafter apparent. This second circuit may be traced from minus power supply through coil 51 of said relay, wires 77 and 85, switch 84, 84a, wire 88, switch 79, 79a, wires 86 and 121, switch 55, 55a, wires 73 and 75, switch 13, 13b (the relay 10 being energized) wire 79, through closed switch 4, 4A, to plus power supply. In closing switch 58, 58a another circuit will be completed holding the relay 10 energized through coil 11 of said relay, the circuit being through switch 58, 58a, wire 83, switch 14, 14a; wire 110 and coil 11.

Opening switch 52, 52a will break the previously described circuit holding relay 20 energized through switch 3, 3A. Switch 2, 2A has also been opened by the wheel rolling off the lane, breaking the circuit through said switch and coil 21 of relay 20. Relay 20 is then de-energized. De-energization of relay 20 will allow switches 23, 23a; 26, 26a and 27, 27b to close and will allow switches 22, 22a; 24, 24a; and 25, 25a to open.

De-energization of relay 20 serves to complete a holding circuit for relay 50 in its energized condition, for the purpose hereinafter appearing. The second circuit for relay 50 holds said relay energized while switch 22, 22a opens upon de-energizing relay 20. This holding circuit is from the negative side of a source of electrical energy, through coil 51 of relay 50, wires 77 and 85, switch 84, 84a, wire 88, switch 79, 79a, wire 86, switch 54, 54a, switch 27, 27b and through wire 38 to the positive side of a source of electrical energy.

The further progression of the wheels over the treadle 9 will open switch 3, 3A de-energizing relay 30. Switches 33, 33a; 36, 36a and 37, 37b will then close, and switches 32, 32a; 34, 34a and 35, 35a will then open. Opening of switch 3, 3A will energize the directional forward counter F, the completed circuit being through coil 71 of

counter relay 70, wire 164, switch 160, 160a, wire 101, switch 16, 16a, wires 102 and 103, switch 53, 53a, wires 131 and 104, switch 36, 36a, wire 100, and switch 26, 26a. Counter relay 70 will then register one count on the counter F. The actuation of counter F will open switch 79, 79a and hence break the holding circuit for relay 50 through said switch. It will not be noted that relay 50 was held in energized condition until counter F was actuated irrespective of the condition of the last two treadle switches 3, 3A; 4, 4A to insure a count even if the wheels pass over the treadle at a great rate of speed. De-energized relay 50 will allow switch 58, 58a to open, opening the circuit of coil 11 of relay 10, thereby de-energizing relay 10. All the switches of the treadle are then opened and all relays are de-energized.

The operation of the circuit as described would be similar were all the steps in the operation of the circuit taken in the reverse order. The closing of switches in the sequence 4, 4A; 3, 3A; 2, 2A and 1, 1A will operate the backward counter R.

It will now be understood that once the lane reversing switch is set at its proper position, depending upon whether the lane is to be operated in normal direction of transit or in reverse transit, the closure of the switches in the order of 1, 1A and 2, 2A or 4, 4A and 3, 3A will determine the directional counter to be actuated.

For reverse lane operation, the switch 166, 166a is closed, through the use of the reverse lane key identifier, thereby operating relay 157 and effectively electrically interchanging the energizing circuit connections (wires 101 and 106) to counter relays 70 and 80. At the same time printing slug 173, associated with solenoid 157 is moved into a printing position, thereby allowing its print to be made whenever an axle count print is made. This printing serves to indicate on the printed record when the system is in the reverse lane operation. As illustrated in Figure 3, the printed record 200 has two groups of columnar numerical representatives 201, 202 respectively, printed thereon. The column 201 is printed from the settings of the forward counting printing wheels, while column 202 is taken from the settings of the rearward counting printing wheels. Column 201 is further divided into two groups of consecutive numbers, as at 201a and 201b. Group 201a represents the last three axle counts of vehicular traffic travelling on the lane and crossing the treadle in normal traffic direction. After count 2367 was made, the reverse direction identifier key was actuated to effect energization of solenoid 157 which moved printing slug 173 into printing position. As hereinbefore described, the directional counters were similarly reversed with the energizing of solenoid 157. Thus, the first axle traversing the treadle in the reverse direction will effect a consecutive count on the forward counter as shown in Figure 3, as 2368. A printing hammer and inking mechanism, not shown, is arranged to press record 200 against the counter digit wheels with each counting operation and imprint thereon, the respective numerals. With slug 173 in printing position, the first count and all subsequent counts of the reverse traffic flow will effect the printing of the reverse identification character R, along with the total count. Therefore, record 200 will readily show the number of axle counts occurring in each of the directional periods. Obviously, when traffic direction is again returned to normal direction, the actuation of the respective identifier key will de-energize solenoid

157 and release slug 173 to be spring urged out of printing position. Therefore, the forward normal directional traffic count is readily identified on record 200 by the absence of the character R.

Since the herein described invention is intended for use on roadways having periodically reversible one-way or uni-directional vehicular transit, the rearward counters are provided to record and count vehicle axles that inadvertently back-up and recross the treadle after having previously rolled over said treadle. Column 202 shows that the first axle of the reverse group backed up, recrossing the treadle to actuate the rearward counter. Thus, in addition to the recording of a false double count, a rearward count is also recorded which, when subtracted from the forward count, indicates the true forward count of the vehicle axles. In this way the count of axles moving in the proper or forward direction of transit is always added on the forward counter F and the backward moving axles are always counted on the rearward counter R regardless of whether the lane is being operated in its normally forward direction of traffic flow or its reverse direction. Moreover, since rearward axle movement is unusual, being caused in most instances by vehicles being backed up over the counting treadles in the course of the toll collection transaction, the rearward counter can be designed to count to a much smaller total than the forward counter, thus effecting a simplification of the rearward counter over the counters in the ordinary system wherein either counter might be counting forward passing axles in a reversible lane.

Referring again to Part D of Fig. 1, it is evident that when the reversible lane is not being used, i. e., when it is closed to traffic, red lights 169 and 172 will both be energized, signalling cars approaching in either direction to stop. However, when the lane is open to traffic in either direction, by the use of an identifier unit key, the corresponding traffic lights will be changed from red to green thus signalling that the lane is open to traffic in that particular direction.

The electrical circuit for this switching operation can be seen, for instance, in the normal direction key identifier unit, to be from the A. C. source ACH through switch 168, 168a (the key being in said identifier unit) to one terminal of green traffic signal 172, the other terminal of said traffic signal being connected to the A. C. signal energizing source ACG.

It will thus be seen that there is provided a system in which the several objects of this invention are achieved and which is well adapted to meet the conditions of practical use.

As various possible embodiments might be made of the above invention and as various changes might be made in the embodiment set forth, it is to be understood that all matter set forth or shown in the accompanying drawings is to be interpreted as illustrative and not in a limiting sense.

Having thus described my invention I claim as new and desire to secure by Letters Patent:

1. In combination, electrically operated indicator means to sense movement of a vehicle in one direction in a lane, electrically operated indicator means to sense movement of a vehicle in the opposite direction in said lane and means including relay switch means and manually operable switch means for controlling said relay switch means to cause said first indicator means to sense movement of vehicles in said lane in said opposite direction and to cause said second indicator means to sense movement of vehicles in said first direction in said lane.

2. In combination, a treadle in a lane of uni-directional vehicular transit, a forward counter, a rearward counter, means operable to actuate the forward counter to count axles of vehicles moving in the lane over the treadle in one direction, and to actuate the rearward counter to count axles of vehicles backing up over the treadle in the lane and moving in the opposite direction, and reversing means including relay switch means and manually operable switch means for controlling said relay switch means to cause said forward counter to count vehicles moving over the treadle in the lane in said opposite direction upon reversing the direction of traffic flow in the lane and to count vehicles backing up in the lane in said first direction on said rearward counter.

3. In combination, a treadle in a lane of uni-directional vehicular transit, a forward counter, a rearward counter, means operable to actuate the forward counter to count axles of vehicles moving in the lane over the treadle in one direction and to actuate the rearward counter to count axles of vehicles backing up over the treadle in the lane and moving in the opposite direction, and reversing means operable to cause said forward counter to count vehicles moving over the treadle in the lane in said opposite direction upon reversing the direction of traffic flow in the lane and to count vehicles backing up in the lane in said first direction on said rearward counter, said first means including a circuit for each counter, a movable switch in each circuit so arranged that in one position of said switch the first switch connects the first circuit to the forward counter and the other circuit to the rearward counter, said switches being movable to a second position, and means operative in the second position of said switches to connect the first circuit to the rearward counter and the second circuit to the forward counter and said reversing means including relay means to move the switch from the first to the second position, and a circuit to control said relay means, a switch in said circuit, and a key controlling said last switch.

4. In combination, a treadle in a lane of uni-directional vehicular transit, a forward counter, a rearward counter, means operable to actuate the forward counter, to count axles of vehicles moving in the lane over the treadle in one direction, and to actuate the rearward counter to count axles of vehicles backing up over the treadle in the lane and moving in the opposite direction, printing means to make a printed record of the counts on said forward counter and said rearward counter, a printing slug having printing indicia thereon normally out of printing position with respect to said printing means, reversing means actuable to cause said forward counter to count vehicles moving over the treadle in the lane in said opposite direction upon reversing the direction of traffic flow in the lane, and to count vehicles backing up in the lane in said first direction on said rearward counter, and means responsive to the actuation of said reversing means to cause said printing slug to move into printing position with respect to said printing means.

5. In combination, a treadle in a lane of uni-directional vehicular transit, a forward counter,

a rearward counter, means operable to actuate the forward counter to count axles of vehicles moving in the lane over the treadle in one direction, and to actuate the rearward counter to count axles of vehicles backing up over the treadle in the lane and moving in the opposite direction, printing means to make a printed record of the counts on said forward counter and said rearward counter, a printing slug, having printing indicia thereon normally out of printing position with respect to said printing means, reversing means actuable to cause said forward counter to count vehicles moving over the treadle in the lane in said opposite direction upon reversing the direction of traffic flow in the lane, and to count vehicles backing up in the lane in said first direction on said rearward counter and means actuable at the same time to cause said printing slug to move into printing position with respect to said printing means, said first means including a circuit for each counter, a movable switch in each circuit so arranged that in one position of said switch the first switch connects the first circuit to the forward counter and the other circuit to the rearward counter, said switches being movable to a second position, and means operative in the second position of said switches to connect the first circuit to the rearward counter and the second circuit to the forward counter, and said reversing means including relay means operable to move the switch from the first to the second position, and a circuit to control said relay means, a switch in said circuit, and a key controlling said last switch.

6. In combination, a treadle in a lane of unidirectional vehicular transit, a traffic signal system to allow passage of traffic in one direction in said lane, and to stop traffic in the other direction in said lane, a forward counter, a rearward counter, means operable to actuate the forward counter to count axles of vehicles moving in the lane over the treadle in one direction and to actuate the rearward counter to count axles of vehicles backing up over the treadle in the lane and moving in the opposite direction, printing means to make a printed record of the counts on said forward counter and said rearward counter, a printing slug with printing indicia thereon normally out of printing position with respect to said printing means, reversing means actuatable to cause said forward counter to count vehicles moving over the treadle in the lane in said opposite direction upon reversing the direction of traffic flow in the lane and to counter vehicles backing up in the lane in said first direction on said rearward counter and means controlled by the reversing means to cause said printing slug with printing indicia thereon to be brought into printing position with respect to said printing means, and means controlled by said reversing means to reverse said traffic signal system so that passage is allowed only in said opposite direction in said lane and stopped in the first direction.

7. In combination, a treadle in a lane of unidirectional vehicular transit, a traffic signal system to allow passage of traffic in one direction in said lane, and to stop traffic in the other direction in said lane, a forward counter, a rearward counter, means operable to actuate the forward counter to count axles of vehicles moving in the lane over the treadle in one direction and to actuate the rearward counter to count axles of vehicles backing up over the treadle in the lane and moving in the opposite direction, printing means operable to make a printed record of each count on said forward counter and said rearward counter, a printing slug with printing indicia thereon normally out of printing position with respect to said printing means, reversing means actuatable to cause said forward counter to count vehicles moving over the treadle in the lane in said opposite direction upon reversing the direction of traffic flow in the lane and to count vehicles backing up in the lane in said first direction on said rearward counter, means controlled by the reversing means to cause said printing slug with printing indicia thereon to be brought into printing position with respect to said printing means, means controlled by said reversing means to reverse said traffic signal system so that passage is allowed only in said opposite direction in said lane and stopped in the first direction, said first means including a circuit for each counter, a movable switch in each circuit so arranged that in one position of said switch the first switch connects the first circuit to the forward counter and the other circuit to the rearward counter, said switches being movable to a second position, and means operative in the second position of said switches to connect the first circuit to the rearward counter and the second circuit to the forward counter, said reversing means including relay means to move the switch from the first to the second position, a circuit to control said relay means, a switch in said circuit and a key controlling said last switch.

8. In a reversible lane of uni-directional vehicular traffic, the combination comprising: a traffic signal system for vehicles moving in the normal direction of traffic flow in said lane; a traffic signal system for vehicles moving in the reverse direction of traffic flow in said lane; said systems each comprising "stop" and "go" lights; an energizing circuit for said reverse direction traffic signal system; a switch in said circuit, connected so that when said switch is in a first position said reverse direction "stop" light is energized and said reverse direction "go" light is de-energized, and when in a second position said "go" light is energized and said "stop" light is de-energized; another switch operative with said first switch; an energizing circuit through said other switch including a relay; a pair of single-pole double-throw switches controlled by said relay; counter energizing circuits through said pair of switches including a forward counter and a rearward counter; counter energizing pulse means in said counter circuits operative to energize selectively one of said counters when a vehicle passes in one direction in said lane and to energize the other of said counters when a vehicle backs-up in another direction in said lane, the selection depending upon whether or not said relay is energized; an energizing circuit for said normal direction traffic signal system; a switch in said circuit connected so that when said last switch is in a first position said normal direction "stop" light is energized and said normal direction "go" light is de-energized, and when said last switch is in another position said latter "go" light is energized and said latter "stop" light is de-energized; so that when said traffic signal energizing switches are set for traffic to go in the normal direction, said forward counter will be actuated to count traffic passage in the normal direction and said rearward counter will be actuated to count vehicles backing up; and when said traffic energizing switches are set for traffic to go in the reverse direction, said forward counter will be actuated to

count traffic passing in the rearward direction and said rearward counter will be actuated to count traffic "backing-up."

9. In combination, a treadle in a lane of unidirectional vehicular transit, a forward counter, a rearward counter, means operable to actuate the forward counter to count axles of vehicles moving in the lane over the treadle in one direction, and to actuate the rearward counter to count axles of vehicles backing up over the treadle in the lane and moving in the opposite direction, reversing means operable to cause said forward counter to count vehicles moving over the treadle in the lane in said opposite direction upon reversing the direction of traffic flow in the lane and to count vehicles backing up in the lane in said first direction on said rearward counter, a "go" light for vehicles moving in the lane in the first direction, a "stop" light to stop vehicles from moving in said lane in an opposite direction, means to energize said "go" and "stop" lights, a "go" light for signaling cars to advance in said lane in said opposite direction, a "stop" light to stop vehicles from moving in the lane in said first direction and means operative upon operating said reversing means to cause the last mentioned "go" light to become energized and to cause the first mentioned "stop" light to become de-energized.

10. In combination, a treadle in a lane of unidirectional vehicular transit, a forward counter, a rearward counter, means operable to actuate the forward counter to count axles of vehicles moving in the lane over the treadle in one direction and to actuate the rearward counter to count axles of vehicles backing up over the treadle in the lane and moving in the opposite direction, reversing means operable to cause said forward counter to count vehicles moving over the treadle in the lane in said opposite direction upon reversing the direction of traffic flow in the lane and to count vehicles backing up in the lane in said first direction on said rearward counter, a "go" light for vehicles moving in the lane in the first direction, a "stop" light to stop vehicles from moving in said lane in an opposite direction, means to energize said "go" and "stop" lights, a "go" light for signaling cars to advance in said lane in said opposite direction, a "stop" light to stop vehicles from moving in the lane in said first direction, means operative upon operating said reversing means to cause the last mentioned "go" light to become energized and to cause the first mentioned "stop" light to become de-energized, and means for de-energizing the first mentioned "go" light and energizing the second mentioned "stop" light.

11. In combination, a treadle in a lane of unidirectional vehicular transit, a forward counter, a rearward counter, means operable to actuate the forward counter to count axles of vehicles moving in the lane over the treadle in one direction, and to actuate the rearward counter to count axles of vehicles backing up over the treadle in the lane and moving in the opposite direction, and reversing means including relay switch means and manually operable switch means for controlling said relay switch means to cause said forward counter to count vehicles moving over the treadle in the lane in said opposite direction upon reversing the direction of traffic flow in the lane and to count vehicles backing up in the lane in said first direction on said rearward counter, a traffic signaling means for said lane and means operative upon operating said manually operable switch means to control said traffic signaling means.

12. In combination, a treadle in a lane of vehicular transit, a forward counter, a rearward counter, means to add on the forward counter axles of vehicles moving in the lane over the treadle in one direction, and to add on the rearward counter axles of vehicles backing up over the treadle in the lane and moving in the opposite direction, and reversing means including relay switch means and a manually operable switch means for controlling said relay switch means to cause said forward counter to count vehicles moving over the treadle in the lane in said opposite direction upon reversing the direction of traffic flow in the lane to count vehicles backing up in the lane in said first direction on said rearward counter, a "go" light to signal vehicles to move in said lane in one direction, a "stop" light to stop cars from moving in said lane in said direction, means to energize one of said signals and means operative upon operating said manually operable switch means to de-energize the energized signal and energize the de-energized signal.

13. In combination, a treadle in a lane of unidirectional vehicular transit, a forward counter, a rearward counter, means operable to actuate the forward counter to count axles of vehicles moving in the lane over the treadle in one direction, and to actuate the rearward counter to count axles of vehicles backing up over the treadle in the lane and moving in the opposite direction, reversing means operable to cause said forward counter to count vehicles moving over the treadle in the lane in said opposite direction upon reversing the direction of traffic flow in the lane and to count vehicles backing up in the lane in said first direction on said rearward counter, a "go" light to signal vehicles to move in said lane in one direction, a "stop" light to stop vehicles from moving in said lane in said direction, and means to energize one of said signals, means operative upon operating said reversing means to de-energize the energized signal and energize the de-energized signal, a "go" signal light to signal vehicles to advance in the lane in an opposite direction, a "stop" signal light to stop vehicles from moving in said opposite direction, means to energize one of said last two signals and means to de-energize the same and energize the other of said last two signals.

14. In combination, a treadle in a lane of unidirectional vehicular transit, a forward counter, a rearward counter, means operable to actuate the forward counter to count axles of vehicles moving in the lane over the treadle in one direction, and to actuate the rearward counter to count axles of vehicles backing up over the treadle in the lane and moving in the opposite direction, a printing slug, and printing indicia thereon normally out of printing position, reversing means operable to cause said forward counter to count vehicles moving over the treadle in the lane in said opposite direction upon reversing the direction of traffic flow in the lane, and to count vehicles backing up in the lane in said first direction on said rearward counter, and means operable at the same time to cause said printing slug to move into printing position.

15. In combination, a treadle in a lane of unidirectional vehicular transit, a forward counter, a rearward counter, means operable to count the forward counter to count axles of vehicles mov-

ing in the lane over the treadle in one direction, and to actuate the rearward counter to count axles of vehicles backing up over the treadle in the lane and moving in the opposite direction, said counters each being provided with embossed counter wheels, a printing slug and printing indicia thereon normally out of printing position relative to said counter wheels, reversing means operable to cause said forward counter to count vehicles moving over the treadle in the lane in said opposite direction upon reversing the direction of traffic flow in the lane, and to count vehicles backing up in the lane in said first direction on said rearward counter, and means controlled by said reversing means operable to move said printing slug into printing position relative to said embossed counting wheels.

16. In combination, vehicle sensing means in a lane of uni-directional vehicular transit, a forward counter, a rearward counter, means operable to actuate the forward counter to count axles of vehicles moving in the lane past the vehicle sensing means in one direction, and to actuate the rearward counter to count axles of vehicles backing up past the vehicle sensing means in the lane and moving in the opposite direction, a printing slug having printing indicia thereon normally out of printing position, reversing means operable to cause said forward counter to count vehicles moving over the sensing means in the lane in said opposite direction upon reversing the direction of traffic flow in the lane, and to count vehicles backing up in the lane in said first direction on said rearward counter, and means operable at the same time to cause said printing slug to move into printing position.

17. In combination, vehicle sensing means in a lane of uni-directional vehicular transit, a forward counter, a rearward counter, means operable to actuate the forward counter to count axles of vehicles moving in the lane past the vehicle sensing means in one direction, and to actuate the rearward counter to count axles of vehicles backing up past the vehicle sensing means in the lane and moving in the opposite direction, and reversing means including relay switch means and manually operable switch means for controlling said relay switch means to cause said forward counter to count vehicles moving over the treadle in the lane in said opposite direction upon reversing the direction of traffic flow in the lane and to count vehicles backing up in the lane in said first direction on said rearward counter.

18. In combination, vehicle sensing means in a lane of uni-directional vehicular transit, a forward counter, a rearward counter, means operable to actuate the forward counter to count axles of vehicles moving in the lane past the vehicle sensing means in one direction, and to actuate the rearward counter to count axles of vehicles backing up past the vehicle sensing means in the lane and moving in the opposite direction, printing means to make a printed record of the counts on said forward counter and said rearward counter, a printing slug, having printing indicia thereon normally out of printing position with respect to said printing means, reversing means operable to cause said forward counter to count vehicles moving over the sensing means in the lane in said opposite direction upon reversing the direction of traffic flow in the lane, and to count vehicles backing up in the lane in said first direction on said rearward counter, and means operable therewith to cause said printing slug to move into printing position with respect to said printing means.

19. In combination, vehicle sensing means in a lane of uni-directional vehicular transit, a traffic signal system to allow passage of traffic in one direction in said lane, and to stop traffic in the other direction in said lane, a forward counter, a rearward counter, means operable to actuate the forward counter to count axles of vehicles moving in the lane past the vehicle sensing means in one direction and to actuate the rearward counter to count axles of vehicles backing up past the vehicle sensing means in the lane and moving in the opposite direction, printing means to make a printed record of the counts on said forward counter and said rearward counter, a printing slug with printing indicia thereon normally out of printing position with respect to said printing means, reversing means operable to cause said forward counter to count vehicles moving past the vehicle sensing means in the lane in said opposite direction upon reversing the direction of traffic flow in the lane and to count vehicles backing up in the lane in said direction on said rearward counter and means controlled by the reversing means to move said printing slug with printing indicia thereon into printing position with respect to said printing means, and means controlled by said reversing means to reverse said traffic signal system so that passage is allowed only in said opposite direction in said lane and stopped in the first direction.

20. In combination, vehicle sensing means in a lane of uni-directional vehicular transit, a traffic signal system to allow passage of traffic in one direction in said lane, and to stop traffic in the other direction in said lane, a forward counter, a rearward counter, means operable to actuate the forward counter to count axles of vehicles moving in the lane past the vehicle sensing means in one direction and to actuate the rearward counter to count axles of vehicles backing up past the vehicle sensing means in the lane and moving in the opposite direction, printing means to make a printed record of the counts on said forward counter and said rearward counter, a printing slug with printing indicia thereon normally out of printing position with respect to said printing means, means to reverse said traffic signal system so that passage is allowed only in said opposite direction in said lanes and stopped in the first direction, and means controlled by said last means to move said printing slug with printing indicia thereon into printing position with respect to said printing means.

21. In combination, a treadle in a lane of uni-directional vehicular transit, a traffic signal system to allow passage of traffic in one direction in said lane, and to stop traffic in the other direction in said lane, a forward counter, a rearward counter, means operable to actuate the forward counter to count axles of vehicles moving over the treadle in one direction and to actuate the rearward counter to count axles of vehicles backing up over the treadle in the lane and moving in the opposite direction, printing means to make a printed record of the counts on said forward counter and said rearward counter, a printing slug with printing indicia thereon normally out of printing position with respect to said printing means, means operable to reverse said traffic signal system so that passage is allowed only in said opposite direction in said lane and stopped in the first direction, and means con-

trolled by said last means to move said printing slug with printing indicia thereon into printing position with respect to said printing means.

BENJAMIN COOPER.

References Cited in the file of this patent

UNITED STATES PATENTS

Number	Name	Date
1,835,234	McKeen	Dec. 8, 1931
2,008,909	Hershey	July 23, 1935
2,091,357	Goldsmith	Aug. 31, 1937
2,313,627	Cooper	Mar. 9, 1943
2,330,872	Diebold	Oct. 5, 1943
2,417,831	Kinkead	Mar. 25, 1947
2,482,610	Burn	Sept. 20, 1949
2,494,401	Meuriot	Jan. 10, 1950
2,528,790	Scherer	Nov. 7, 1950