Feb. 23, 1954

O. C. GRUENDER

2,670,142

ATTRITION MILL

Original Filed Aug. 4, 1947

7 Sheets-Sheet 1

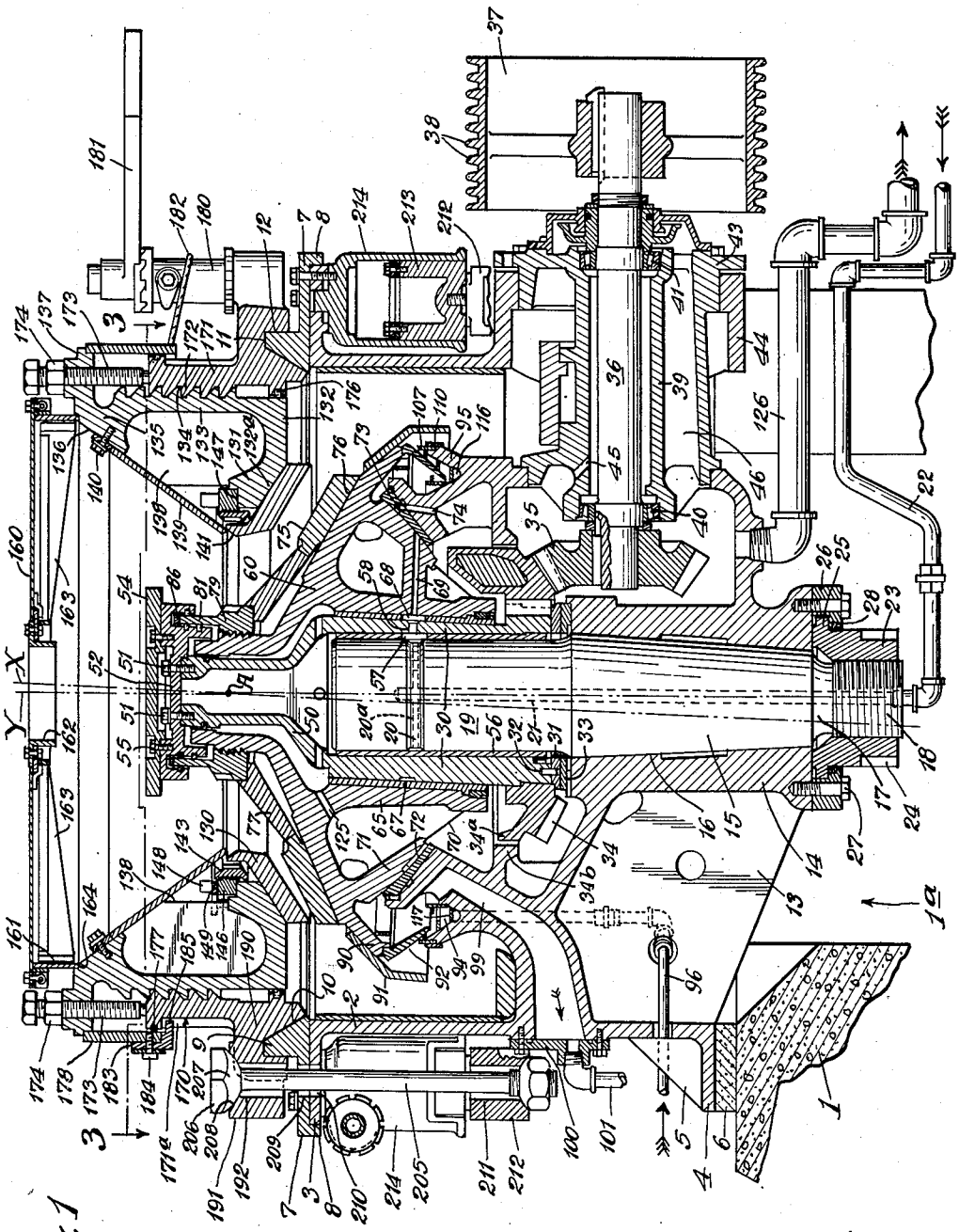

Fig. 1

Inventor
Oscar C. Gruender
by Parker & Carter
Attorneys

Feb. 23, 1954 O. C. GRUENDER 2,670,142

ATTRITION MILL

Original Filed Aug. 4, 1947 7 Sheets-Sheet 2

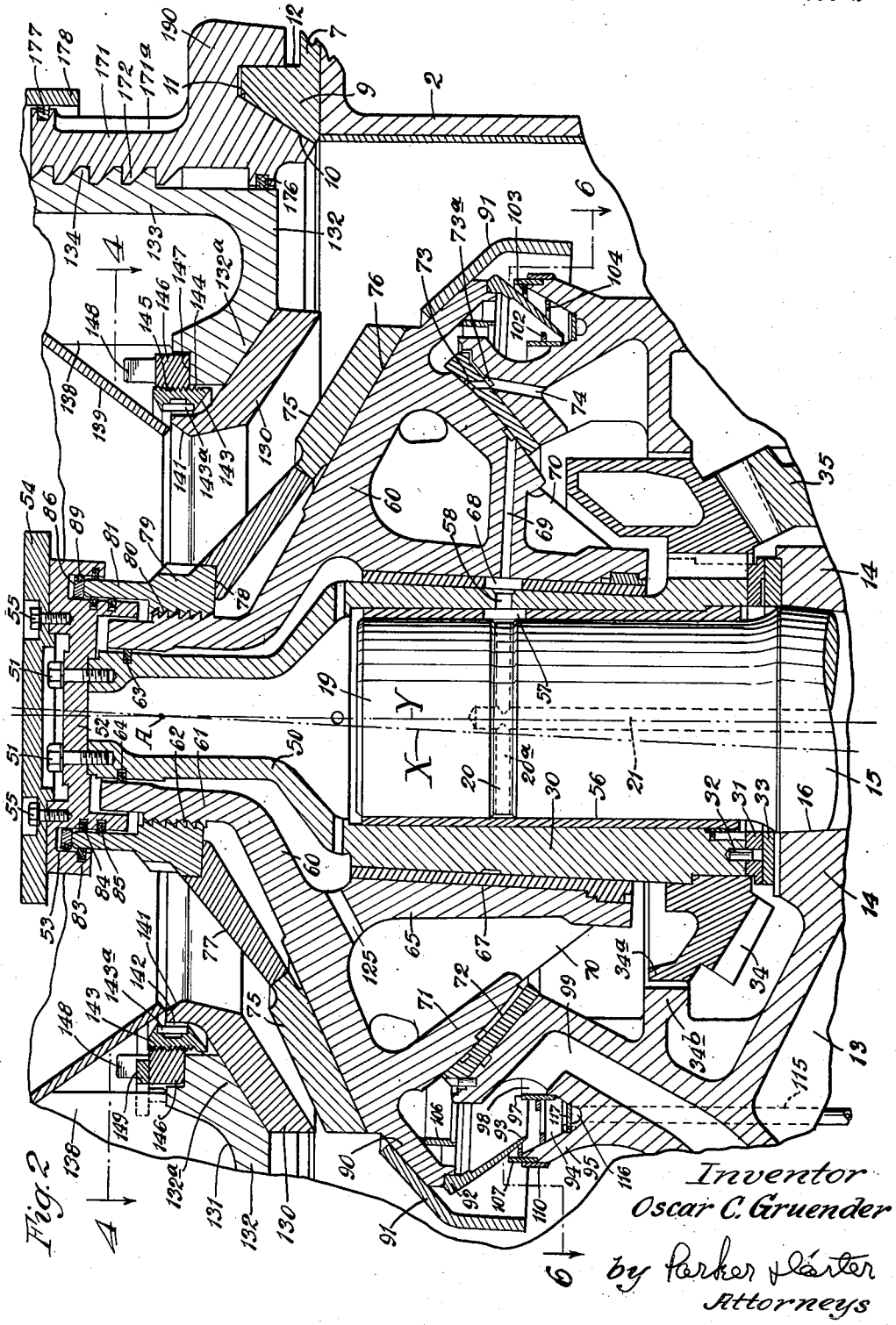

Fig. 2

Inventor
Oscar C. Gruender
by Parker & Carter
Attorneys

Feb. 23, 1954 O. C. GRUENDER 2,670,142

ATTRITION MILL

Original Filed Aug. 4, 1947 7 Sheets-Sheet 3

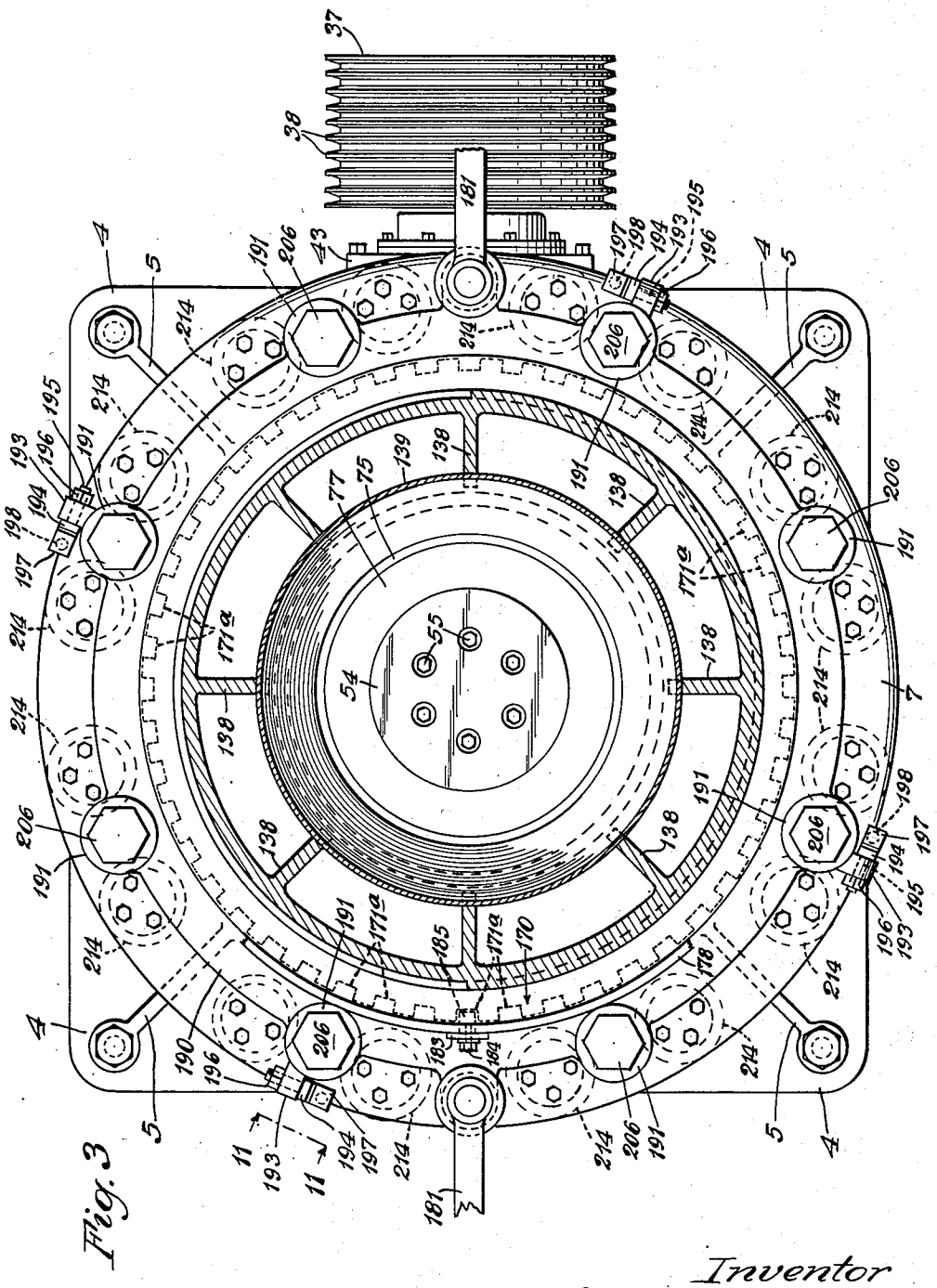

Fig. 3

Inventor
Oscar C. Gruender
by Parker Carter
Attorneys.

Feb. 23, 1954 O. C. GRUENDER 2,670,142

ATTRITION MILL

Original Filed Aug. 4, 1947 7 Sheets-Sheet 4

Fig. 4

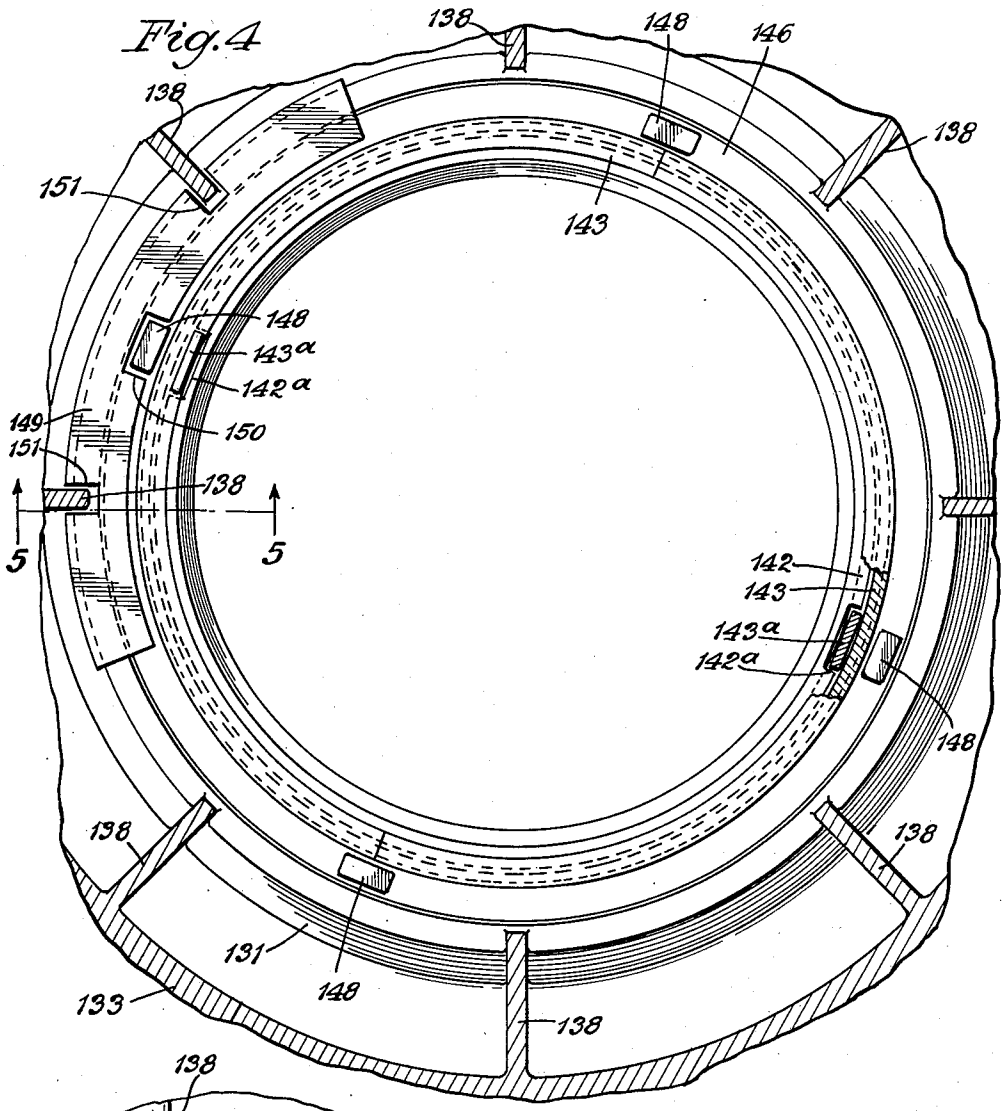

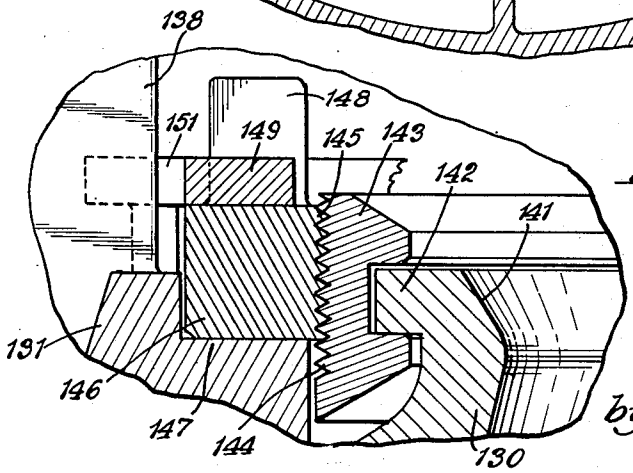

Fig. 5

Inventor
Oscar C. Gruender
by Parker & Carter
Attorneys.

Feb. 23, 1954

O. C. GRUENDER

ATTRITION MILL

2,670,142

Original Filed Aug. 4, 1947

7 Sheets-Sheet 5

Fig. 6

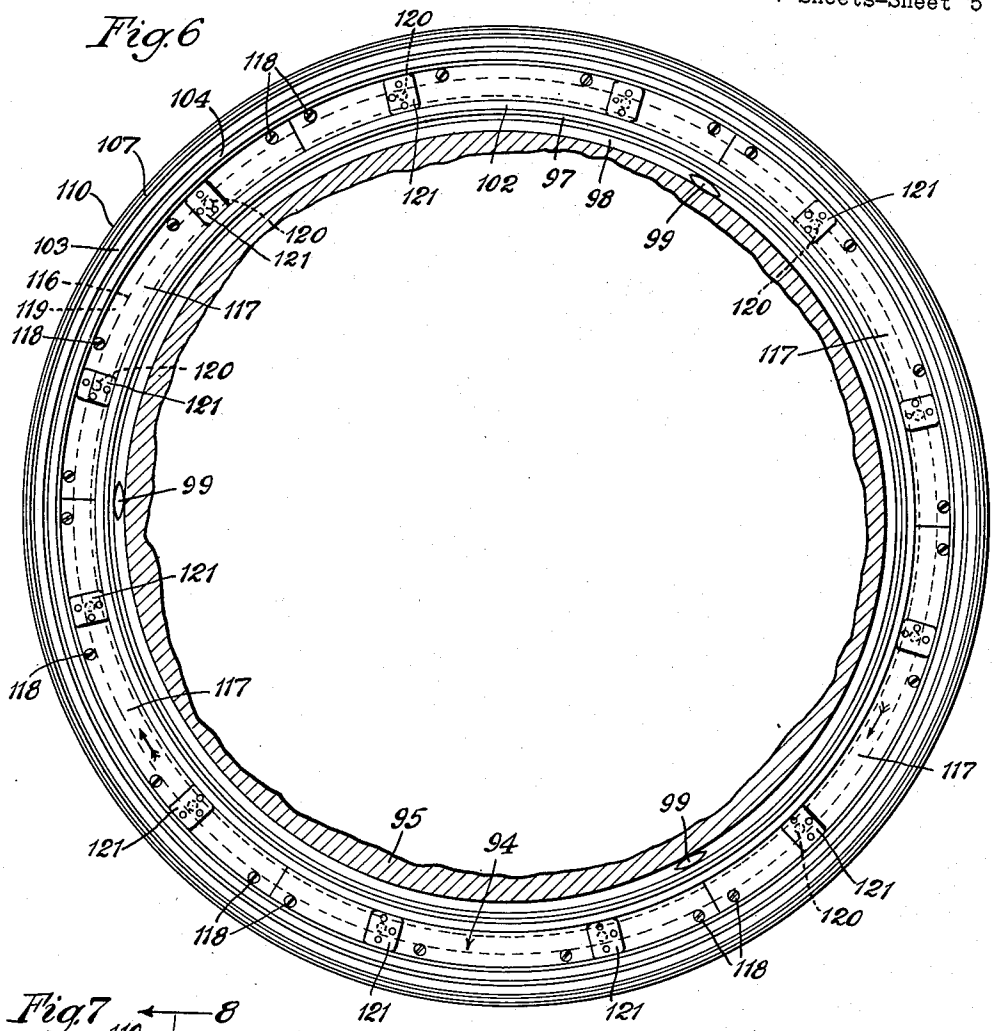

Fig. 7

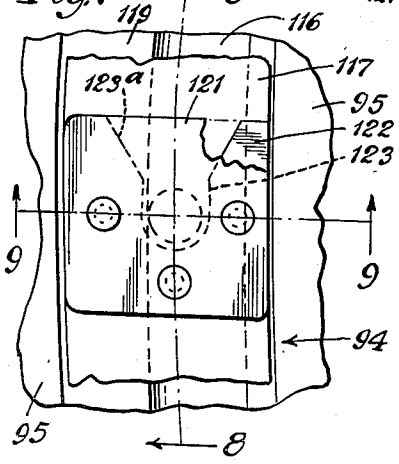

Fig. 8

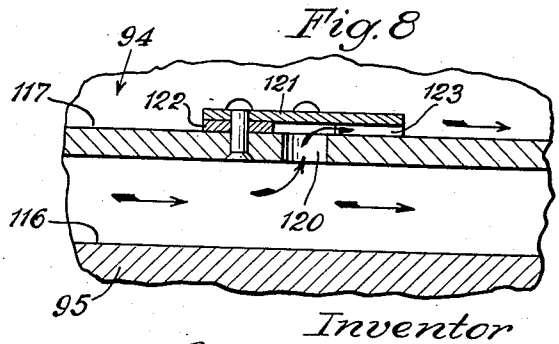

Inventor
Oscar C. Gruender

by Parker & Carter
Attorneys

Feb. 23, 1954

O. C. GRUENDER

ATTRITION MILL

2,670,142

Original Filed Aug. 4, 1947

7 Sheets-Sheet 6

Fig. 10

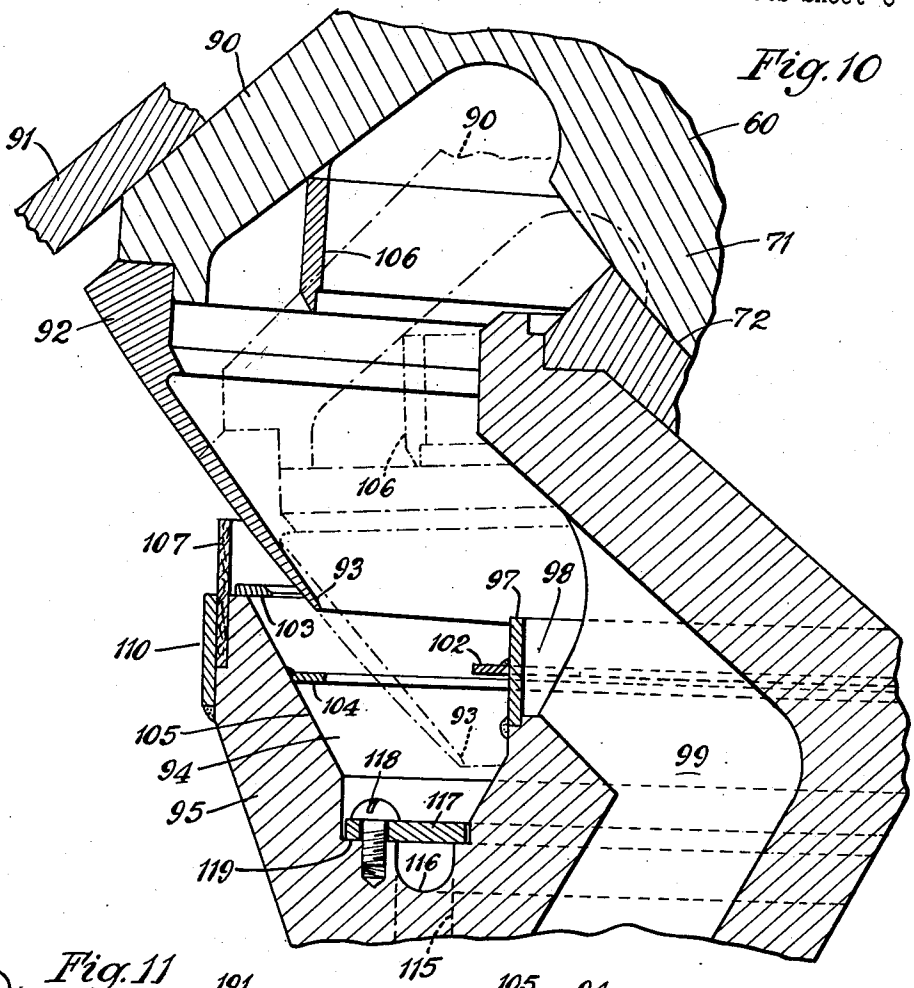

Fig. 11

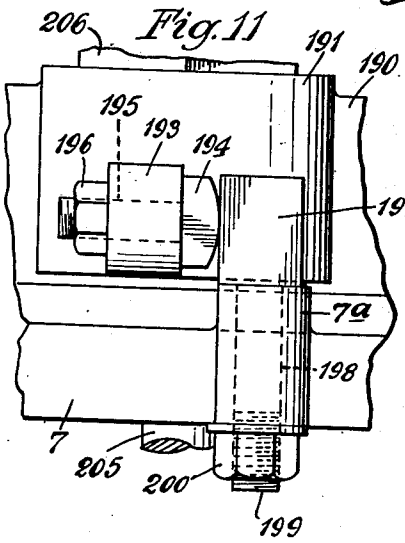

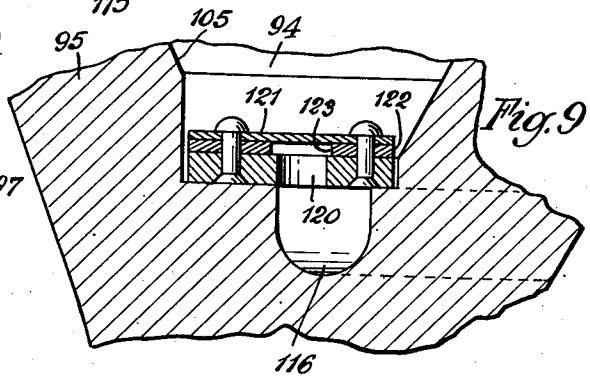

Fig. 9

Inventor
Oscar C. Gruender
by Parker & Carter
Attorneys

Feb. 23, 1954

O. C. GRUENDER

2,670,142

ATTRITION MILL

Original Filed Aug. 4, 1947

7 Sheets-Sheet 7

Fig. 12

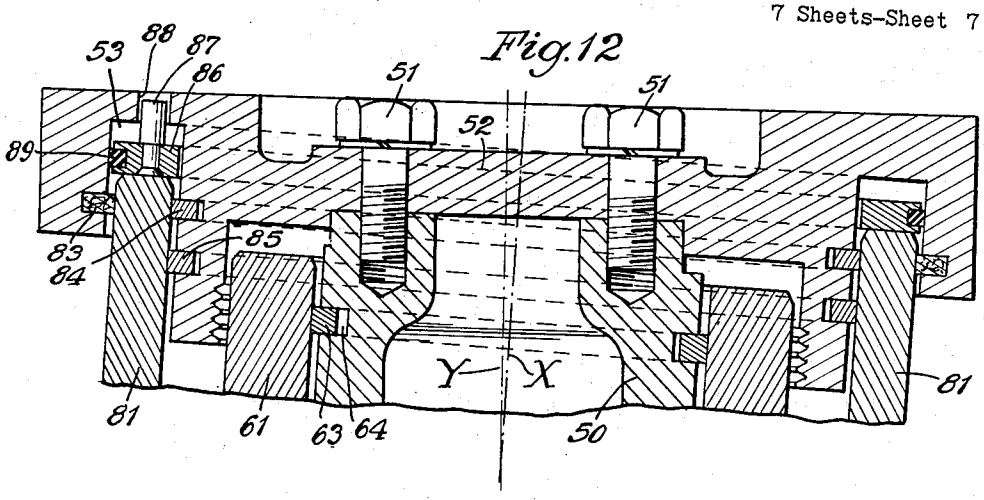

Fig. 13

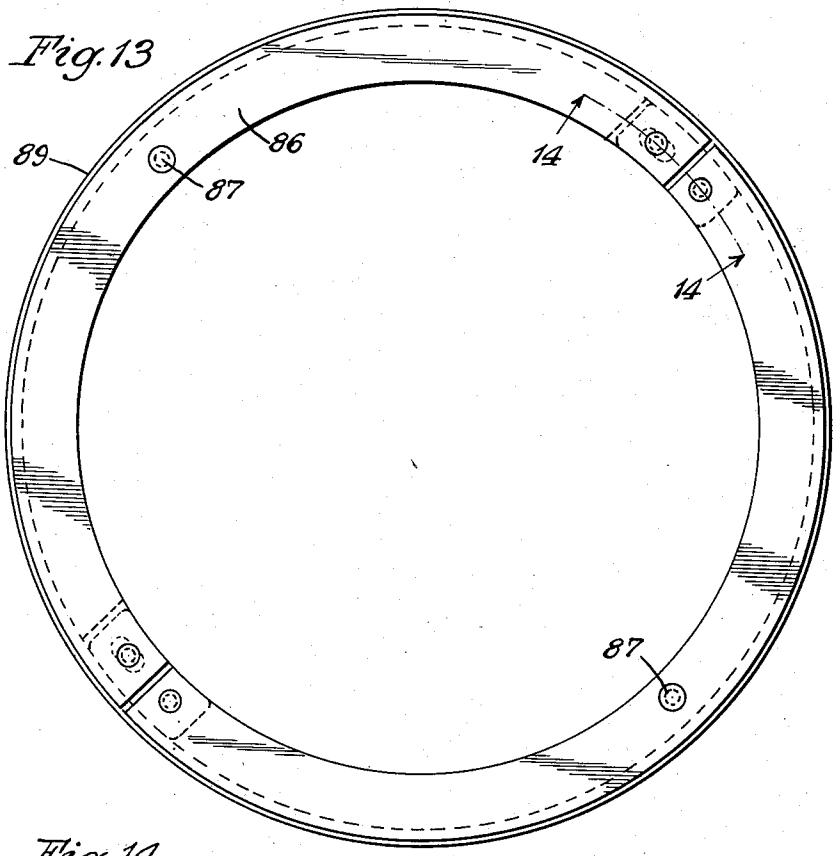

Fig. 14

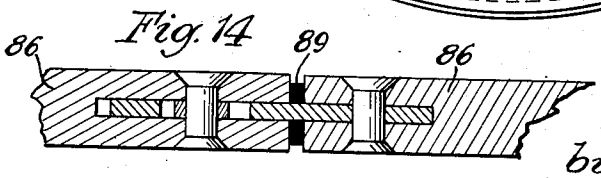

Inventor
Oscar C. Gruender
by Parker & Carter
Attorneys

Patented Feb. 23, 1954

2,670,142

UNITED STATES PATENT OFFICE

2,670,142

ATTRITION MILL

Oscar C. Gruender, Milwaukee, Wis., assignor to Nordberg Manufacturing Company, Milwaukee, Wis., a corporation of Wisconsin

Original application August 4, 1947, Serial No. 766,044. Divided and this application May 13, 1950, Serial No. 161,769

5 Claims. (Cl. 241—208)

1

My invention relates to an improvement in fine reduction or attrition mills.

One purpose is to provide an improved mill in which materials may be reduced to substantial fineness.

Another purpose is to provide an improved mill in which hard materials, such as ores, can be reduced to extremely fine sizes.

Another purpose is to provide an improved liquid seal for such mills.

Another purpose is to provide an improved main frame for such crushers and mills.

Another purpose is to provide an improved attrition liner.

Another purpose is to provide improved locking means for the attrition liner.

Another purpose is to provide improved centering and bearing means for the actuating eccentric of such mill or crusher.

Another purpose is to provide improved means for preventing rotation of the bowl of such a mill or crusher in relation to the main frame.

Another purpose is to provide improved lubricating means for such mill or crusher.

Another purpose is to provide improved sealing means for the top of the head and eccentric of such mill or crusher.

Another purpose is to provide a pneumatic release for such mill or crusher.

Other purposes will appear from time to time in the course of the specification and claims.

The present application is a division of my co-pending application Serial Number 766,044, now Patent #2,509,920 for Attrition Mill, filed in the United States Patent Office August 4, 1947. Another copending application, Serial No. 317,193, constitutes a continuation-in-part of the present application.

I illustrate the invention more or less diagrammatically in the accompanying drawings, wherein:

Figure 1 is a vertical axial section;

Figure 2 is a similar partial section on an enlarged scale;

Figure 3 is a section on the line 3—3 of Figure 1;

Figure 4 is a section on the line 4—4 of Figure 2;

Figure 5 is a section, on an enlarged scale, on the line 5—5 of Figure 4;

Figure 6 is a section on the line 6—6 of Figure 2;

Figure 7 is an enlarged detail of the structure shown in Figure 6;

Figure 8 is a section on the line 8—8 of Figure 7;

2

Figure 9 is a section, on an enlarged scale, on the line 9—9 of Figure 7;

Figure 10 is an enlarged detail, in vertical radial section, of the liquid sealing portion of the device;

Figure 11 is an end elevation taken along the line 11—11 of Figure 3;

Figure 12 is a partial vertical axial section through an upper portion of the feed plate structure;

Figure 13 is a detail of a sealing ring shown in Figure 12; and

Figure 14 is a section, on an enlarged scale, on the line 14—14 of Figure 13.

Like parts are indicated by like symbols throughout the specification and drawings.

Referring to the drawings, 1 generally indicates any suitable base upon which the crusher or attrition mill is mounted. 2 generally indicates a circumferentially extending main frame member having a top, outwardly extending, generally horizontal flange 3, and 4 is a bottom flange, the two flanges connected and strengthened by the vertical ribs or webs 5. 6 is any suitable grouting on base 1 and upon which the main frame is positioned.

Mounted on, and removably secured to the upper edge of the main frame, and overlying the flange 3, is a normally fixed abutment member or bowl supporting or receiving abutment ring 7 having a downwardly extending, circumferential outside flange 8 which surrounds and conforms to the edge of the flange 3. The ring has an inner, upwardly extending bowl abutment portion or bowl receiving flange 9, having a generally conic, outwardly tapered inner face 10, a flat top face 11, and a generally cylindrical outer face 12. 13 indicates three suitable U-shaped arm elements or inwardly extending radial ribs connecting and supporting the central hub 14.

Mounted within the hub 14 is the preferably somewhat conic central post 15 which conforms to a similarly formed inner face 16 of a generally central aperture of the hub 14. The post 15 has a downwardly reduced lower end portion 17, shown as screw-threaded as at 18. The post 15 has an upper and generally cylindrical portion 19, shown as provided with an exterior, circumferential oiling slot 20, and a horizontal oil passage 20*a*, which may suitably communicate with an axial oil passage 21 connected to any suitable oil delivery duct 22 from a suitable source of oil or lubricant.

23 is a nut, inwardly screw-threaded to receive the exterior threads 18 of the lower end of the shaft 15. It has vertical slots at the lower portion, as indicated at 24, and an upper, out-

wardly extending flange 25 in a supporting ring or securing member 26, removably secured to the lower end of the hub 14, as by any suitable securing bolts 27. Dust entrance is prevented by any suitable packing 28. It will be understood that when it is desired to remove the post 15, nut 23 is rotated in the opposite direction, causing the underside of the flange 25 to bear against the supporting ring 26. This results in an upward thrust on the threads of the post 15, freeing it from contact with the surface 16 of the hub 14. By continuous rotation of the nut, the post 15 is raised until the threads are no longer in engagement, permitting upward removal of the post. It will be understood that when the post is in position, it is fixed, and that the outer and generally spherical surface of its upper portion 19 constitutes a central support for the later described crushing head and its actuating means.

Surrounding the post portion 19 is an eccentrically apertured sleeve 30, which constitutes a unitary actuating member for gyrating the below-described crusher head and for rotating the below-described feed plate 54. It may be supported at its lower end as by a bearing ring 31 held against rotation in relation to the sleeve 30, as by pins 32. It rests upon the normally fixed bearing ring 33, suitably held against rotation in relation to the upper end of the sleeve 14. 34 is a bevel gear which may be keyed to the eccentric sleeve 30, which meshes with a pinion 35 on the drive shaft 36 rotated by a suitable exterior pulley 37, shown as channeled as at 38 to receive V-belts or other suitable driving means. The gear has a circumferential vertical flange 34*a* located within the circumferential ring 34*b*, integral with the arms 13. In the event of shaft failure, the gear and eccentric will move only slightly laterally, because the flange 34*a* will prevent such lateral displacement. Any suitable bearing assembly may be employed for the shaft 36. I illustrate a surrounding sleeve 39 carrying suitable bearing units 40 and 41 at its opposite ends. 42 generally indicates any suitable sealing structure. The sleeve 39 is shown as having an exterior closure flange 43, with which it is integral, which fits in and closes an aperture surrounded by any suitable sleeve 44, forming part of the main frame circumferential wall 2. 45 is an oil supply passage, and 46 a suitable oil removal passage.

It will thus be clear that, in response to belts engaging the drive pulley 37, the eccentric sleeve 30 will be rotated about the upper central post portion 19. The eccentric sleeve 30 is shown as having an upwardly extending portion 50, the upper end of which is shown in greater detail in Figure 12. Secured to it, as by screws 51, is a feed plate 52 having a circumferentially extending, downwardly faced slot 53. As will be clear from Figure 12, this slot is described about a center, indicated at X, which is eccentric to the center Y, about which the eccentric sleeve 30 rotates. The result of the rotation of the eccentric sleeve 30 is a rotation of the plate 52.

Any suitable top wear plate 54 may be secured to the plate 52, as shown in Figure 1, as by suitable screws 55. Thus material dropped upon the top of the feed plate 54 will be laterally, centrifugally thrown, as will later appear.

56 is any suitable bearing sleeve between the outer surface of the post 19 and the inner surface of the eccentric sleeve 30. It may be apertured as at 57 for the admission of oil, such aperture being aligned with the oil aperture 58 extending generally radially through the eccentric sleeve 30.

60 generally indicates a gyrated crushing head which is gyrated about the center, in Figures 1 and 2, at A. It includes an upwardly extending hollow stem portion 61, externally screw-threaded as at 62. 63 is a sealing ring bearing against the inner surface of the hollow stem 61, but seated in a circumferential, outwardly opening slot 64 in the upper end portion 50 of the eccentric sleeve 30. It will be noted that the slot 64 is normal with the inclined axis X, and lies in a plane slightly inclined from the normal in relation to the center Y.

The head 60 is provided with a downwardly extending sleeve portion or bearing sleeve 65 which surrounds the eccentric sleeve 30 and is separated from it by any suitable wear-taking sleeve or liner 67 with its oil-passing aperture 68 aligned with an oil passage 69 in the lower portion of the head 60. The head also includes any suitable connecting webs 70 and a spherical bearing portion 71, the exterior and generally spherical bearing surface of which rest upon any suitable upwardly concave bearing or spherically surfaced supporting ring 72 mounted on an intermediate portion or extension of the main frame 2, as shown in Figure 1, which surrounds, but is outwardly spaced from, the post portion 19. 73 is an annular oiling passage in the ring 72. Oil holes connect this passage with the annular oiling passage 73*a*, and oil holes 74 conduct the oil to the interior of the machine. It will be noted that the inner surface of the sleeve 65 is inclined in relation to the center Y, but is concentric with the center X. It will be understood that as the eccentric sleeve rotates, it imparts to the head 60 a gyratory movement about the center A.

75 indicates a crushing or attrition member or somewhat conic die or mantle resting upon an appropriately formed upper supporting surface 76 of the head 60. The die 75 is held in position by a generally conic positioning thrust member or sleeve 77 which is formed at its upper edge, as at 78, to receive a locking member or thrust ring or securing nut 79. The thrust ring or nut 79 is inwardly threaded, as at 80, to conform to the exterior threads 62 of the upper hollow stem portion 61 of the head 60. The ring or securing nut 79 is also provided with an upwardly extending sealing ring portion 81 which extends into the circumferential, downwardly opening annular channel or groove 53 in the lower surface of the plate 52. Suitable sealing rings or packings are provided, as at 83, 84 and 85, received in appropriate annular recesses, whereby the ring 81 is sealed at both sides. An upper sealing member or ring 86 is positioned in the slot 53 and is held against rotary movement, as by suitable positioning pins 87 extending into apertures 88 in the upper part of the plate 52. The ring 86 is provided with an exterior sealing member 89, which may be of rubber.

It will thus be understood that whereas the head 60 may gyrate about the center A, in response to rotation of the eccentric sleeve 30, leakage of oil from the inside to the outside is prevented, and also the inward penetration of dust particles from without. Nevertheless, the plate 52 and its outer wear-taking feed plate 54 may rotate in unison with rotation of the eccentric sleeve 30, whereas the head 60 and its wear-taking die 75, rotate only slightly, as they gyrate.

The head 60 is provided with an outwardly extending portion 90 upon which the exterior apron 91 may be secured. 92 indicates the downwardly

and inwardly extending guard secured to the outer edge of the portion 90 of the head. Its lower edge 93 extends into a gutter 94 formed in the circumferentially extending annular portion 95 of the main frame. A suitable liquid, such as water, is delivered to the gutter 94, for example, along any suitable duct 96, a constant circulation of water being maintained. The water tends to fill the gutter 94 and to flow thereabout, overflowing inwardly over the edge of the inner dam 97. This dam may be in the form of a circumferentially extending ring defining the space 98 from which one or more outlet passages 99 may extend. Such passages are shown in Figures 1, 2 and 10, and are directly above the U-shaped arms 13.

In Figure 1 is indicated a closure plate 100 through which water may flow along any suitable discharge pipe 101. As will be clear from Figure 10, I may provide any suitable splash-preventing elements. I illustrate, for example, a horizontal ring 102 extending outwardly intermediate the upper and lower edges of the dam 97. I illustrate, also, inwardly extending rings 103 and 104 inwardly extending from the outer inclined wall 105 of the gutter 94. I illustrate a vertical ring 106, shown as generally cylindrical and as downwardly depending from a lower portion of the head extension 90. In addition, I illustrate the surrounding and preferably flexible packing ring 107, upwardly extending from the upper outer edge of the gutter 94 and held and protected by a circumferentially extending metal ring 110.

In order to cause a positive movement of the water along the bottom of the gutter 94 I provide the following structure. The water inlet passage 96 delivers water through a duct 115 to an annular passage 116 located beneath the bottom of the gutter 94 and closed by a plate or plates 117 secured in position, for example, by suitable screws 118. It will be noted that the screws enter the upper surface of a ledge 119, located at one side of the passage 116, as shown in Figure 10. The water which is delivered to the passage 116 along the duct 115 may escape through the plate or plates 117 through one or more upwardly extending discharge passages 120. These passages are partly closed by deflector plates 121 spaced upwardly from the uper surface of the member 117, as by spacers 122, which leave a free space 123, as shown in Figure 8. With water being delivered under pressure to the passage 116, and escaping through the outlets 120, the escape passage 123 delivers water along the bottom of the gutter 94; that is to say, along the upper surface of the plate or plates 117, in the direction of the arrows of Figure 8. The result is a positive circulation of water along the bottom of the gutter 94, the water so circulating tending to swirl and scour, and remove foreign particles. These particles, so far as they penetrate over the upper edge of the member 107, and into the interior of the gutter 94, are therefore carried over the upper edge of the dam 97 and are removed along the passages 99 and the discharge ducts 101. Note, as in Figure 7, that the outlet 123 may be somewhat outwardly flared, as at 123a.

As many of the discharge passages may be employed as is convenient or necessary, twelve being shown in Figure 6. Whereas the number may be varied to suit the needs of a particular situation, I find that a structure with twelve of the delivery passages 123 and three of the outlet passages 99 works efficiently. Thus, when the eccentric

sleeve 30 is rotated, and the feed plate 54 is rotated, and the die 75 is gyrated, there is no perceptible entry of dust into the necessary series of bearings. And oil may be delivered from any suitable source, along the oil inlet duct 22, and may flow through the above-described oil ducts and such additional ducts as are shown at 125, etc., back to the oil return pipe 126.

Opposed to the attrition die 75 is the upper attrition liner or ring 130. It will be noted that the opposed surfaces of the members 75 and 130 are generally conic, but converge somewhat toward the outlet or lower and outer end of the attrition zone defined between the two members. The bowl liner 130 is mounted on a tiltable or releasable bowl and support, which will now be described. The bowl structure proper, indicated at 131, has a bottom web or portion 132 and a preferably integral outer cylindrical portion 133, exteriorly screw-threaded, as at 134, and having an upper annular portion 135 with a more or less conic inner surface 136 and an outwardly extending top flange 137. It is provided, also with generally radial ribs 138 having upper edges which downwardly and inwardly prolong the conic surface 136, and which receive a conic feed hopper or feed directing ring 139, removably secured, as by members 140, to the surface 136, and overlying the upper inner edge of the bowl liner 130. It will be noted that the liner 130 has an upwardly extending annular portion 141 with an outwardly extending top flange 142 which may be apertured or provided with exteriorly open notches 142a. Keys 143a are secured to a split or segmental threaded locking ring 143, the keys entering the exterior notches 142a, preventing rotation of the locking ring in relation to the member 130.

The ring 143, in turn, is externally screw-threaded, as at 144, to conform to interior threads 145 on the annular locking member 146 which seats in a recess or on a shelf 147 on an upwardly and inwardly extending bowl bottom portion 132a. The ring 146 has upwardly extending lugs 148 adapted to be received in notches 150 in segmental locking plates 149. The plates 149 have external notches 151 adapted to engage forward edges of the bowl. Thus, since the ribs 138 are fixed, the locking plates 149, when in the position in which they are shown in Figures 2 and 4, prevent any rotation of the ring 146. This, in turn, holds the bowl liner 130 upwardly drawn against the conic surface of the bowl portion 132a. However, when removal of the liner 130 is desired, it is a simple matter to lift the locking plate 149 upwardly out of locking position, and to knock the ring 146 to the released position, by operating a tool or hammer against the upwardly extending lugs 148. The deflector gutter 139, meanwhile, both protects the above described structure and directs the feed downwardly and inwardly toward the attrition zone between the members 75 and 130.

Any suitable feed-directing or limiting means 160 may be employed, as shown in Figure 1. It may include, for example, an outer circumferential ring 161, an inner and feed aperture defining ring 162, and suitable reinforcing or connecting members 163. The structure, as a whole, may rest upon the portion 135 of the bowl structure, being centered in any suitable shelf or circumferential ledge 164.

The bowl structure proper is adjustably mounted in a bowl support, generally indicated as 170. It includes a generally cylindrical inner portion

171, inwardly screw-threaded, as at 172, to conform to the exterior threads 134 of the bowl wall 133. The bowl may be raised or lowered by a relative rotation of the portions 133 and 171. When the adjustment has been made, the parts may be locked against relative rotation by the locking or thrust screws 173 which pass through the flange 137, and may be locked in position as by lock nuts 174. Any suitable packing or dust guard means may be employed, as at 176 and 177. The outer dust guard 177 bears against the inner surface of the cylindrical ring 178 which may be welded or otherwise secured to the exterior of the bowl portion 137.

It will be understood that any suitable means may be employed for imparting relative rotation, for adjustment purposes, to the members 171 and 133. I illustrate, for example, the windlass 180 with its actuating handle 181 and its flexible element 182. The details of this structure do not, of themselves, form part of the present invention, and will not be further described, it being understood that any suitable means may be employed for imparting an adjusting rotation to the member 133 in relation to the member 171. It will be understood that the exterior of the member 171 is provided with a plurality of vertical recesses 171*a*. I may lock the parts against relative rotation by a suitable removable locking block 183, shown in Figure 1 as removably secured to a lower portion of the ring 178, as by any suitable locking screw 184. The member 183 has an inwardly extending lug 185 adapted to enter one of the slots or channels 171*a*.

The portion 171 has an outwardly extending bottom flange 190 with a plurality of lateral arcuate edged bosses or enlargements 191 apertured, as at 192, to receive tension rods, which will later be described, but which permit the ring support structure to tilt upwardly away from the flange 9, against which it normally seats, when tramp iron or uncrushable material is present in the crushing or attrition zone. In order to prevent rotation of the bowl support and to insure that the parts seat or are centered properly when the bowl support drops back into the normal position in which it is shown in Figure 1, I provide a plurality of lugs 193, outwardly extending from some of the bosses 191 and carrying an arcuate surfaced abutment 194 which may be the head of a removable screw or bolt 195, held in position, for example, by a nut 196, as shown in Figure 11. The arcuate or domed surface of the member 194 abuts against a positioning pin 197, suitably hardened, which is removably positioned on the flange 7. It may, for example, pass through a boss 7*a*, and have a reduced shank 198, the lower end of which is screw-threaded, as at 199, to receive any suitable securing nut 200.

The bowl support 171 may normally be held in the position in which it is shown in Figure 1, by any suitable releasable means. I illustrate, for example, the tension rods 205 which pass through the apertures 192 and have enlarged upper holding heads 206, downwardly domed as at 207, to engage seating pockets 208 which surround the upper ends of the apertures 192 through the bosses 191. These pockets perform a centering function, as is shown in Figure 1, whereby the member 205 is kept out of contact with the walls of the apertures 192, with a consequent prevention of wear.

The flanges 3 and 7 are apertured, as shown

at 209 and 210, to clear the member or rod 205. The rods extend downwardly through suitable apertures 211 in any suitable yoke or yokes 212, normally held in downward position by thrust pistons 213 in suitable cylinders 214 secured to the lower surface of the main frame flange 3. It will be understood that a suitable liquid or fluid, under proper pressure, is delivered to the interior of the piston structure so formed, in such fashion that the downward thrust against the member or members 212 normally exceeds the crushing or attrition stress. But when a predetermined crushing or attrition stress is exceeded, or when uncrushable material passes through the crushing zone defined between the members 75 and 130, then the bowl structure can tilt upwardly without breakage. It will be understood that when the pressure within the cylinder structure is released, the entire bowl structure may readily be upwardly removed, either for repair or replacement, or to clear the uncrushable material from the crushing cavity. The details of the pressure maintaining means are not herein shown, since they do not, of themselves, form part of the present invention, and are shown and described in my earlier filed, copending application Serial No. 697,227 now abandoned, Pneumatic Release for Cone Crushers, filed in the United States Patent Office on September 16, 1946.

It will be realized that, whereas, I have described and illustrated a practical and operative device, nevertheless many changes may be made in the size, shape, number and disposition of parts without departing from the spirit of my invention. I therefore wish my description and drawings to be taken as in a broad sense illustrative or diagrammatic, rather than as limiting me to my precise showing.

The use and operation of the invention are as follows:

I illustrate an attrition or reduction mill in which a gyrated head gyrates about a predetermined center A within a normally fixed bowl. The method carried out in my mill is described and claimed in my copending application Serial No. 766,043, now Patent No. 2,509,919 Method of Reduction by Attrition, filed in the United States Patent Office on August 4, 1947.

It will be understood that whereas I have illustrated a grinder or fine reduction mill, nevertheless many of the features herein shown may be employed in connection with gyratory crushers in which a head is gyrated within a bowl. Thus the means for gyrating the head is equally applicable to coarse and fine reduction gyratory crushers, and the feature of a rotated feed plate, in connection with a gyrated head, properly lends itself to use with fine, intermediate, and coarse gyratory crushers. The same is true of the water-seal above described.

In considering the general application or operation of the various features above described, I employ a normaly fixed central post 19 about which the eccentric sleeve 30 rotates. The eccentric sleeve performs the double function of gyrating the head 60 and of rotating the feed plate 54. The material passing through the attrition or crushing zone is reduced by the gyratory movement of the head 60, the material being actually engaged by the die 75 and the liner 130. The water seal is advantgaeous in that water is caused to rotate in the trough or gutter 94. The various outwardly extending flanges or rings, as shown in Figures 2 and 10, prevent

splashing of the water and escape of the water outwardly over the edge of the trough or gutter 94. The rotation of the water in the gutter or trough causes it to adhere to the walls, and this surface tension lessens the tendency of the water to partake of the gyratory movement of the member 92 or of any part associated with the head itself.

The sealing ring 86, shown as expansible in Figures 13 and 14, located in the top plate 52, is preferably formed in halves, and rotates with the feed plate support 52, through the medium of the pins 87. A rubber ring or washer 89 is fitted into an exterior recess in the ring halves 86. When the ring halves 86 rotate, with the feed plate support 52, centrifugal force urges each half outwardly, causing it to urge the rubber ring or washer 89 against the outer wall of the slot 53 of the feed plate support 52. Thus the ring does not bear heavily against the contacting face of the head nut or its upward extension 81. The rubber ring 89 further effects a perfect seal against the entrance of dust at the outer diameter of the ring. And since the ring 86 bears against the top of the head nut, no dust can enter underneath the ring. The ring halves 86 may be made of a lead-base bronze, and no lubrication is required. No matter what wear takes place to change the vertical position of the ring 86 in respect to the contacting parts, it will automatically find its new position, and function effectively to seal the top of the machine against the entrance of dust.

The above-described means for holding the die 75 in place are of the self-tightening type. The nut 79 is threaded to engage the exterior threads 62 on the head, and bears against the intermediate members 77, which contact the thrust downwardly and outwardly against the die 75, holding it constantly firmly in position. The upper attrition member or liner 130 is also of the self-tightening type, because the threaded locking ring 143 is forced to rotate with it.

It will be understood that my improved main frame and my improved main shaft or central post structure while useful in connection with the attrition mill described and claimed in my copending application Serial No. 766,043, Method of Reduction by Attrition, filed in the United States Patent Office on August 4, 1947, and in my copending application Serial No. 766,044, Attrition Mill, filed in the United States Patent Office on August 4, 1947, may advantageously be used in connection with gyratory crushers in general.

I claim:

1. In a crusher or attrition mill, a circumferential outer frame member, a hub therewithin, unitary generally radial structural elements connecting the hub and the circumferential outer frame member, said hub having a generally conic upwardly enlarging bore extending therethrough and open at top and bottom, the wall of said bore being unitary with the hub and being circumferentially unbroken, a normally fixed crusher shaft having an unsupported upper end and a lower portion tapered to conform to the internal tapered conic surface of the hub and having an upwardly extending generally cylindrical portion free at its upper end, the two portions of the shaft being generally of equal length, means for urging the shaft downwardly against and within the solid tapered conic surface of the hub in firm locking relationship, including a nut abutting the bottom of the hub and having a screw threaded aperture, the shaft having a downwardly extended screw threaded end portion adapted for screw threaded engagement with the nut, and means for securing the nut to the hub including a circumferential member secured to the hub, the nut having an upper, circumferential portion extending outwardly into a space between the hub and such holding member, the nut having an exposed downwardly extending portion below said holding member adapted to receive actuating means.

2. In a replaceable abutment for crusher or attrition mills having a circumferential main frame member with a top flange and a bowl supporting tilting ring positioned above the main frame member, a one-piece abutment ring having a generally horizontally extending body portion with a downwardly extending circumferential centering flange about the outer edge of said body portion, said flange being positioned and adapted to engage the outer edge of the top flange of such main frame member in a centering relationship, said ring body portion having adjacent its inner edge an upwardly extending centering flange for the bowl supporting tilting ring, said flange having a generally cylindrical outer surface and an upwardly expanding, tapered inner surface, said abutment ring being apertured to permit the passage of securing elements downwardly therethrough.

3. In a sealing assembly for a crusher or attrition mill having a circumferential outer frame member and a gyratory head therewithin and means for gyrating it about a predetermined center, a circumferential open-topped liquid receiving trough positioned within said main frame at a level substantially below the center about which the head is gyrated, said trough having circumferential outer and inner walls, duct means for delivering a sealing liquid to the trough, a skirt movable with the head and having its lower edge portion extending downwardly into said trough, at all positions of the head, to a level below the upper surface of the liquid in the trough, the outer wall having an upper edge located at a level above the level of liquid in the trough, the movable skirt being at all positions of the head closely adjacent and in part above the upper edge of the outer wall, whereby entry of dust is substantially prevented, the inner wall having a circumferential spillway edge lower than the outer wall, the line of entry of the skirt into the liquid being substantially nearer the outer wall than the inner wall, and a discharge outlet located inwardly of the inner wall, positioned and adapted to receive the liquid which overflows the inner wall, whereby the outlet is at all times shielded by the penetration of the skirt into the liquid, the circumferential spillway of the inner wall being effective to maintain a predetermined level of liquid in the trough.

4. The structure of claim 3 characterized by and including at least one generally horizontal fixed circumferential baffle ring extending from an internal surface of one of the trough walls at a level below the upper surface of the liquid in the trough, and substantially above the bottom of the trough.

5. The structure of claim 3 characterized by and including a plurality of fixed generally horizontal circumferential baffle rings projecting inwardly from the opposite side surfaces of the trough walls at levels below the upper surface of the liquid in the trough, said baffles being ar-

ranged in staggered relationship, and being substantially above the bottom of the trough.

OSCAR C. GRUENDER.

References Cited in the file of this patent

UNITED STATES PATENTS

Number	Name	Date
243,545	Gates	June 28, 1881
271,138	Sharpneck	Jan. 23, 1883
652,208	Hadfield	June 19, 1900
768,955	Russell	Aug. 30, 1904
1,029,742	Capen	June 18, 1912
1,145,629	Symons	July 6, 1915
1,226,275	Symons	May 15, 1917
1,309,104	Sanborn	July 8, 1919
1,402,255	Sanborn	Jan. 3, 1922
1,537,564	Symons	May 12, 1925
1,553,202	Symons	Sept. 8, 1925
1,791,584	Symons	Feb. 10, 1931
1,817,044	Symons	Aug. 4, 1931
1,863,529	Symons	June 14, 1932
1,868,338	Symons	July 19, 1932
2,017,108	Symons	Oct. 15, 1935
2,054,326	Jacobson	Sept. 15, 1936
2,091,315	Gruender	Aug. 31, 1937
2,132,508	Campbell	Oct. 11, 1938
2,135,324	Brown	Nov. 1, 1938
2,147,833	Fahrenwald	Feb. 21, 1939
2,158,779	Rumpel	May 16, 1939
2,223,956	Gruender	Dec. 3, 1940
2,254,425	Fahrenwald	Sept. 2, 1941
2,288,069	Browning	June 30, 1942
2,305,616	Gruender	Dec. 22, 1942
2,306,437	Gruender	Dec. 29, 1942
2,310,737	Gruender	Feb. 9, 1943
2,341,543	Gruender	Feb. 15, 1944
2,350,737	Eiben	June 6, 1944
2,359,987	Gruender	Oct. 10, 1944
2,409,391	Rumpel	Oct. 15, 1946

FOREIGN PATENTS

Number	Country	Date
850,650	France	Sept. 18, 1939
656,857	Germany	Feb. 17, 1938