APPARATUS FOR CEMENTING WELLS

Filed Feb. 9, 1949 5 Sheets-Sheet 1

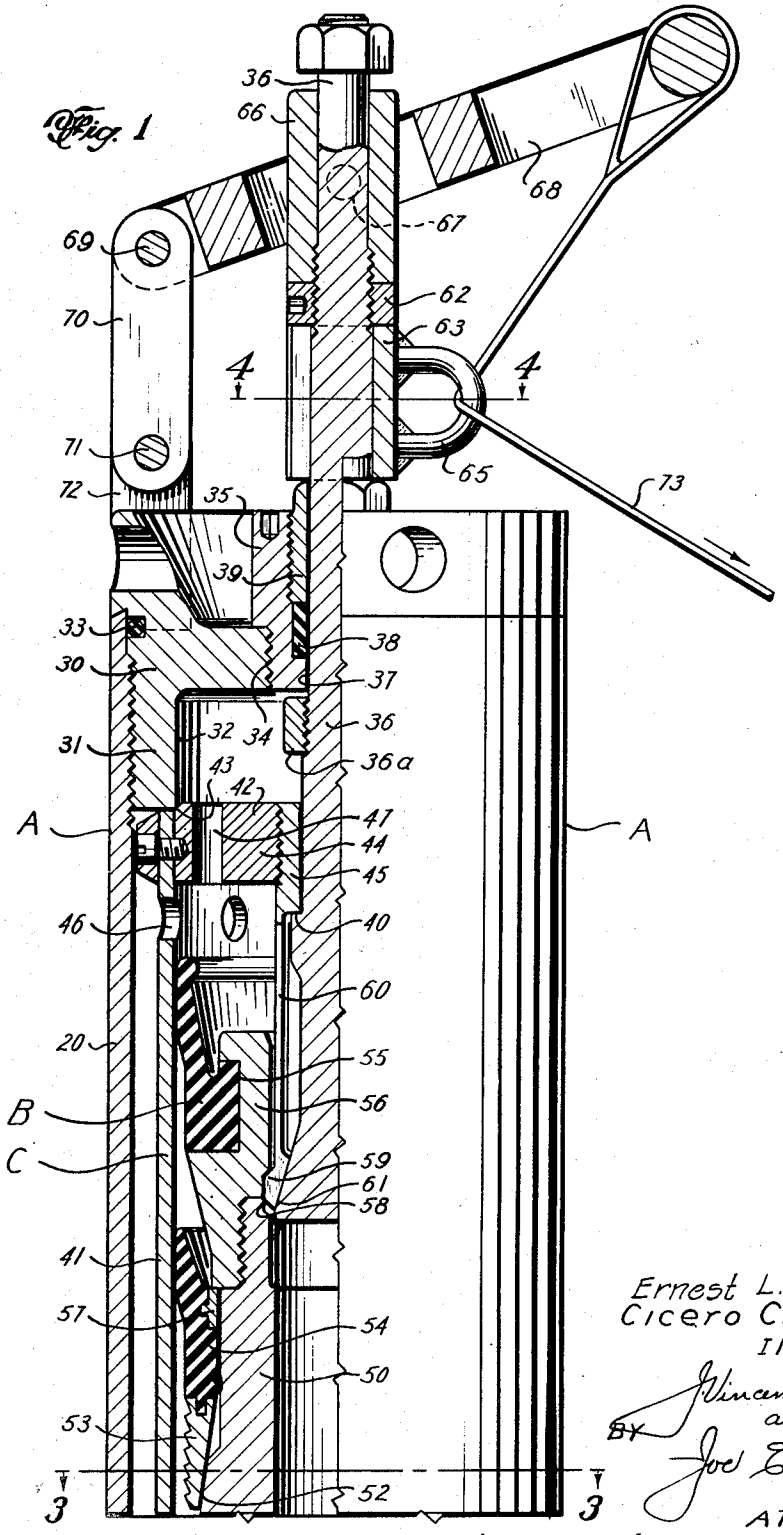

Ernest L. Potts
Cicero C. Brown
INVENTORS
BY Vincent Martin
and
Joel E. Edwards
ATTORNEYS

APPARATUS FOR CEMENTING WELLS

Filed Feb. 9, 1949 5 Sheets-Sheet 2

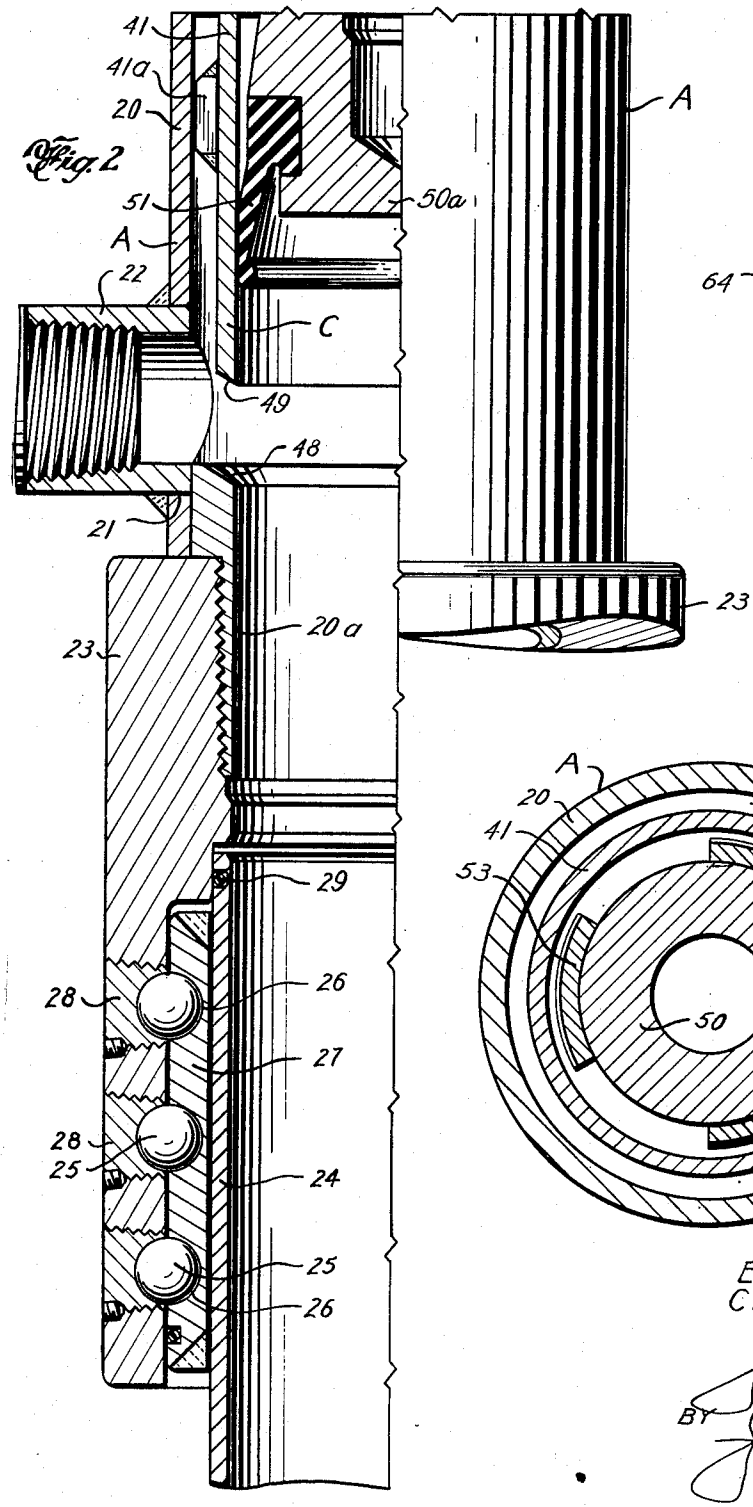

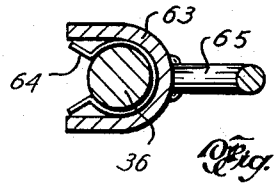

Fig. 4

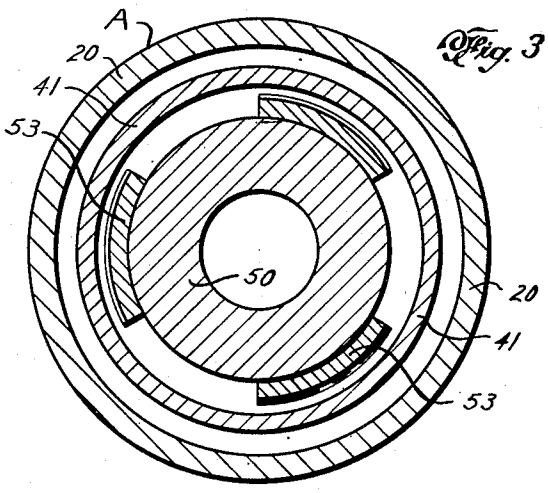

Fig. 3

Ernest L. Potts
Cicero C. Brown
INVENTORS
BY Vincent Martin
and
Joel E. Edwards
ATTORNEYS

APPARATUS FOR CEMENTING WELLS

Filed Feb. 9, 1949 5 Sheets-Sheet 3

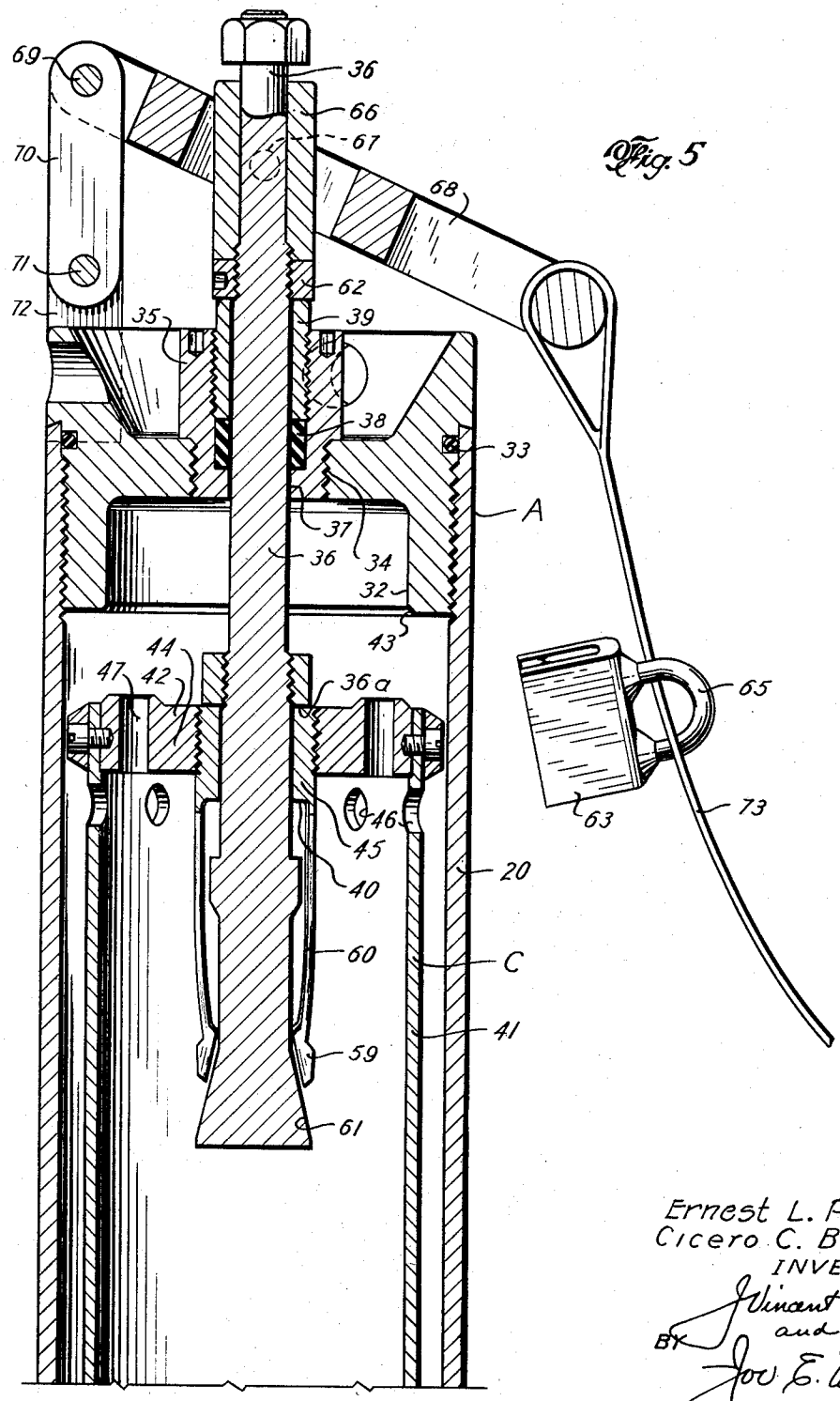

Fig. 5

Ernest L. Potts
Cicero C. Brown
INVENTORS
BY Vincent Martin
and
Joe E. Edwards
ATTORNEYS

APPARATUS FOR CEMENTING WELLS

Filed Feb. 9, 1949 5 Sheets-Sheet 4

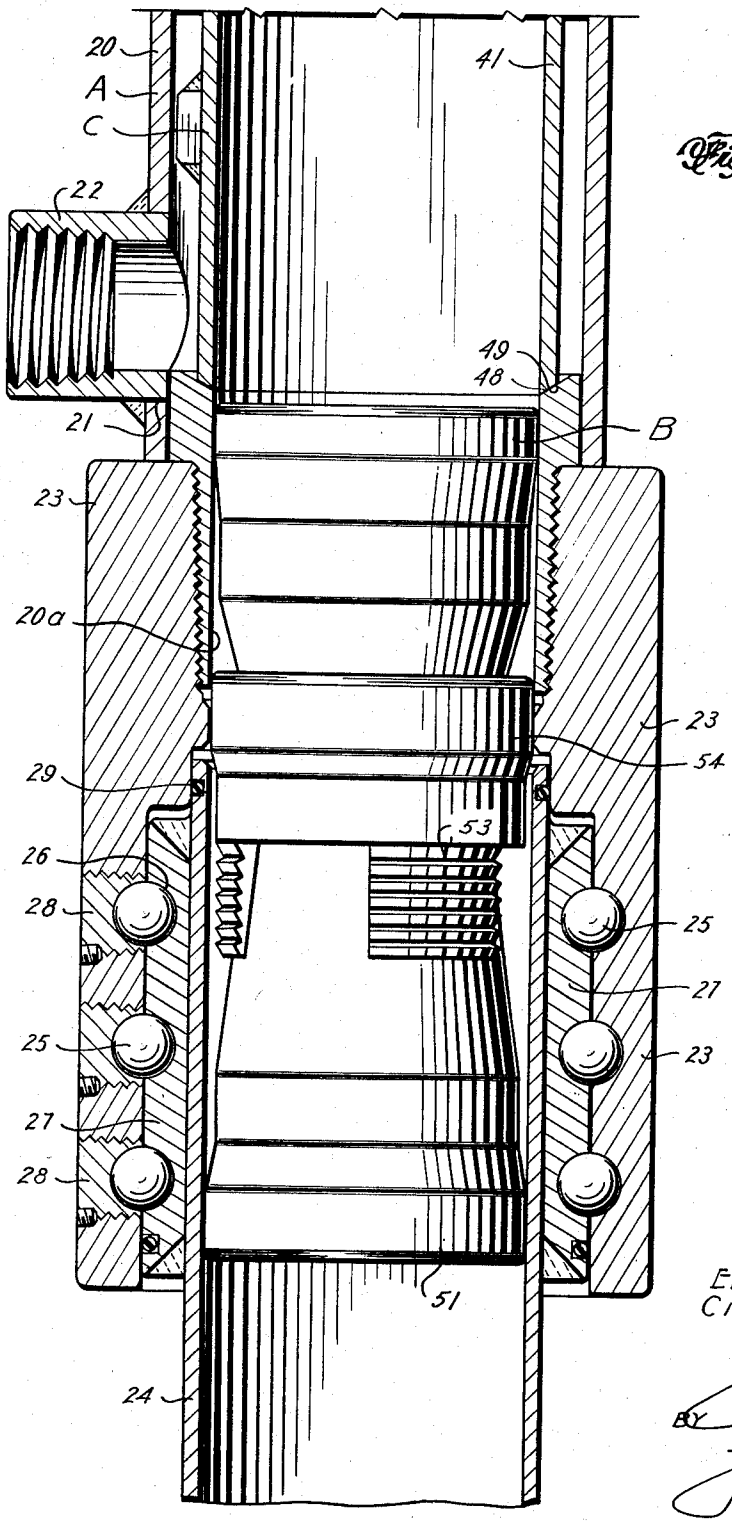

Fig. 6

Ernest L. Potts
Cicero C. Brown
INVENTOR
BY J. Vincent Martin
and
Joe E. Edwards
ATTORNEYS

APPARATUS FOR CEMENTING WELLS

Filed Feb. 9, 1949 5 Sheets-Sheet 5

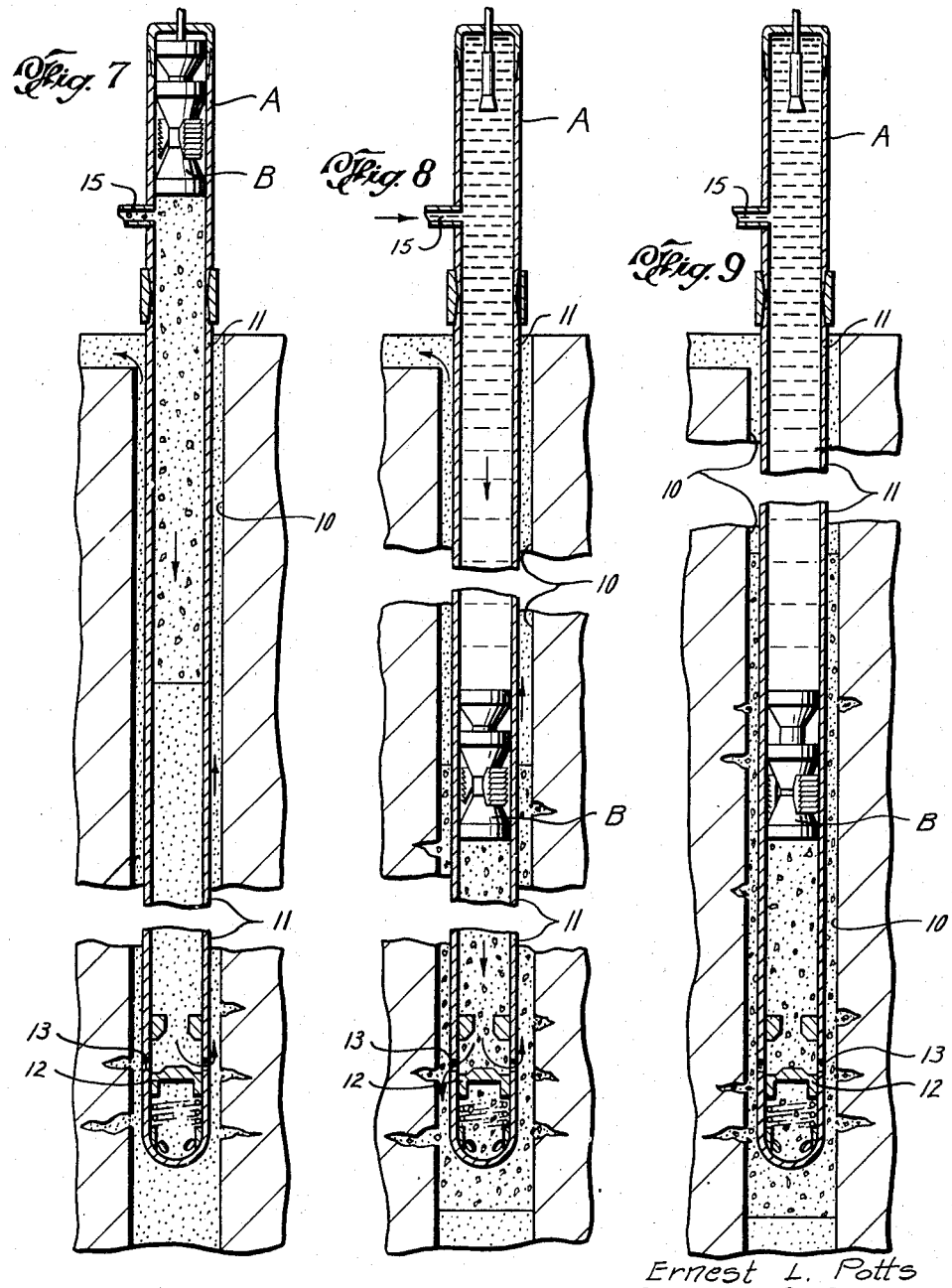

Ernest L. Potts
Cicero C. Brown
INVENTORS
BY Vincent Martin
and
Joe E. Edwards
ATTORNEYS

Patented Aug. 4, 1953

2,647,582

UNITED STATES PATENT OFFICE

2,647,582

APPARATUS FOR CEMENTING WELLS

Cicero C. Brown and Ernest L. Potts, Houston, Tex.; said Potts assignor to said Brown

Application February 9, 1949, Serial No. 75,451

11 Claims. (Cl. 166—1)

1

This invention relates to new and useful improvements in apparatus for cementing wells.

The invention relates particularly to an improved cementing plug and apparatus for disposing said plug in position behind the cement slurry whereby a continuous uninterrupted cementing operation may be performed.

As is well known, the usual cementing operation is carried out by introducing the cement slurry into the upper portion of the well pipe or casing and pumping the same downwardly therethrough with the cement being forced outwardly from the pipe or casing through the usual back-pressure valve at the lower portion of the pipe or in the case of a "squeeze cementing" operation, outwardly through perforations in the casing wall. The well pipe is filled with fluid or mud and the cement slurry is introduced as by pumping, and under the pump pressure forces the fluid outwardly from the pipe in advance of the cement. After the required amount of cement has been introduced, it is necessary that a separation or follow-up plug be inserted behind the cement to maintain a separation between the cement column and the motivating or driving fluid which is employed to pump the column downwardly to the point or elevation of its discharge from the well pipe.

The introduction of the separation plug element has presented a problem since obviously the well pipe or casing must be closed during the introduction of the cement under pressure and in order to insert the plug behind the cement at the desired time, it has been necessary to stop the pumps and open the system to permit entry of the plug. This involves a loss of time and an interruption of the cementing operation. Also, accurate determination of the exact time of insertion of the plug is difficult and as a result, it occurs that in the majority of instances the plug is misplaced with respect to the cement. For example, if a time lapse occurs between the introduction of all of the cement and the insertion of the plug, an air space or column forms between the cement and the plug, which air forms an air piston which subsequently interferes with proper placement of the cement. The volume or amount of cement which is introduced is determined on the assumption that the cement column will have been discharged from the casing when the separation or follow-up plug reaches the point of discharge and thus, any erroneous positioning of the plug results in an inefficient cementing operation.

It is, therefore, one object of this invention to provide an improved well cementing method

2

wherein the separation or follow-up plug may be properly inserted without stopping the pumps or opening the system, whereby a continuous cementing operation may be carried out.

An important object of the invention is to provide an improved cementing method comprising, pumping the cement slurry under pressure downwardly through the well pipe, and disposing a separation plug behind said cement without interrupting the pumping operation whereby the cement may be pumped into the well bore in a continuous operation.

Another object of the invention is to provide an improved apparatus for introducing a separation plug behind a cement column as the same is being introduced into a well pipe under pressure, which apparatus includes means for supporting the plug in position for introduction into the well pipe together with manually actuated means operable from exteriorly of the apparatus for introducing the plug into the pipe at the selected desired time, whereby proper positioning of the plug behind the cement column may be accomplished without halting the pumping operation.

A further object is to provide an apparatus of the character described, wherein the separation plug is latched in position in a chamber which communicates with the well pipe but is out of the direct line of flow, together with means for utilizing the line pressure for assuring release of the plug and introduction thereof into the well pipe.

A particular object of the invention is to provide a plug inserting apparatus having means for shutting off a direct flow from the inlet to the well pipe, to facilitate introduction of the separation plug.

Another object is to provide a plug inserting apparatus having a valve means for shutting off a direct flow from the source of pump pressure to the well pipe, and for directing the pressure into the pipe through a by-pass, together with means for utilizing the pressure within the well pipe for urging the valve means toward a position allowing direct flow from the pump pressure source to the pipe.

A still further object is to provide an apparatus, of the character described, wherein a single operating member functions to initially actuate a valve means to shut off a direct flow from the pump outlet to the well pipe or casing and then releases the separation plug from its latched position, with the flow from the pump outlet being utilized to urge the released plug into position within the casing.

Still another object is to provide an improved separation plug having means thereon which is normally retracted to permit said plug to be readily pumped downwardly through the well casing and which is adapted to move into a position locking the plug against upward movement in the casing in the event the pressure therebelow exceeds the pressure above the plug to thereby prevent upward displacement of said plug within the casing.

Other objects will appear hereinafter.

The construction designed to carry out the invention will be hereinafter described together with other features of the invention.

The invention will be more readily understood from a reading of the following specification and by reference to the accompanying drawings, wherein an example of the invention is shown, and wherein:

Figure 1 is a view, partly in section and partly in elevation of the upper portion of an improved apparatus, constructed in accordance with the invention, and illustrating the separation plug latched in position therein,

Figure 2 is a continuation of Figure 1, showing the lower portion of the device,

Figure 3 is a horizontal, cross-sectional view, taken on the line 3—3 of Figure 1,

Figure 4 is a horizontal, cross-sectional view, taken on the line 4—4 of Figure 1,

Figure 5 is a transverse, vertical sectional view of the upper portion of the apparatus with the latching mechanism released,

Figure 6 is a continuation of Figure 5, illustrating the separation plug within the well casing behind the cement column, and

Figure 7 is a schematic view of a well bore and casing, showing the cement slurry being introduced with the separation plug latched in position out of the line of flow,

Figure 8 is a similar view with the plug inserted behind the cement column, and

Figure 9 is a similar view illustrating the locking means on the plug in a position locking said plug against upward displacement in the casing.

In the drawings, the numeral **10** designates a well bore having a well pipe or casing **11** extending therethrough. The well casing is arranged to be lowered within the bore **10** in any suitable manner and has an upwardly closing back-pressure valve **12** co-acting with fluid outlet openings **13** in the lower portion of the casing. During running in or lowering of the casing, the pressure within the bore exteriorly of the casing and acting against the lower end of the valve maintains the same in a position closing the opening **13** to prevent entry of fluid into the casing. The valve is automatically moved downwardly to uncover and open the outlets **13** whenever the pressure within the interior of the casing string exceeds the pressure within the well bore **10**. As is well known, the well bore is ordinarily filled with fluid or mud and the casing is lowered through said fluid; during the lowering the interior or bore of the casing is filled with fluid in any suitable manner whereby when the casing is landed in final position, as shown in Figure 7, the casing is filled with fluid to a desired level.

After the casing string has been lowered into final position, it is desirable to carry out the usual cementing operation and ordinarily cement is pumped downwardly through the casing string and being under pressure functions to force the fluid within the casing string outwardly through or past the valve **12** which is opened by the pressure. Cement then passes outwardly into the well bore through the outlets **13** and rises to a predetermined height around the casing to permanently bond the lower portion of the casing within the well bore.

In order to assure the discharge of the entire cement column from the casing string and in order to employ a driving fluid for maintaining the pressure on such cement column, it is usual practice to dispose a separation plug behind the cement column to separate the cement from the driving fluid. The present invention is concerned with the disposition of this separation plug in proper position immediately behind or on top of the cement column, and is arranged so that said plug may be properly inserted within the well casing without the necessity of halting or interrupting the pumping operation by which the cement is being introduced and without opening the casing to atmosphere.

In carrying out the invention, the improved apparatus A, which is adapted to releasably retain a separation plug B, is mounted on the upper end of the casing string and has a radial inlet conductor **15** which communicates with the interior of the apparatus and the bore of the casing below the plug B, whereby the cement may be introduced through the conductor **15** and will flow downwardly into and through the well casing. In this manner, the plug B is normally disposed out of the line of flow of the cement. When sufficient cement has been introduced, the plug B is released so that it may fall downwardly on top of the cement column. This release of the plug into the well casing behind the cement is accomplished without opening the upper portion of the casing to atmosphere and without interrupting the pumping operation so that the pumps may continue to run to urge the driving fluid behind the plug and force the entire cement column downwardly.

The plug B travels downwardly through the well casing behind the cement as the operation continues and said plug functions to separate the cement from the driving fluid, as is clearly illustrated in Figure 8. When the cement has been discharged through the outlets **13** and the plug B is disposed in the lower portion of the well casing, said plug is constructed so that its upward movement or displacement within the casing is impossible. In other words, the plug B is provided with means actuated by an excessive pressure therebelow which will firmly lock said plug against upward displacement in the well casing. In this manner the plug will form a closure which will prevent the cement from being forced back upwardly through the well casing in the event that excessive pressure might develop within the well bore.

The apparatus A is clearly shown in Figures 1 and 2 and includes a cylindrical body **20** having a radial inlet opening **21** in its wall, and having a valve seat member **20*a*** secured within the lower portion of its bore below the inlet. A coupling collar **22** is welded or otherwise secured within the inlet opening **21** and this collar is adapted to receive the end of the inlet pipe or conductor **15** through which the cement and pressure fluid are introduced into the well casing. The lower end of the valve seat member **20*a*** is threaded into a mounting sleeve **23** which is rotatably secured to a pipe section **24** by means of ball bearings **25**. The pipe section **24** has its lower end arranged to be coupled to the upper end of the casing string. The balls

25 are retained within recesses 26 formed in an annular ring 27 which is welded or otherwise secured to the section 24 by means of threaded plugs 28 threaded into the sleeve 23 and said balls couple the parts together. By removing the plugs 28, the balls 25 may be removed to permit the body 20 to be disconnected from the pipe section 24. A suitable packing sleeve 29 packs off between the pipe section 24 and the mounting sleeve 23. The pipe section 24 has its lower end coupled to the upper end of the well casing and thus, the housing is rotatably mounted on said casing, whereby said casing may be rotated while the housing 20 remains stationary.

The upper end of the tubular body 20 is closed by a cap member or closure 30 which is formed with a depending annular flange 31 and the lower inner end of said flange is beveled to form an annular seat 32. The closure or cap member 30 is threaded into the upper end of the body and the joint therebetween is sealed by a suitable sealing ring 33. An axial opening 34 is formed in the cap or closure 30 and a packing gland sleeve 35 has its lower end threaded into this opening. An operating stem 36 extends through the bore 37 of the sleeve 35 and a packing element 38, mounted within the sleeve and tightened by the usual gland 39, packs off around the stem. The lower end of the stem being disposed within the housing 20 is exposed to the pressure in the well casing while the upper end of the stem is outside the housing and is exposed to atmosphere so that any pressure within the casing acting against the stem urges said stem to its upper position. Upward movement of the stem is limited by a stop nut 36a threaded onto the stem and adapted to engage the lower end of the sleeve 35.

The operating stem 36 is formed with an external annular shoulder 40 and said shoulder normally supports a sleeve valve assembly C, which is movable within the housing 20. The assembly includes a tubular sleeve valve element 41 having its upper end connected to an annular valve ring 42 while its lower end is open. The outer peripheral portion of the ring 42 is beveled as indicated at 43 and is adapted to engage the annular beveled seat 32 formed at the lower end of the flange 31 of the closure 30. The valve ring 42 has an axial opening 44 within which a collar 45 is threaded, said collar having the operating stem 36 extending therethrough. The shoulder 40 on the operating stem 36 engages beneath the collar 45 and thus, the valve sleeve assembly is suspended from said shoulder. The upper portion of the sleeve 41 is provided with radial openings 46, while the ring 42 has a plurality of vertical passages 47 therein, whereby pressures in and around the sleeve 41 may be equalized.

With the sleeve 41 in its uppermost position and its valve ring 42 engaging the seat 32, the lower end of the sleeve is opposite the upper portion of the inlet conductor 15 and is spaced from an annular valve seat 48 at the upper end of the seat member 20a below the inlet conductor 15. The extreme lower end of the sleeve 41 is beveled as indicated at 49 and is adapted to be moved downwardly to engage the annular valve seat 48 to shut off a direct flow from the inlet conductor into the well casing. Thus, it will be seen that when the sleeve assembly C is lifted or in its raised position, its lower end is disengaged from the internal seat 48 to allow direct flow from the inlet conductor 15 into the well casing; when the sleeve assembly is lowered with the beveled lower edge 49 engaging the seat 48, a direct flow from the conductor 15 into the well casing is shut off. Because the assembly C is suspended from the shoulder 40 of the operating stem 36, the pressure present in the well casing and acting upwardly against said stem urges the stem and assembly toward an upper position. For guiding the lower portion of the sleeve assembly in its movement within the body 20 the sleeve 41 may be formed with radial guide lugs 41a.

The separation plug B includes a tubular mandrel 50 having a closed lower end 50a having a downwardly flared packing element 51 which seals against upward flow past the mandrel mounted on its lower end. Intermediate its ends, the mandrel is formed with a conical or tapered surface 52 upon which a plurality of segmental slip members 53 are slidably mounted and the slip members have their upper ends attached to an annular packing sleeve 54 which is flared in an upward direction, whereby pressure from above may be sealed by said sleeve. An upper annular packing element 55 which is flared outwardly in an upward direction is secured to a tubular support 56 having threaded connection with the upper end of the mandrel. The upward flaring of the packing element 55 permits said element to seal against downward flow past the mandrel. The support 56 overhangs a metallic ring 57 which is molded within the intermediate or slip packing sleeve 54 and functions to limit upward sliding movement of the packing sleeve and the slips 53 attached thereto with respect to the mandrel.

At the intersection of the supporting element 56 and the upper end of the mandrel, an annular locking recess or groove 58 is formed and this recess is adapted to be engaged by locking lugs 59 which are provided on the lower end of flexible arms 60, the upper ends of said arms being made integral with or attached to the supporting ring 45 of the valve sleeve assembly C. The arms 60 form flexible or resilient latching elements which releasably fasten the separation plug B within the sleeve 41 of the assembly C and which are maintained within the annular locking groove 58 by means of a conical or tapered head 61 formed on the lower end of the operating stem 36.

With the separation plug in position within the sleeve valve assembly C and with said assembly in its raised position, the parts are in the position shown in Figures 1 and 2 and in such position, the lower end 49 of the sleeve 41 is disengaged from or spaced above the seat 48, whereby a direct flow from the conductor 15 and into the upper end of the casing may occur. At this time the assembly C is suspended from the supporting shoulder 40 on the operating stem 36 and the latching elements 60 are engaged within the locking recess 61 of the separation plug B, said latching elements being held in their latched position by the conical head 61 of the operating stem. The pressure which may be present within the line 15 and the well casing may pass upwardly around the sleeve 41 of the assembly C and through the ports 46 and passages 47, whereby pressures in and around the assembly C are equalized. At this time, the cement may be pumped through the line 15 and into the well casing in the manner illustrated in Figure 7. The pressure which is present in the casing and which is equalized around the assembly C is act-

ing against the lower end of the operating stem 36 through the tubular mandrel 50 and functions to hold the assembly C in a raised position. During the cementing operation, it may be desirable to rotate the casing and the rotatable connection by means of the balls 25 permits such rotation of said casing while the housing 20 remains stationary.

When it is desired to introduce the plug B so that said plug will separate the cement column from the driving fluid which driving fluid is ordinarily the usual drilling mud, it is only necessary to move the operating stem 36 downwardly against the pressure acting against the stem and this will permit the assembly C to move downwardly therewith to seat the lower end 49 of the sleeve 41 on the seat 48. It is noted that since pressures across the assembly C are substantially equalized, the only force required to allow downward movement of the assembly is the force necessary to overcome the pressure acting against the relatively small cross-sectional area of the operating stem 36. When the lower end 49 of the sleeve 41 engages the slot 48, a direct flow from the inlet 15 to the wall casing is shut off but the pressure present in the inlet may still pass upwardly around the sleeve 41 and through ports 46 to the area above the plug B. Continued lowering of the operating stem 36 will result in the stem moving downwardly with respect to the assembly C which is now held stationary due to the engagement of the lower end 49 of the sleeve 41 with the valve seat 48; such continued lowering of the stem will move the conical or tapered head 61 at the lower end of said stem downwardly with respect to the resilient latching elements so that the smaller portion of the head moves into a plane in alignment with the lugs 59. When this occurs the latching elements 60 may retract or move inwardly to disengage the locking lugs 59 thereof from the locking recess 61 and the pressure from the line 15 which is present above the assembly C and above the separation plug B will immediately drive the plug downwardly from the lower end of the sleeve 41 and into the well casing on top of the cement column.

The plug is inserted immediately behind the cement and will follow the cement column closely with the driving fluid theoretically being behind the plug; the driving fluid is preferably the usual mud but may be any other type of pressure fluid. However, because the cement column tends to fall away from the driving fluid, a temporary suction or vacuum is created below the operating stem immediately following introduction of the plug B and before the pumps can build up sufficient pressure to catch up with the falling column. During this temporary suction period, the sleeve 41 remains seated but as soon as the pressure below the stem exceeds the atmospheric pressure to which the upper end of the stem is exposed, the stem is returned to an upper position which lifts the assembly C to again unseat the lower end thereof from the valve seat 48. The sleeve 41 is thus returned to its uppermost position so that a direct flow from the line 15 into the casing may again occur to continue pumping the driving fluid directly into the casing behind the plug to force the cement into position within the well bore. It is apparent that there is no interruption of the pumping operation in order to insert the plug and the plug is forced into the well casing by the line pressure to assure substantially instantaneous introduction of the plug upon release of the latching elements 60. Closing of direct flow from the inlet to the casing is effected during the introduction of the plug with such direct flow being automatically reopened after the plug is released.

As the pumping continues, the separation plug B will follow the cement column, as illustrated in Figure 8, and the upper and lower packing elements 51 and 55 of said plug will engage the wall of the well casing with the upper element 55 functioning to form a seal during such lowering. Also the packing sleeve 54 which is associated with the gripping slips 53 of the separation plug engages the wall of the well casing and this frictional engagement forms a drag which is sufficient to maintain the gripping slips at the upper end of the conical slip expanding surface 52 on the mandrel of said plug to maintain said slips 53 retracted during lowering. After the cement has been ejected or discharged from the well casing the plug B will, of course, be in the lower end of the casing and a release of the pressure from above or an excessive building up of pressure below the plug will result in tending to cause upward movement of the plug through the casing. It is at this time that the slips 53 function to lock the plug B against such upward displacement. If upward movement of the plug tends to occur the higher pressure acting beneath the lower packing element 51 will move the mandrel 50 upwardly while the slips will be retained more or less stationary by the frictional engagement of their packing sleeve 54 with the wall of the casing, whereby the slip expanding surface 52 coacts with the slips 53 to expand them into gripping position. Thus, the plug will be definitely locked against any upward displacement and will function to absolutely prevent the cement from being forced back upwardly through the well casing.

Any suitable means may be employed for lowering the operating stem 36 to allow downward movement of the sleeve valve assembly C and for releasing the separation plug B and a preferred arrangement is illustrated in the drawings. As shown in Figure 1, the operating stem 36 extends upwardly through the packing gland 39 and has a nut 62 threaded thereon, with said nut being spaced from the upper end of the gland 39 when the stem is in its raised position. To prevent premature lowering of the stem in the event the casing pressure normally acting to hold the stem 36 should be dissipated for any reason, a U-shaped locking spacer or clevis 63 is adapted to engage over the stem 36, being located between the gland 39 and nut 62. The spacer may have a spring clip 64 (Figure 4) secured therein so that a frictional engagement with the stem may be had. An eye 65 is welded or otherwise secured to the exterior of the spacer 63 to facilitate insertion and removal of the spacer between the gland 39 and the nut 62.

Above the nut 62 the stem 36 has a sleeve 66 mounted thereon and this sleeve is connected through a pin 67 to an operating lever 68 at a point intermediate the ends of the lever. One end of the lever is pivoted by means of a pin 69 to the upper end of a link 70 with the lower end of the link being pivoted on a pin 71 between pivot ears 72 which are formed integral with and which extend upwardly from the closure 30. The linkage arrangement allows a swinging movement of the lever to impart a straight line movement to the stem 36. Obviously, when the spacer or clevis 63 is in position between the gland 39 and the nut 62, the lever 68 cannot be actuated to

lower the operating stem 36; however, when the spacer 63 is removed from between the nut 62 and the gland 39, a downward movement of the outer end of the lever 68 will result in a downward movement of the stem 36.

In order to facilitate the removal of the spacer 63 and a subsequent downward swinging of the outer end of the lever 68 a cable 73 may have one end secured to the outer end of the lever 68 after which the cable is threaded through the eye 65 of said spacer. With this arrangement, a pull on the cable 73 in the direction of the arrow in Figure 1 will result in a removal of the spacer 63, with continued pull on the cable accomplishing a swinging of the lever 68 and a resultant downward movement of the operating stem. As explained, downward movement of the stem will first allow lowering the valve sleeve assembly B to shut off the direct communication between the inlet line 15 and the well casing after which the latching elements 60 will release the separation plug to allow the latter to be forced by the inlet pressure into the well casing behind the cement column.

From the foregoing, it will be seen that a continuous method of well cementing may be carried out. The cement is pumped downwardly through the casing as illustrated in Figure 7 with the separation plug mounted in position within the valve sleeve assembly C. At this time pressures across the plug B as well as across the assembly C are substantially equalized, with the casing pressure acting against the lower end of the operating stem 36 to maintain the assembly in its raised position. When it is desired to introduce the separation plug it is only necessary to actuate the cable 73 whereby the spacer 63 is removed and the operating lever 68 is swung to lower the operating stem 36. The initial lowering movement of the stem 36 results in seating the lower end 49 of the sleeve 41 on the internal sleeve 48 to shut off a direct flow from the conductor 15 to the well casing. Continued lowering of the operating stem effects a release of the latching elements 60 to disengage their locking lugs 59 from the locking recess 58 of the plug. Because the line pressure at this time is above the plug such pressure will immediately move the plug downwardly from the sleeve 41 and into the well casing and the plug is thereby released and introduced without the necessity of stopping the pumps or without opening the system to atmosphere. The pressure in the line 15 actually assures that the plug B will be inserted into the well casing and after the introduction of the plug, the operating stem 36 is subsequently lifted to return the sleeve valve assembly C to its upper position, by the pressure within the well casing.

The plug B functions to separate the cement from the driving fluid which is pumped into the casing behind the plug and said plug moves downwardly within the well casing behind said cement. After the cement has been discharged any excessive pressure beneath the plug will immediately set the slips 53 of said plug so that upward displacement of the plug is prevented and the pressure on the cement is maintained during setting of said cement. Following setting of the cement, the plug is drilled out in the usual manner. The particular construction of the plug B is subject to some variation since various types of packing elements may be substituted for the particular pressure seal flared sleeves which have been illustrated. The plug is normally maintained out of the line of flow of the cement so as not to interfere with the introduction thereof and is supported in a position permitting its substantially instantaneous introduction when the apparatus is actuated.

The foregoing description of the invention is explanatory thereof and various changes in the size, shape and materials, as well as in the details of the illustrated construction may be made, within the scope of the appended claims, without departing from the spirit of the invention.

Having described the invention, we claim:

1. An apparatus for inserting a separation plug behind cement in a well pipe including, a well pipe having an inlet in its upper portion, whereby cement and other fluid may be pumped under pressure into said pipe, a housing defining a chamber above the inlet and communicating with the pipe, a separation plug element disposed within the chamber and out of the direct line of the flow of cement being introduced, a tubular valve element in said housing disposed above said inlet, and annular valve seat in said well pipe below said inlet, means for releasing said valve element for seating on said valve seat to shut off the direct flow from the inlet to the well pipe, and means for selectively introducing said plug element into the pipe behind the cement and in advance of a following pressure fluid without halting the pumping operation.

2. An apparatus for inserting a separation plug behind cement in a well pipe including, a well pipe having an inlet in its upper portion, whereby cement and other fluid may be pumped into said casing, a tubular body connected to the upper portion of said casing and in communication with the casing above said inlet, movable valve means mounted in the body and arranged to be actuated to shut off a direct flow from the inlet to the well pipe, a separation plug separate from and releasably connected to said body, and means operable from exteriorly of the body for actuating the valve and for subsequently releasing the plug from said valve means whereby said plug is introduced into the well pipe while the direct flow from the inlet to the pipe is shut off.

3. An apparatus as set forth in claim 2, together with means exposed to the pressure within the well pipe for coacting with the valve means to return the valve means to its original position allowing a direct flow from the inlet to the pipe after the plug is inserted in the pipe.

4. An apparatus as set forth in claim 2 wherein said valve means includes openings for directing the pressure from the inlet against the separation plug when direct communication between the inlet and pipe is shut off to assure release of said plug and insertion thereof into the well pipe.

5. An apparatus for inserting a separation plug behind cement in a well pipe including, a well pipe having an inlet line in its upper portion whereby cement and other fluid may be pumped into said pipe, a separation plug normally disposed completely out of the direct line of flow from the inlet to the pipe, valve means for shutting off the direct flow from the inlet to the pipe and for directing pressure against the plug in a direction to urge the plug into the pipe, and a connecting means detachably connecting said plug to said valve means whereby upon a release of said plug from said valve means said plug is introduced into the well pipe behind the cement.

6. An apparatus as set forth in claim 5, wherein the connecting means for detachably connecting the plug to the valve means is operable from exteriorly of the well casing and also wherein

the valve means is constantly urged by the pressure within said pipe toward a position allowing direct flow from the inlet to the pipe.

7. An apparatus as set forth in claim 5, together with means operated by the pressure within the pipe for returning the valve means to its initial position re-establishing direct flow from the inlet to the well pipe after the plug has been introduced into the pipe.

8. An apparatus as set forth in claim 5, wherein said connecting means includes a common control member for controlling closing of the valve means and the release of said plug from said valve means, said control member being operable from exteriorly of the well pipe.

9. An apparatus for inserting a separation plug within a well casing including, a well casing having an inlet in its upper portion, a housing mounted on the upper end of the casing, an annular valve seat within the casing below the inlet, a sleeve valve assembly mounted within the housing and movable into engagement with the seat, to shut off a direct flow from the inlet into the well casing, means for normally maintaining the valve assembly in a position within the body and disengaged from the seat, whereby cement may be pumped through the inlet into the casing, means for moving the valve to a seated position to shut off the direct flow from the inlet to the casing after the cement has been introduced, a separation plug releasably latched within the valve assembly, and means for releasing said plug to allow

it to enter the casing when the valve assembly is seated.

10. An apparatus as set forth in claim 9, together with a common actuator accessible from exteriorly of the housing and connected with the sleeve valve and the plug releasing means, whereby operation of said valve and said plug releasing means may be controlled from exteriorly of said housing.

11. An apparatus as set forth in claim 9, together with means operated by the pressure within the casing for returning the sleeve valve to its normal unseated position after the plug has entered the casing, whereby direct flow from the inlet to the casing is reestablished subsequent to the introduction of the plug into the casing.

CICERO C. BROWN.
ERNEST L. POTTS.

References Cited in the file of this patent

UNITED STATES PATENTS

Number	Name	Date
1,503,693	McLean	Aug. 5, 1924
1,662,311	Hamer	Mar. 13, 1928
1,772,871	MacClatchie	Aug. 12, 1930
1,791,874	Rodgers	Feb. 10, 1931
1,875,266	Santiago	Aug. 30, 1932
1,882,099	Trouth	Oct. 11, 1932
2,104,270	Owsley	Jan. 4, 1938
2,223,388	Scaramucci	Dec. 3, 1940
2,228,630	Kail	Jan. 14, 1941
2,277,510	Courter	Mar. 24, 1942