May 26, 1953 J. WEIMONT 2,639,830

MACHINE FOR ATTACHING AND WIPING LABELS ON CONDUITS OR OTHER CYLINDRICAL ARTICLES

Filed Jan. 7, 1950 5 Sheets-Sheet 1

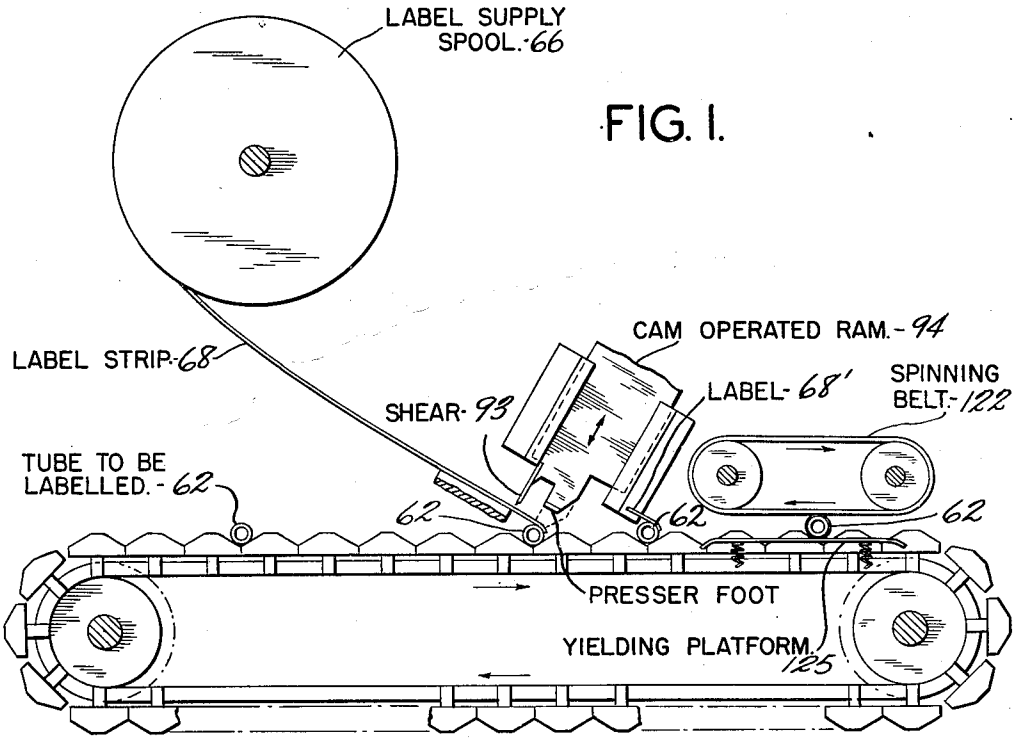

INVENTOR.
Joseph Weimont
BY Emery, Vanney, Whittemore & Dix
ATTORNEYS.

May 26, 1953 J. WEIMONT 2,639,830

MACHINE FOR ATTACHING AND WIPING LABELS ON CONDUITS OR OTHER CYLINDRICAL ARTICLES

Filed Jan. 7, 1950 5 Sheets-Sheet 2

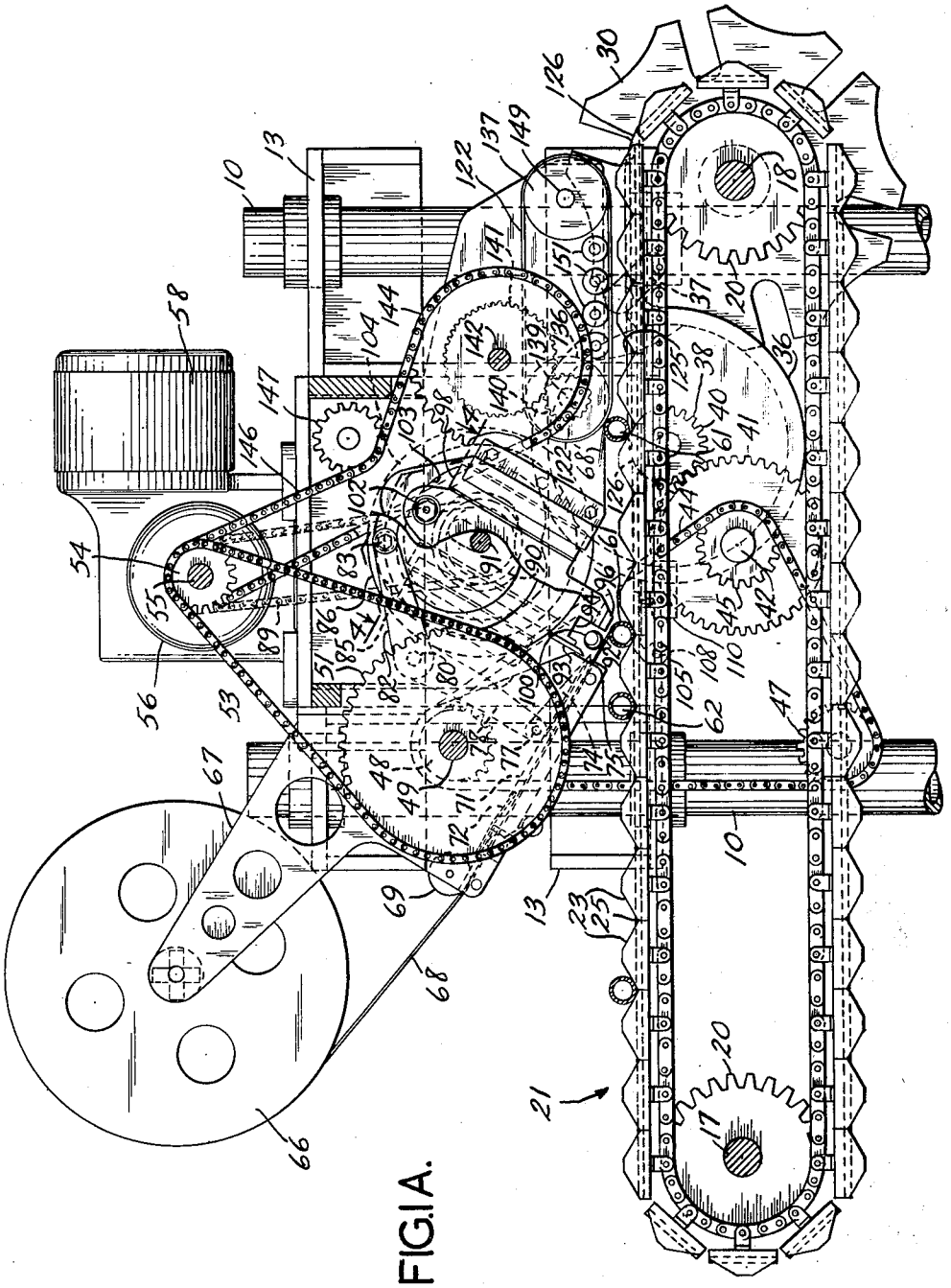

FIG. 1A.

INVENTOR
Joseph Weimont
BY Emery Vanney,
Whittemore & Dix
ATTORNEY

May 26, 1953 J. WEIMONT 2,639,830

MACHINE FOR ATTACHING AND WIPING LABELS ON CONDUITS OR OTHER CYLINDRICAL ARTICLES

Filed Jan. 7, 1950 5 Sheets-Sheet 3

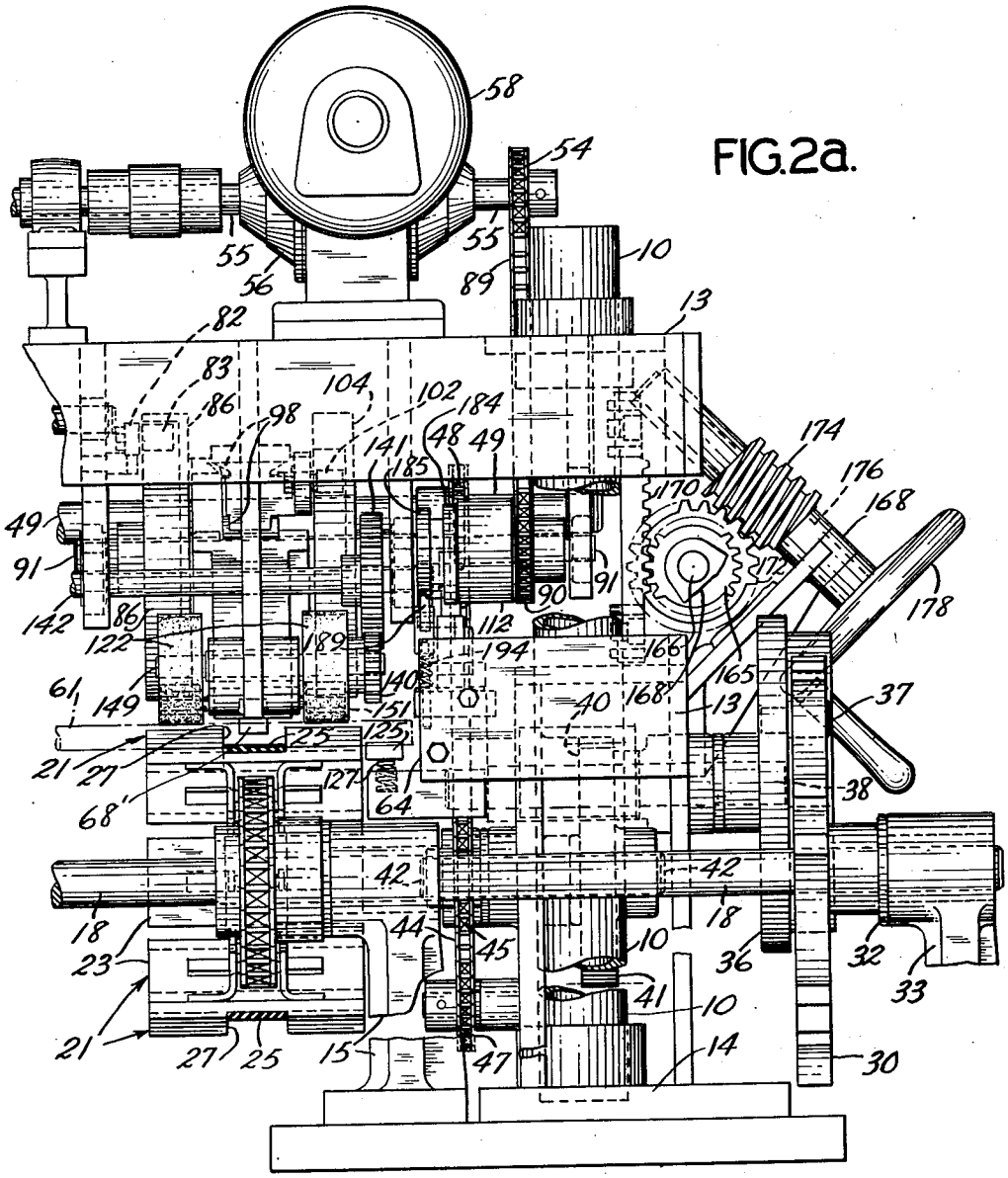

FIG. 2a.

INVENTOR
Joseph Weimont
BY Emery Varney
Whittemore & Dix
ATTORNEY

May 26, 1953 J. WEIMONT 2,639,830

MACHINE FOR ATTACHING AND WIPING LABELS ON CONDUITS OR OTHER CYLINDRICAL ARTICLES

Filed Jan. 7, 1950 5 Sheets-Sheet 4

FIG.2b.

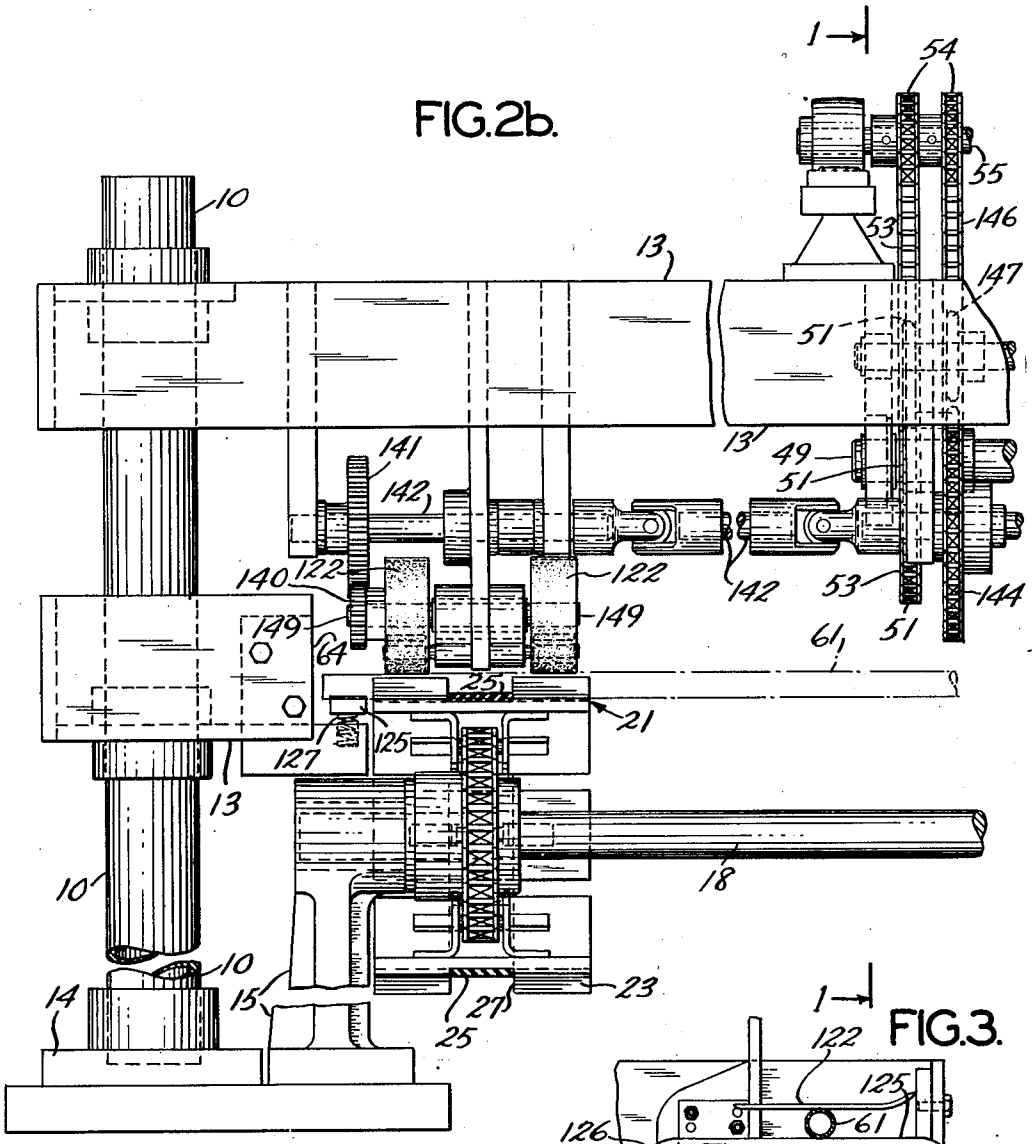

FIG.3.

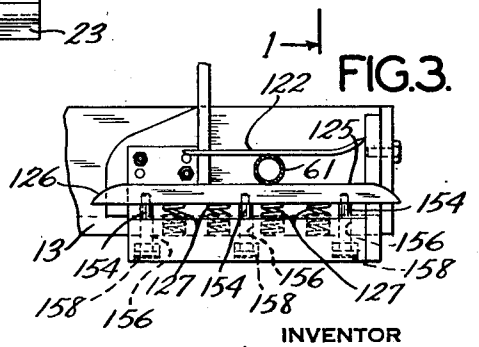

INVENTOR
Joseph Weimont
BY Emery Varney
Whittemore & Dix.
ATTORNEY

FIG.4.

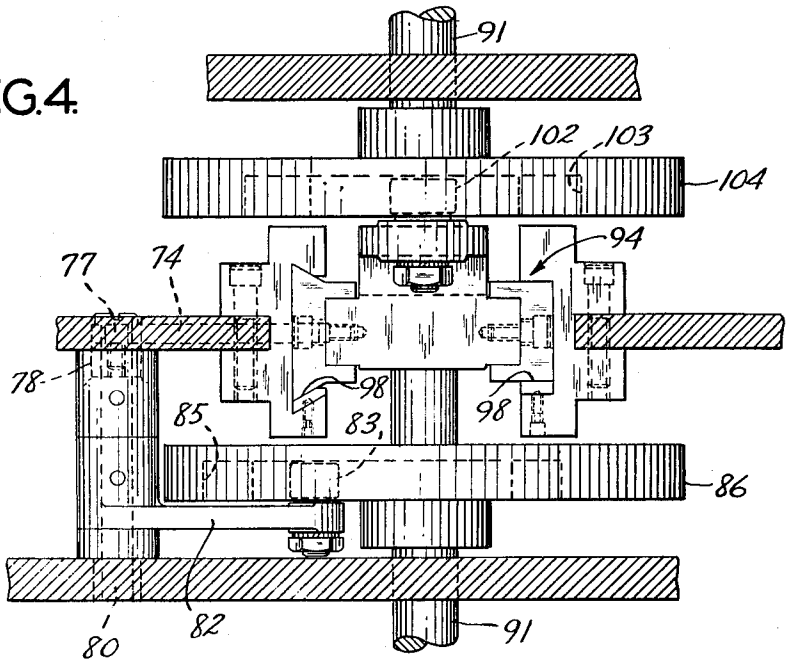

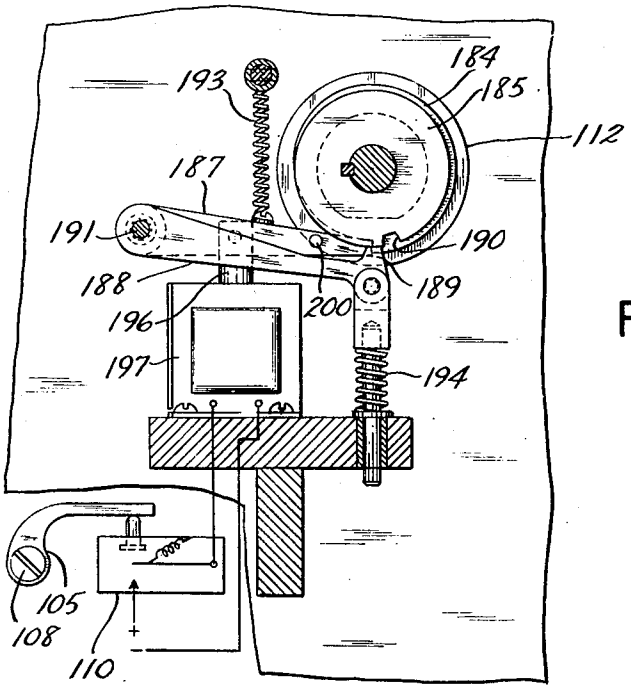

FIG.5.

INVENTOR
Joseph Weimont
BY Emery, Varney, Whittemore & Dix
ATTORNEY

Patented May 26, 1953 2,639,830

UNITED STATES PATENT OFFICE

2,639,830

MACHINE FOR ATTACHING AND WIPING LABELS ON CONDUITS OR OTHER CYLINDRICAL ARTICLES

Joseph Weimont, Bogota, N. J., assignor to A. Kimball Company, New York, N. Y., a corporation of New York

Application January 7, 1950, Serial No. 137,306

15 Claims. (Cl. 216—23)

1

This invention relates to apparatus for applying labels to cylindrical articles, including pipes and electrical conduit. The invention applies more particularly to apparatus for severing labels from a strip and applying the separate labels by adhesive to the outside surface of the article.

One object of the invention is to provide improved apparatus that makes the cutting, applying and smoothing of adhesive labels on cylindrical articles entirely automatic, the articles being supplied to conveyors which carry them through the labeling machine and then discharge the labeled articles from the other end of the machine.

One feature of the invention relates to the apparatus for cutting the labels from a strip and applying the successive labels to the respective articles that are advanced to the attaching station by the conveyor. If the apparatus is to be used with thermoplastic or water-moistened adhesive, the label cutting and feeding feature is combined with apparatus for making the labels sticky as they pass beyond the cutting apparatus. Other adhesives, such as pressure-sensitive adhesives, can be used if desired.

Another object of the invention is to provide a label-attaching machine for elongated cylindrical articles with apparatus for rolling the articles, after one edge of a label is attached, in order to apply the label smoothly over its entire area. This object is obtained by means of apparatus that lifts the article part way out of the article holder of the conveyor, and that rolls the article in contact with a label smoothing surface while the article is in this elevated position.

Other objects of the invention relate to improved mechanism for coordinating the intermittent movement of a conveyor with cutting and attaching apparatus at a label attaching station, and with article rolling mechanism for wiping the label into contact with the article over the full width of the label.

The invention comprises a combination of mechanisms including gears, cams, sprocket chains and an intermittent motion device combined in such a way as to produce fully automatic cutting and applying of labels to cylindrical articles with operating parts that are simple and reliable in operation.

Other objects, features and advantages of the invention will appear or be pointed out as the description proceeds.

In the drawing, forming a part hereof, in which like reference characters indicate corresponding parts in all the views,

2

Figure 1 is a diagrammatic view showing the principal elements of the machine which is shown in detail in subsequent figures of the drawing.

Fig. 1A is a side view, partly diagrammatic and partly in section, showing a labeling machine embodying this invention.

Figs. 2*a* and 2*b* are an end view, partly broken away, of the machine shown in Fig. 1A.

Fig. 3 is a detail view of the spring-supported platform that lifts the articles part way out of the article holders prior to rolling.

Figure 4 is an enlarged plan view of a portion of the machine shown in Figure 2.

Figure 5 is a diagrammatic view showing the control mechanism for preventing operation when there is no article in position to receive a label.

The machine illustrated includes a frame assembly having vertical columns **10** and an adjustable upper frame **13** supported on the columns **10** and adjustable axially of the columns to accommodate conduits of different size. The columns **10** extend upward from bearing plates **14** (Fig. 2), and these bearing plates also support fixed lower frame elements comprising pedestal bearings **15**. These pedestal bearings **15** support shafts **17** and **18** (Fig. 1A) on which there are conveyor sprockets **20**.

An endless belt conveyor **21** extends between the sprockets **20** and has transversely extending cleats **23** with sloping faces that form shallow V depressions between the successive cleats. The surfaces of these shallow depressions comprise the article holders of the conveyor, and there is a rubber insert **25** extending for the full length of each cleat, but across only an intermediate central portion of the width of each cleat in a recess **27**, as shown in Fig. 2.

The shaft **18** extends beyond the pedestal bearing **15** at the right-hand side of the machine and is connected with a Geneva wheel **30** through which power is applied to the shaft **18** to produce intermittent angular movement of the shaft. A thrust washer **32** bears against the hub of the Geneva wheel **30** and against an end face of another pedestal bearing **33** which is a part of the fixed frame of the machine.

A Geneva driver and locking wheel **36** is located adjacent the Geneva wheel **30** and has a drive pin **37** extending from one side for engagement in the notches of the Geneva wheel. This driver and locking wheel **36** is pinned to a drive shaft **38** that turns in bearings connected with the fixed frame of the machine. There is a gear **40** (Fig. 1A) secured to the shaft **38**, and this gear

40 meshes with a larger gear 41 on a shaft 42. Power is supplied to the shaft 42 by a sprocket chain 44 running on a sprocket 45 that is connected to the shaft 42.

The sprocket chain 44 extends around a take-up sprocket 47 and a driving sprocket 48 on a shaft 49. A larger sprocket 51 is also connected to the shaft 49 and this larger sprocket 51 is driven by a sprocket chain 53 from a smaller sprocket 54 on an output shaft 55 of a speed reducer 56 which is driven by a variable speed, power driving mechanism 58 mounted on top of the adjustable upper frame of the machine.

Continuous rotation of the driving mechanism 58 imparts continuous rotation to the Geneva driver and locking wheel 36, through the motion transmitting connections already described, and the pin 37 of the Geneva driver engages the notches of the Geneva wheel 30 which have their angular spacing coordinated with the conveyor 21 so that each intermittent movement of the Geneva wheel 30 causes the conveyor 21 to move for a distance equal to the length of one cleat. Thus when a conduit 61 is located at the label attaching station during one period of dwell of the Geneva wheel 30, the next movement of the wheel and conveyor move the conduit 61 beyond the attaching station and bring the next successive conduit 62 into exactly the same position at the attaching station that was occupied by the conduit 61 during the preceding period of dwell.

There are two similar conveyors 21 (Fig. 2) at opposite sides of the machine, and the frame of the machine is so constructed that a conduit 61 extending across the space between the conveyors can move along the full length of the conveyors without encountering any obstructions. Guide plates 64 on both sides of the machine beyond the conveyors 21 provide limit stops for preventing axial movement of the conduits 61, 62 on the conveyors. No apparatus for feeding conduits to the conveyors or for collecting them after they are discharged from the ends of the conveyors are shown in the drawing since such handling equipment is not a necessary part of the labeling machine and such a showing is unnecessary for a complete understanding of this invention.

The region of the machine adjacent to the conduit 61 in Fig. 14 is the attaching station of the machine. Labels are supplied to the attaching station from a reel 66 supported on a bracket 67 from the upper frame of the machine. The labels are wrapped on the reel 66 as a continuous strip 68, and this strip 68 is fed downward across a guide roll 69 and through a paper guide 71 which includes a tension bar 72 bearing against the top surface of the strip 68 to maintain the strip under some tension during the feeding operation. There are spaced feed slots in the label strip 68, preferably one feed slot for each label; and the strip of labels is fed forward, one label at a time, by a feed pawl 74 having a stud 75 at its lower end in position to engage in the feed slot of each successive label.

The feed pawl 74 is supported by a pivot 77 at the lower end of a crank arm 78. This crank arm is connected to a shaft 80 from which a lever 82 extends. A cam roller 83 at the free end of the level 82, runs in a groove 85 of a face cam 86.

A continuous and uniform rotation is transmitted to the cam 86 from the driving mechanism 58 through a sprocket 54 and sprocket chain 89 which drive a chain sprocket 90 connected to a shaft 91, the same shaft to which the cam 86 is connected. The mechanical advantage of the motion transmitting mechanism that rotates the cam 86 is so correlated with the driving mechanism for the Geneva driver 36 that the cam 86 makes one revolution as the Geneva driver 36 makes one. The cam track 85 is shaped to impart motion to the feed pawl 74 so as to feed the label strip 68 for a distance equal to the length of one label and in timed relation to the other mechanism of the machine.

The end of the paper guide 71 is spaced from the article 61 by a distance slightly less than the length of a label so that the endmost label 92 is tangent to and extends for a moderate distance over the conduit 61 when the upper end of the label is even with the end of the paper guide 71.

There is a knife blade or cutter 93 connected to a ram 94 which reciprocates through a moderate length of stroke toward and from the conduit 61. The ram 94 has a presser foot 96 in position to come into contact with the label 92 and to push one edge of the label firmly against the outside surface of the conduit 61. The lower end of the presser foot 96 is preferably resilient so as to allow for manufacturing tolerances and for some tolerance in the adjustment of the machine itself.

The ram 94 slides in dovetailed guideways 98 connected to the adjustable upper frame of the machine. Movement of the ram 94 along the guideways 98 to bring the presser foot 96 into position where it forces the label 92 against the conduit causes the cutter 93 to move across the label strip 68 and sever the endmost label 92 from the strip.

The cutter 93 is slightly shorter than the presser foot 96 so that the presser foot forces the label into firm contact with the outside surface of the conduit before the cutter severs the label from the strip. The label is thus secured to and supported by the conduit 61 before the other end of the label is cut off and left unsupported.

The labels of the strip 68 are preferably coated with adhesive on one side, but this adhesive is of a nature that requires heat to make it sticky. The strip 68 comes through the paper guide 71 with the adhesive-coated side lowermost but not sticky; and there is a heater 100 located at the attaching station under a recess of the ram 94. This heater 100 is supported from the upper frame of the machine and in position to apply heat to the upper surface of the label as the label is fed from the paper guide to labelling position above the conduit 61. This heat is sufficient to make the adhesive of the label sticky as the label moves past the heater, and the adhesive remains sticky for a substantial period of time while the conduit 61 is moved beyond the label attaching station. The heater 100 is merely representative of apparatus for activating the adhesive. If moistening is required, an application is placed under the label. If pressure-sensitive adhesives are used, no activators other than the ram are necessary.

The ram 94 has a cam follower 102 which runs in a cam track 103 formed in a cam 104 which is similar to the cam 86 and secured to the same shaft 91 so that the two cams 86 and 104 turn as a unit and always remain in the same phase angle relation with one another. The cam track 103 is shaped to give the knife 93 and pressure foot 96 the intended sequence of movement during each cycle of operation of the machine. The cam track 103 is correlated with the cam track 85 so that the knife 93 severs the label from the

strip during a period when the feed pawl 74 is retracted and is out of the path of movement of the knife.

There is a trip lever 105 located along one side of the conveyor at the attaching station. This trip lever is movable about a pivot fulcrum 108 and the free end of the trip lever rests upon a microswitch 110. When there is a conduit 61, 62 at the attaching station, the weight of the conduit presses the trip lever 105 downward with sufficient force to operate the microswitch 110 in the control circuit of the mechanism that drives the cams 86 and 104.

The shaft 91 is made up of two sections in axial alignment with one another. A clutch 112 connects the two sections of the shaft 91. The driving element of the clutch is connected with the right-hand section of the shaft (Fig. 2) and the driven section of the shaft, on which the cams 86 and 104 are carried, is connected with the driven side of the clutch 112.

In the preferred construction, the clutch 112 is a one-turn clutch; that is, it disengages automatically after each revolution. Such clutches, and control mechanism for them, are well known mechanical expedients and a detailed description of the clutch construction is not necessary for a complete understanding of this invention. The control of the clutch 112 by the conduits on the conveyor will be described in connection with Fig. 5.

After the conduits have passed beyond the attaching station with the label 92 attached to the conduit 61 along only one edge portion of the label, there are belts 122 for rolling the conduit 61 when it reaches the dotted line position shown in Fig. 1A. These rolling belts 122 are located near the opposite ends of the conduit so as to apply their rolling forces to the conduit without danger of shifting the conduit into oblique positions on the conveyors such as might occur if the rolling force were applied at only one end of the conduit. In the construction illustrated, there are four rolling belts 122, best shown in Fig. 2; and the rolling belts at the right hand end of the machine contact with the conduit on both sides of the surface zone to which the label 92 is connected.

Just before the conduit 61 comes into contact with the rolling belts 122, the conduit is lifted up part way out of the conduit holders of the conveyors, that is, part way out of the V depression between the successive cleats of the conveyor. The lifting of the conduit is done by platforms 125, each having a cam face 126 that starts at a level below the bottom of the conduit and that slopes upward as illustrated in Fig. 3. The purpose of this platform is to support the conduits on a surface on which they can roll more easily, and also to hold the conduits against the rolling belt with a yielding force that is supplied by springs 127 located under the platform 125. The springs 127 and the mounting of each platform 125 will be described in connection with the explanation of Fig. 3. For the present it is sufficient to understand that the platform 125 rests on springs that yield to provide space for the conduit 61 between the platform 125 and rolling belt 122 while at the same time maintaining the conduit pressed against the rolling belt with a predetermined pressure that depends upon the compression of the springs under the platform 125.

Each of the rolling belts 122 (Fig. 1A) is an endless belt running on spaced rollers 136 and 137. The roller 136 is the driving roller and is secured to a shaft 139 which is driven by a gear 140 from a larger gear 141 on a shaft 142. This shaft 142 is driven by a sprocket 144 which is rotated from the driving mechanism 56 through a chain 146, the slack of which is adjustable by an idler 147. There are preferably three sprockets 54 on the shaft 55 for driving the respective chains 53, 89 and 146. Since the sprockets 54 are all secured to the same shaft 55, it will be evident that the various mechanisms driven by the chains 53, 89 and 146 always remain in time relation with one another.

The roller 137 is supported from a shaft 149 and is an idler roller. The lower run of the rolling belt 122 between the rollers 136 and 137 is provided with a plurality of idler rollers 151 for holding the belt 122 down against successive conduits 61 passing through the space between the conveyor 21 and the rolling belt 122. By preventing excessive displacement of the lower run of the rolling belt 122, the pressure of the conduit 61 against the platform 125 is maintained more nearly uniform.

The shafts 139 and 149, and the axles of the rollers 151 are supported from the upper frame 13 of the machine. This upper frame is adjusted by mechanism which will be described, so as to make the lower runs of the rolling belts 122 hold the conduit 61 and platforms 125 down at a level at which the conduit is in contact, preferably light contact, with the rubber insert 25. As the conduit rolls, the label 92 is wiped across the rubber insert and the entire adhesive-covered surface of the label is pressed against the surface of the conduit. The rolling belts 122 and the platforms 125 are long enough to cause several complete revolutions of the conduit, the actual number of revolutions depending upon the diameter of the conduit.

Beyond the end rollers 137 of the rolling belts 122, the platforms 125 terminate and the conveyors 21 turn downward around their sprocket 20 so that conduits on the conveyors drop off into a rack or other means provided for receiving them at the discharge end of the machine.

Fig. 3 shows the way in which each of the platforms 125 is connected to the frame 13 of the label attaching machine. The platform 125 has a plurality of screws 154 extending downward through bores 156 in the frame 13. These screws 154 are threaded into the bottom of the platform 125 but the portions of the screws that extend through the bores 156 are smooth and have running clearance so that the screws are free to slide up and down in the bores. There are heads 158 at the lower ends of the screws 154. These heads are located in counterbores.

Coil springs 127 are seated in recesses in the frame 13 and extend upward into contact with the bottom of the platform 125. These coil springs are under sufficient compression to force the platform 125 upward until the screw heads 158 strike against the ends of the counterbores.

When a conduit 61 is pressed downward against the platform 125, the springs 127 yield sufficiently to provide space for the passage of the conduit 61, and the compression of these springs causes them to maintain an upward thrust on the platform 125 so that the conduit 61 is held against the rolling belt 122 throughout the full length of the bottom run of the belt 122.

The platform, which is preferably of metal, has a lower coefficient of friction than the rolling belt. This causes the conduit to be rolled between the surfaces of the belt and platform in the direction

of the belt travel, and as a result the direction of rolling is controlled and the eventual complete sealing of the label around the conduit is performed.

Mechanism is provided for moving the upper frame 13 on the vertical columns 10 to adjust the machine for articles of different size. This mechanism includes a pinion 165 (Fig. 2a) secured to a shaft 166 supported by bearings in a bracket 168 which forms a part of the adjustable upper frame 13. This pinion 165 meshes with a rack 170 on the face of an insert which is secured to one of the vertical posts or columns 10. Rotation of the pinion 165 causes it to move along the rack 170 and to raise or lower the upper frame 13 depending upon the direction of rotation of the pinion.

The pinion 165 is rotated by a worm wheel 172 secured to the shaft 166 and meshing with a worm 174. This worm 174 is connected with a shaft 176 that turns in bearings in the bracket 168, and there is a hand wheel 178 for rotating the shaft 176 whenever the adjustment of the machine is to be changed. The pitch of the worm 174 is low so that the worm provides a self-locking motion-transmitting connection between the hand wheel 178 and the rack and pinion that raise and lower the upper frame. Because of this self-locking feature, the upper frame will remain in any adjusted position until the hand wheel 178 is again operated to change the adjustment.

When the invention is embodied in a machine of small size, the adjustment of the upper frame 13 can be effected by applying a raising or lowering force to the frame 13 on one side only, as illustrated in the drawing. On machines of larger size, however, it is desirable to provide rack and pinion mechanism, similar to the rack 170 and pinion 165, at both sides of the machine so as to move the upper frame 13 uniformly without setting up excessive stresses in the frame. When the rack and pinion mechanism is used on both sides of the machine, it may be operated from a single hand wheel.

Adjustment of the spacing of the upper frame 13 from the lower fixed portion of the machine moves the label feeding mechanism, the label attaching ram, and the rolling belts toward or away from the conveyor. The supporting platforms 125 do not move with the upper frame, and the spacing between these platforms and the rolling belts is, therefore, increased or decreased by adjustment of the upper frame 13 to accommodate conduits of different diameter.

Fig. 5 shows the way in which the operation of the clutch 112 is controlled by the presence or absence of articles on the conveyor at the label attaching station.

The clutch 112 has a trip cam 184 and a positive stop cam 185. A trip lever 187 engages a shoulder of the cam 184 to cause the clutch to disengage. A stop lever 188 has a latch 189 at one end in position to engage in a notch 190 located in the periphery of the positive stop cam 185.

The trip lever 187 and the stop lever 188 are supported on a common pivot shaft 191. Both levers are normally held in contact with the peripheries of their cams, the trip lever 187 by a tension spring 193 and the stop lever 188 by compression spring 194.

A plunger 196 of a solenoid 197 is connected with the trip lever 187. Whenever the solenoid 197 is energized, the plunger 196 pulls the trip lever 189 away from its cam 184 against the tension of the spring 193. When the supply of electricity to the solenoid is shut off, the spring 193 pulls the trip lever 187 back into contact with the trip cam 184 so that the shoulder on the trip cam will again come into contact with the end of the trip lever 187 as the trip cam rotates with the clutch.

There is a stud 200 extending from one side of the trip lever across the top of the stop lever 188. Whenever the trip lever 187 is pulled down by the solenoid 197, the stud 200 pushes the stop lever 188 downward and withdraws the latch 189 from the recess 190 of the positive stop cam 185.

The solenoid 197 is connected in the circuit with the microswitch 110. This switch 110 is normally held open by a spring and it is closed by pressure of the trip lever 105 at the label attaching station when this trip lever has a conduit resting upon it. The presence of a conduit on the trip lever 105, therefore, closes the switch 110 and energizes the solenoid 197 so that both of the levers 187 and 188 are moved away from their cams 184 and 185. This movement of the levers 187 and 188 causes the clutch to engage and rotate through one revolution.

If another conduit is brought to the label attaching station during this revolution of the clutch 112, the trip lever 105 will be again depressed, and the levers 187 and 188 will be held away from their cams at the time that the shoulder and notch of the cams come into the angular positions at which they would be engaged by the levers 187 and 188. The clutch will, therefore, make another revolution; and as long as successive conduits are brought into position to depress the trip lever 105, the clutch remains engaged and the machine continues to operate and apply labels to successive conduits as previously described.

If there is at any time a depression of the conveyor in which no conduit is carried, the trip lever 105 will remain in raised position when that depression of the conveyor reaches the label attaching station; and the switch 110 will be open when the shoulder and notch of the cams 184 and 185 reach the angular positions for contact with the trip lever 187 and stop lever 188, respectively. Since the solenoid 197 is not energized when the switch 110 is open, the trip lever 187 and stop lever 188 cause the clutch to stop and disengage so that movement of the conveyor can continue without having the label feed and label attaching mechanisms operate.

The preferred embodiment of the invention has been illustrated and described but changes and modifications can be made and some features can be used alone or in different combinations without departing from the invention as defined in the claims.

What is claimed is:

1. A machine for applying adhesive labels to substantially cylindrical articles, said machine having a label applying station with means for moving a label into contact with a limited portion of the longitudinal length of an article at the station, a conveyor that moves successive articles to and beyond the label applying station, apparatus beyond the station in position to contact with a different portion of the longitudinal length of the article from that to which the label was applied, said apparatus being movable in a direction to roll each successive article that comes from said station, and a contact pad

across which the label is wiped as the article rolls.

2. A labeling machine for generally cylindrical articles, said machine including a conveyor having spaced notches along its length for holding successive articles, a label applying station at a location along the course of the conveyor, means at said station that move a label into contact with a limited portion of the longitudinal length of the article, a support extending along a part of the length of the conveyor in position to lift articles part way out of the notches of the conveyor after the articles travel beyond the label applying station, and a movable contact that bears against a different portion of the longitudinal length of the article from that portion to which the label was applied, and that rolls the articles on said support while they are held part away out of said notches by said support.

3. A labeling machine for generally cylindrical articles, said machine comprising a conveyor having notches spaced along its length for holding successive articles, a label applying station located at a region along the conveyor and including apparatus that attaches a label to an article at the station along one edge of the label, a support extending along a portion of the length of the conveyor beyond the label attaching station, said support being in the path of the articles and beginning at a location beyond the label attaching station in position to lift the articles part way out of the notches of the conveyor, endless belts above the articles and with which the articles are brought into contact when raised in the notches of the conveyor by said support, the endless belts having surfaces with a coefficient of friction greater than that of the support, and each of said endless belts being located beyond the label and on a different side of the label longitudinally of the article, and spring means maintaining a yielding pressure of the articles against the endless belt.

4. A labeling machine comprising a conveyor having surfaces spaced along its length for holding articles that are to be labeled, a label attaching station located at a region along the course of the conveyor, intermittent-motion driving mechanism for the conveyor with means for stopping the conveyor for a limited period as each article reaches the attaching station, an endless belt above the level of the conveyor and having one run extending generally parallel to the conveyor, a support beginning at a location beyond the label attaching station and extending along a portion of the length of the conveyor beyond the attaching station, said support being located in position to lift the articles out of contact with the article holding surfaces of the conveyor and into contact with the endless belt, and power mechanism for driving the belt continuously and at a speed somewhat higher than the maximum speed of the conveyor during its intermittent motion.

5. A labeling machine comprising a conveyor having surfaces for holding articles spaced along the length of said conveyor, a label applying station located along the course of the conveyor, a platform at one side of the conveyor beginning at a location beyond the label attaching station and extending along a portion of the length of the conveyor beyond the label applying station, a device at said station that applies one axially-extending edge of a label to each article as it comes to the label applying station, said platform having an inclined surface that extends from a level below the bottom of an article on the conveyor to the level somewhat higher than the bottom of the article so that successive articles extending beyond the sides of the conveyor are lifted by said platform with a camming action as the conveyor advances the articles along the length of the platform, a belt located at a level higher than the platform and in position to contact with articles that are lifted by the platform, said belt having a plurality of idler rollers along the run of the belt that contacts with the articles, and said platform having springs that hold the articles against the belt with a yielding force, mechanism that drives the belt at a faster speed than the conveyor, and a pad located under the region of the article to which the label is applied, said pad being in position to bear lightly against the label to wipe and smooth the label as the article is rotated by the belt across the pad with friction contact.

6. A labeling machine including a conveyor that advances successive articles through the machine, a label applying station with means that connect an adhesive label to each article along one edge of the label, article rolling apparatus beyond the label attaching station including one or more devices that contact with the article at zones beyond the region to which the label is applied, and a pad that is located between the zones of contact of said rolling apparatus with the article and that wipes across the label to bring the entire adhesive surface of the label into contact with the article as the article is rotated by the article rolling means.

7. A machine for attaching labels to the surface of generally cylindrical articles, said machine comprising a conveyor with surfaces for holding articles at spaced locations along its length with the articles positioned so that their axes extend substantially at right angles to the direction of movement of the conveyor, a fixed frame on which the conveyor moves, label attaching mechanism that moves through a stroke toward and from the conveyor and into contact with successive articles to attach one edge only of a label to the articles as each article reaches a label attaching station of the machine, rolling apparatus located beyond the label attaching station and along the path of the articles as they move along the conveyor, to wipe the entire area of the label into contact with the article, bearings on which the label attaching mechanism moves through its stroke, other bearings on which the rolling apparatus operates, and mechanism for adjusting said bearings toward and from the fixed frame to accommodate the machine to articles of different diameter.

8. A label attaching machine comprising a fixed frame and another frame movable toward and from the fixed frame, a conveyor with spaced surfaces that hold articles as they are carried through the machine by the conveyor, bearing means supporting the conveyor from the fixed frame, a label attaching station with mechanism that moves through a stroke toward and from the conveyor to attach a label, along one edge only of the label, to each successive article as it reaches the label attaching station, a belt having a run extending generally parallel to the conveyor and in position to contact with and rotate articles carried by the conveyor beyond the label attaching station to wipe the entire area of the label into contact with the article, bearings on which the label attaching mechanism moves through its stroke, other bearings from which

the belt is operated and supported, all of said bearings being carried by the movable frame and being adjustable therewith to accommodate the machine to articles of different size.

9. A label attaching machine comprising a fixed frame, two endless belt conveyors extending parallel to the conveyor and spaced from one another, rotatable supporting means for the conveyors carried by the fixed frame, article holding means spaced from one another along the length of each conveyor and in position to hold elongated substantially cylindrical articles with the articles extending across the space between the conveyors and with the axes of the articles substantially at right angles to the direction of movement of the conveyors, a label attaching station located along the length of one of the conveyors, two endless belts, each having a run extending substantially parallel to and along a portion of a run of one of the conveyors, said belts being located in position to contact with successive articles on the conveyors at regions adjacent to opposite ends of said articles and only at said regions for applying equal rotating force to the opposite ends of said articles as they travel along the length of the conveyors, and mechanism for moving the belts at a speed in excess of the speed of the conveyors.

10. A label attaching machine including a conveyor on which there are spaced holders for articles that are to be moved through the machine, a label applying station along the course of the conveyor, a label feed device at said station, common driving mechanism for the conveyor and label feed device, motion transmitting means between the common driving mechanism and the label feed device including a cam follower that operates the label feed device, a cam for displacing the follower, and an automatic clutch that stops the cam after each operation when the follower is in position to retract the label feeding device.

11. The label attaching machine called for by claim 10 with the cam operated by a one-turn clutch which automatically disengages after each operation of the label feeding device, and clutch control means for initiating another operation of the clutch, said control means including a trip element that is displaced by each article as it reaches the label applying station.

12. A label attaching machine comprising a conveyor with means for holding successive articles at predetermined spaced regions along the conveyor, a label applying station along the course of the conveyor, a label feed device that moves successive labels into position for attaching them to successive articles, a ram that presses each label into contact with the corresponding article, cam means that operate the label feeding device, other cam means that operate the ram, a common shaft for both of the cam means, and a common one-turn clutch that operates the shaft in timed relation with the movement of the conveyor.

13. A label attaching machine including a conveyor with means for holding articles at spaced regions along the length of said conveyor, a platform located along the conveyor, said platform having a sloping cam surface at a region intermediate the opposite ends of the travel of the articles through the machine, the cam extending from a lower level upward into the path of the articles to lift the successive articles on the conveyor during a portion of their travel, and means for causing the articles to roll on the platform while thus lifted with respect to the conveyor.

14. A label attaching machine including a conveyor with means for holding an article while both ends of the article project beyond the sides of the conveyor, guides extending parallel with the conveyor and in position to prevent transverse displacement of the articles on the conveyor, platforms extending lengthwise of the conveyor and located on both sides of the conveyor, said platforms having sloping cam surfaces at a region intermediate the opposite ends of the travel of the articles through the machine, the cams extending from a lower level upward into the path of the articles to lift successive articles in the conveyor during a portion of their travel, and means for rolling articles along said platforms while thus lifted in the conveyor.

15. A label attaching machine including a conveyor with retaining surfaces for holding articles at spaced regions along the length of the conveyor as they travel toward a discharge end of the conveyor, a platform extending along a portion of the course of the conveyor nearer to the discharge end of the conveyor and in the path of the articles on the conveyor, said platform comprising a sloping surface with which successive articles come into contact and by which said articles are lifted with a camming action to remove the weight of the articles from the conveyor while leaving the articles still below the upper limits of said retaining surface, spring means yieldingly supporting the platform, and rolling apparatus including a moving surface located above the platform and in contact with the articles that are raised by the platform for causing rotation of said articles as they move along the platform.

JOSEPH WEIMONT.

References Cited in the file of this patent

UNITED STATES PATENTS

Number	Name	Date
539,659	Adamson	May 21, 1895
1,700,005	Wall	Jan. 22, 1929
1,968,881	Edwards	Aug. 7, 1934
2,087,472	Dyment	July 20, 1937
2,168,422	Rider	Aug. 8, 1939
2,214,096	Weiss	Sept. 10, 1940
2,276,958	Goldsmith	Mar. 17, 1942
2,362,413	Shields	Nov. 7, 1944
2,424,540	Bogoslowsky	July 29, 1947
2,468,619	Franke	Apr. 26, 1949
2,495,003	Haas	Jan. 17, 1950
2,525,741	Von Hofe	Oct. 10, 1950