April 21, 1953 F. J. ORZEL 2,635,450

BUILDING CONSTRUCTION AND SLAB THEREFOR

Filed May 20, 1948 4 Sheets-Sheet 1

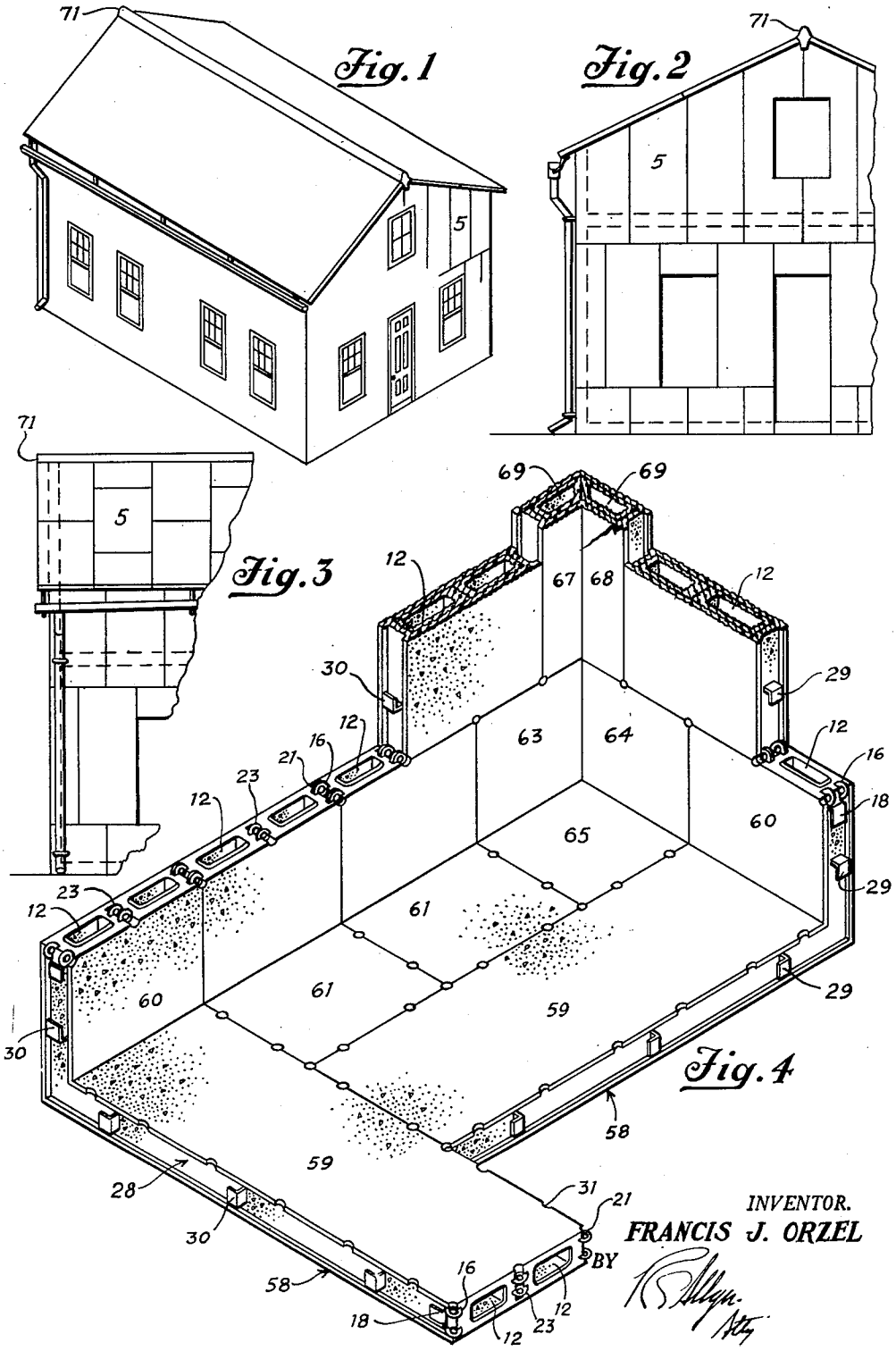

April 21, 1953 F. J. ORZEL 2,635,450

BUILDING CONSTRUCTION AND SLAB THEREFOR

Filed May 20, 1948 4 Sheets-Sheet 2

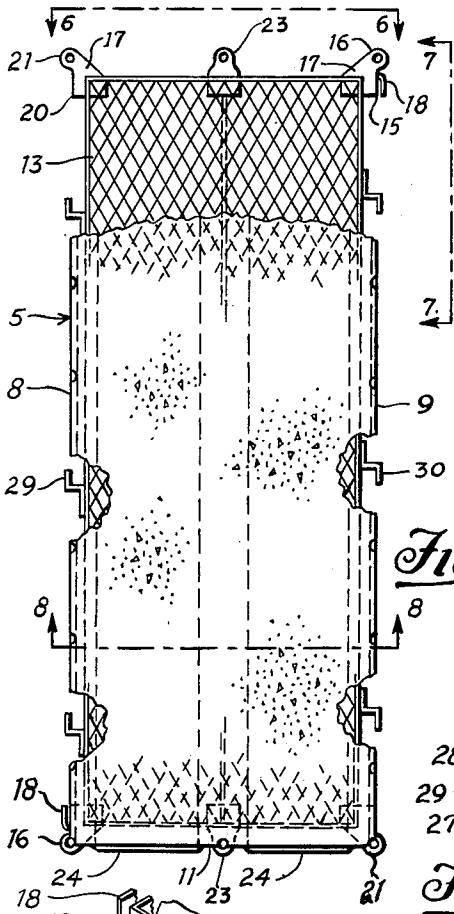

Fig. 5

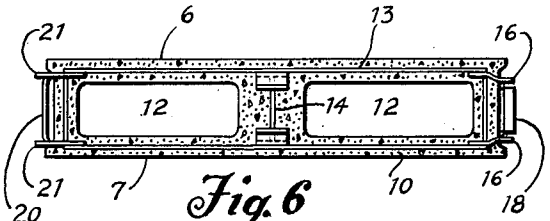

Fig. 6

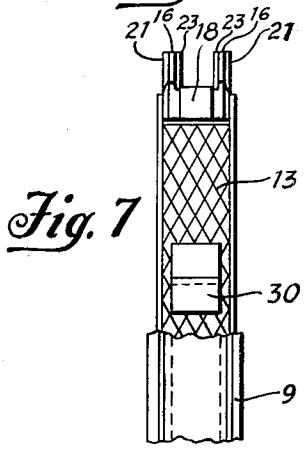

Fig. 7

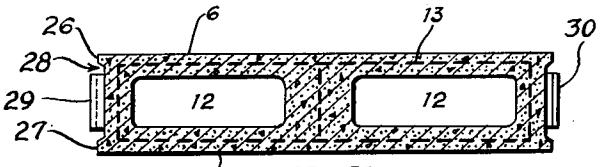

Fig. 8

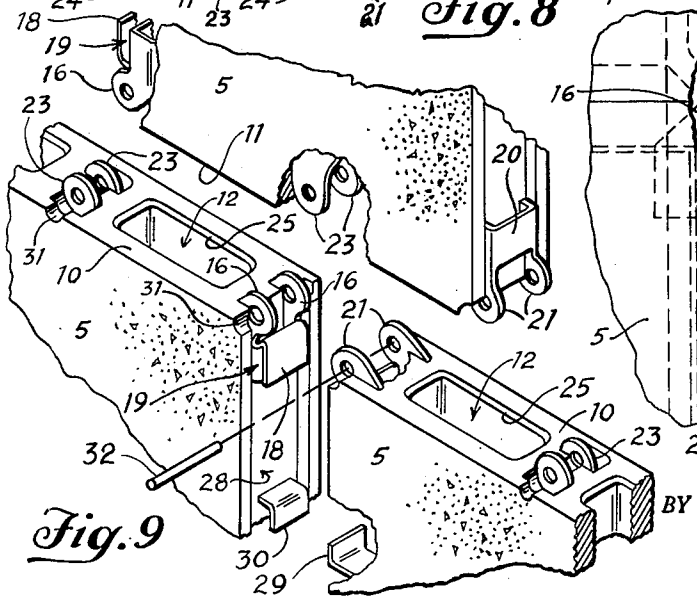

Fig. 9

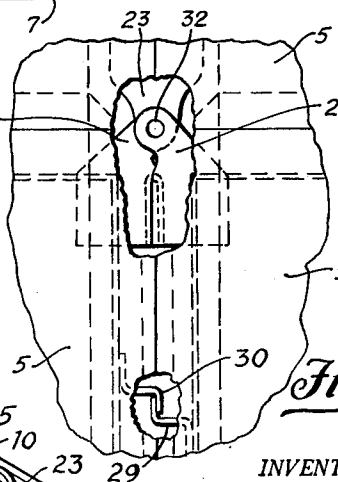

Fig. 10

INVENTOR.
FRANCIS J. ORZEL
BY

April 21, 1953 F. J. ORZEL 2,635,450

BUILDING CONSTRUCTION AND SLAB THEREFOR

Filed May 20, 1948 4 Sheets-Sheet 3

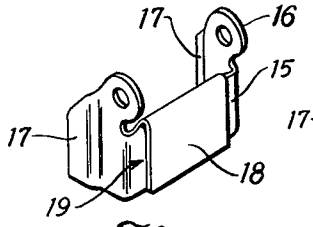

Fig. 11

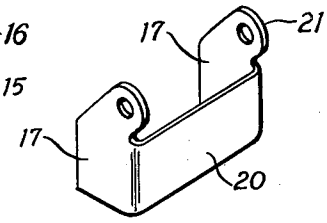

Fig. 12

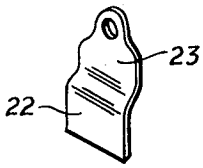

Fig. 13

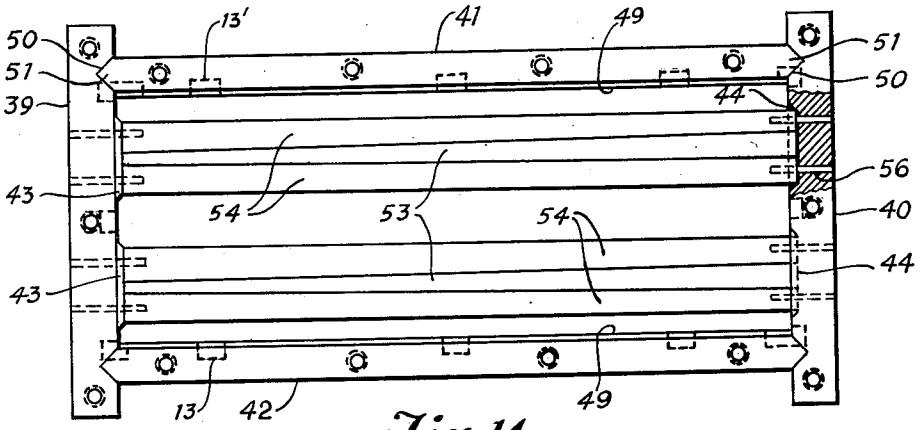

Fig. 14

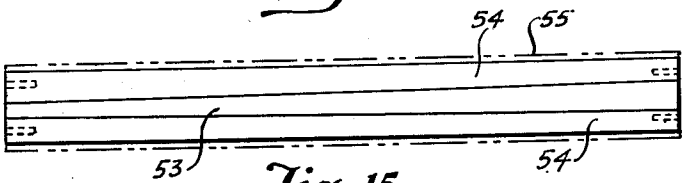

Fig. 15

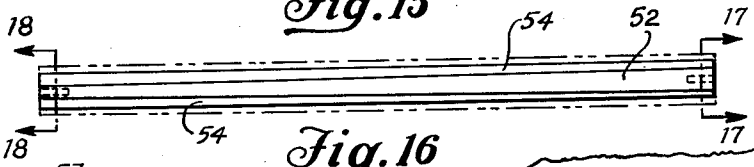

Fig. 16

Fig. 17

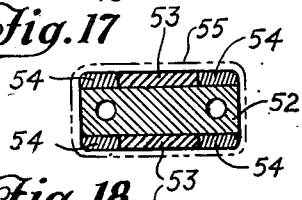

Fig. 18

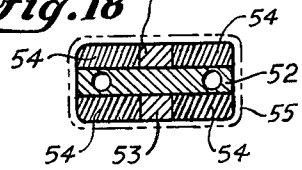

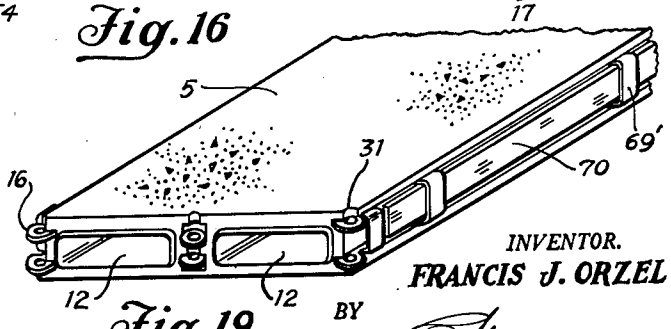

Fig. 19

INVENTOR.
FRANCIS J. ORZEL
BY

BUILDING CONSTRUCTION AND SLAB THEREFOR

Filed May 20, 1948 4 Sheets-Sheet 4

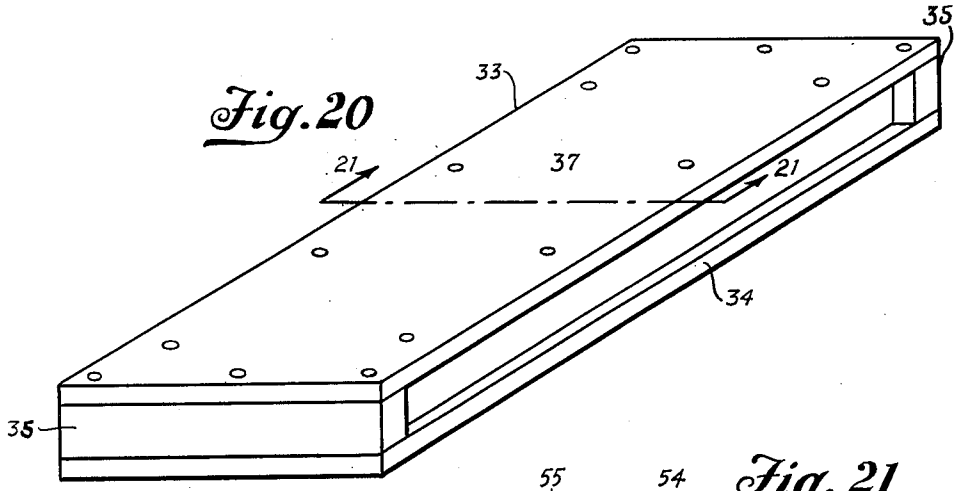

Fig. 20

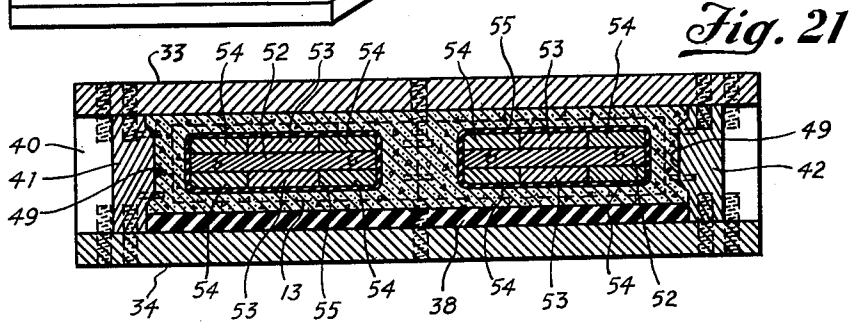

Fig. 21

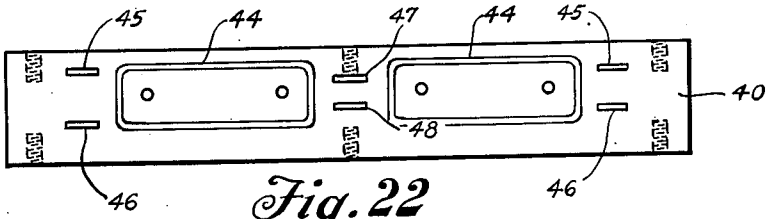

Fig. 22

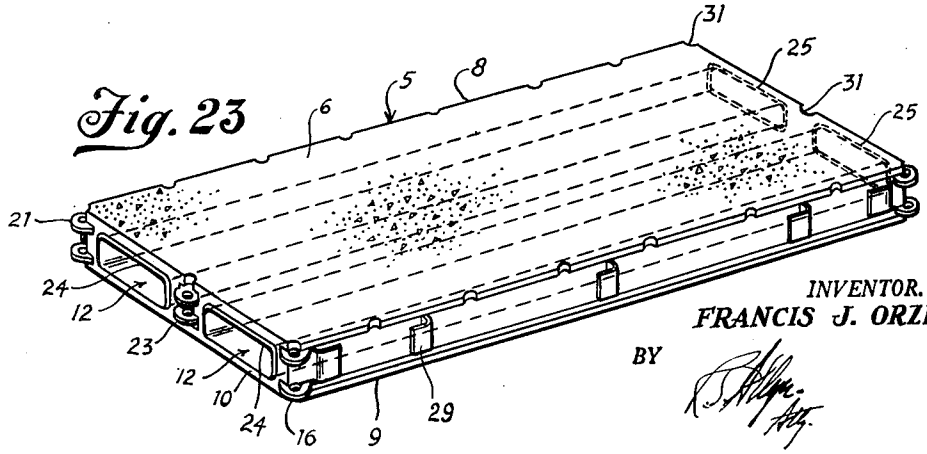

Fig. 23

INVENTOR.
FRANCIS J. ORZEL
BY

Patented Apr. 21, 1953 2,635,450

UNITED STATES PATENT OFFICE

2,635,450

BUILDING CONSTRUCTION AND SLAB THEREFOR

Francis J. Orzel, Flushing, N. Y., assignor to Agnes W. Orzel, Hackensack, N. J.

Application May 20, 1948, Serial No. 28,077

3 Claims. (Cl. 72—42)

1

This invention relates generally to building constructions and more particularly to structural units therefor and the method of making the units.

A prime object of the present invention is to provide a building construction that is cheaper in cost than any of the constructions on the market at the present time.

Another object is to provide a building construction composed of superimposed and juxtaposed slabs having communicating flues for passage of fluid to heat and cool, that is, to air condition the inside of the building.

Another object is to provide a building construction formed of building slabs, the outer faces of the slabs being formed of cold-repellant material and the inner faces thereof being formed of heat radiating material.

Another object is to provide a building construction formed of hollow slabs with interlocking elements on the ends and sides of said slabs.

Another object is to provide a concrete structural slab with metallic reinforcements and interlocking devices on said reinforcements.

Another object is to provide an improved and novel casting mold for casting a reinforced hollow concrete slab.

Another object is to provide an improved method of manufacturing a reinforced hollow concrete slab.

Another object is to provide new and improved devices for interlocking structural units.

Another object is to provide a wall construction composed of superimposed and juxtaposed slabs having metal reinforcing members locked directly to each other by metallic interlocking elements that contact face to face whereby the compression and tensional strains are absorbed by the metal of the slabs and such strains do not pass through the concrete.

Broadly the invention comprises a cement slab having flues extending therethrough from end to end. One face is formed of cold-repellant material and the opposite face of heat radiating material. A metallic reinforcing member is embedded in the material and interlocking elements are supported by said metallic member and extend outwardly of the slab. The invention also contemplates an improved casting mold for casting said slab and an improved method of making the slab.

Other objects and advantages of the invention will be apparent from the description thereof to follow taken in connection with the accompanying drawings in which—

2

Fig. 1 is a perspective view of a building built in accordance with one form of my invention.

Fig. 2 is a fragmentary front view thereof, on an enlarged scale, before the finishing operations take place.

Fig. 3 is a fragmentary side view thereof showing a portion of the roof structure before being finished.

Fig. 4 is a fragmentary perspective view of a floor and wall structure embodying a modified form of my invention.

Fig. 5 is a front view of an improved slab shown in Fig. 1 on an enlarged scale, parts being broken away.

Fig. 6 is an end view of the slab of Fig. 5 looking in the direction of the arrows 6—6 of Fig. 5.

Fig. 7 is a fragmentary side edge view looking in the direction of the arrows 7—7 of Fig. 5.

Fig. 8 is a cross-sectional view taken on the plane of the line 8—8 of Fig. 5.

Fig. 9 is a spread perspective view on an enlarged scale of an upper slab and two lower slabs showing the interlocking elements.

Fig. 10 is a fragmentary front view of the slabs of Fig. 9 in juxtaposed operative relation, parts being broken away.

Fig. 11 is a perspective detail view showing an interlocking element used on one corner of the slab.

Fig. 12 is a similar view showing an interlocking element used on the opposite corner of the slab.

Fig. 13 is a perspective detail view of an interlocking element used at the end of the slab.

Fig. 14 is a top plan view of a casting frame or dam with mandrels and reinforcing members in position thereon, parts being broken away.

Fig. 15 is a top plan view of a mandrel with a rubber sleeve thereover shown in dash lines.

Fig. 16 is a side view thereof.

Fig. 17 is a cross-sectional view taken on the plane of the line 17—17 of Fig. 16.

Fig. 18 is a cross-sectional view taken on the plane of the line 18—18 of Fig. 16.

Fig. 19 is a perspective view of a portion of a slab showing a modified form of interlocking element.

Fig. 20 is a perspective view of a casting mold.

Fig. 21 is a cross-sectional view taken on the plane of the line 21—21 of Fig. 20.

Fig. 22 is a face view of one of the end rails of the casting mold of Fig. 20.

Fig. 23 is a perspective view of the slab shown in Fig. 5.

A slab 5 made in accordance with the present invention includes a front face 6, a rear face 7, side faces 8 and 9 and end faces 10 and 11, with spaced flues 12, 12 running lengthwise through the slab. The material of which the slab is composed is preferably cold and heat resisting material for the outer or rear face 7 and heat radiating material for the inner or front face 6 and side and end faces. Suitable cold and heat resisting material for this purpose is a mixture of Portland cement, dicalite, vermiculite and asbestos. A suitable heat radiating material is a mixture of Portland cement and waylite. The outer or rear face 7 is thicker than the opposite face 6, and the slab may be of any desired length. A reinforcing tubular metal screen 13, rectangular in cross-section with a central web 14, is embedded in the material and surrounds the flues. At one end of the slab, for instance, the upper end as shown in Fig. 5, at the corner of the right hand side thereof, the metal screen 13 is provided with a metallic interlocking element in the form of a U-shaped plate 15 with perforated ear portions 16 formed integrally with the parallel arms 17 of said plate, said ears projecting slightly across the plate 15. Formed integrally with the upper edge of plate 15 and bent downwardly therealong and spaced therefrom is a plate 18 forming a socket or groove 19 between the plates 15 and 18. At the opposite corner of the same end of the slab is a U-shaped plate 20 similar to plate 15 with ears 21 but without a plate equivalent to plate 18. At the opposite or bottom end of the slab at the right hand corner thereof is another plate 20 and at the opposite left hand corner is another plate 15. Plate 20 is longer than plate 15 however to permit nesting of the ears 16 of plates 15 inside of the ears 21 of plates 20 when the slabs are end to end.

At the center of each end face 10 and 11, the screen 13 is formed with interlocking elements in the form of spaced plates 22 having inwardly offset perforated ear portions 23. The distance between the plates 22 is shorter than the length of the plate 15 so that the ears 23 of said plates 22 may be nested inside the ears 16 of plate 15 when the slabs are end to end. The ears 23 project through the material of the end faces and outwardly thereof, as shown in Figs. 9 and 23.

One end of the slab, for instance, end face 11 is formed with a peripheral flange 24 around the end of each flue 12 forming an extension of said end face, and the opposite end face, for instance, end face 10, is formed with a corresponding recessed portion 25 around the end of each flue forming a seat as shown in Fig. 23.

The side faces 8 and 9 of the slab are formed with overhanging top and bottom ledges 26 and 27, respectively, thereby forming recessed portions 28 therebetween. Spaced along one side of the screen 13 and protruding therefrom and through the material of the side face 8 of the slab are interlocking element in the form of angled lugs 29, the outer bent ends of the lugs being spaced from said side face and extending parallel thereto. On the opposite side of the screen are lugs 30 of similar construction protruding through side face 9 of the slab but offset slightly from lug 29. The bent end portions of lugs 30 which extend parallel to the side face 9 however are spaced further away from said side face than the ends of the lugs 29 and extend in a direction opposite to the direction of lugs 29 so that the ends of said lugs 29 and 30 may be nested and interlock with each other when the slabs are side by side as shown in Fig. 10.

The end faces 10 and 11 and the edges of the overhanging ledges 26 are formed with semi-circular grooves 31 which when the slabs are side by side in juxtaposed and superimposed relation form a circular opening.

In assembling the slabs, the lower end of a slab is mounted on the top ends of two adjacent lower slabs of a side wall so as to break joints therewith. The center interlocking elements 22 of the upper slab will interlock with the end interlocking elements 15 and 20 on the lower slabs whereby the ears 23 of the central elements 22 will be nested inside the perforated ears 16 of the element 15 and the ears 16 will be nested inside of the ears 21. During the interlocking operation, the overlapping ears are bent outwardly slightly to permit them to ride over the inner ears. When thus nested, the ears initially are slightly eccentric relative to each other but the perforations of the ears will be aligned sufficiently to receive a pin 32 passed through the openings formed by the semi-circular grooves 31 and through the aligned perforated ears for moving the ears to final concentric relationship and for holding the elements together under tension. Movement lengthwise of one slab relative to the next adjacent slab brings the side lugs 29 of one slab into nested and interlocking relation with the side lugs 30 of the adjacent slab. When the slabs are thus placed side by side to form the floor, grout is forced through the openings formed by the semi-circular grooves 31 thereby filling the recesses 28 between the slabs and covering the interlocking lugs 29 and 30 and permanently securing the slabs in position.

In making a slab such as shown in Fig. 5, a casting dam or frame such as shown in Fig. 14 is placed in a casting frame 33 (Fig. 20) which is supported on a table or the like (not shown). The box or frame 33 is rectangular in shape and consists of a floor 34, end boards 35 and a cover 37. A rubber mat 38 is mounted on the floor inside the boards and is provided with a design on its upper face, for example, intersecting lines to form a brick design.

The casting dam or frame is mounted on the mat and consists of end blocks or rails 39 and 40 and side rails 41 and 42. Along the inner surface of end rail 39 are formed two projections 43, 43 spaced from each other for making the recessed portions 25 of slab 5 and along the inner surface of end rail 40 are formed two concave recesses or depressions 44, 44 directly opposite the projections 43, 43 for making the flanges 24 of slab 5.

Each of the end rails 39 and 40 on its inner surface is formed with a pair of upper and lower slots 45 and 46, respectively, at each end thereof for receiving the end interlocking elements 15 and 20 of the sleeve 13 and with upper and lower slots 47 and 48, respectively, midway its ends, for receiving the center interlocking elements 22 for supporting the ends of the sleeve.

The side rails 41 and 42 are formed with projections 49 on their inner surfaces for making the recessed portions 28 of the slab. The end rails 39 and 40 are also formed with substantially V-shaped grooved portions 50 adjacent their ends for receiving the pointed end portions 51 on the side rails 41 and 42 whereby said end and side rails are detachably interlocked to each other.

In a tubular metal sleeve 13 such as hereinbefore described, a mandrel or core member is removably positioned on each side of its central

web 14. The mandrel or core comprises a wedge-shaped member 52 extending the length of the screen. Above and below the member 52 and centrally thereof and loosely placed are wedge-shaped members 53 having tapered side edges and being narrower than the member 52. Loosely mounted on the upper and lower surfaces of the member 52 on each side of the central members 53 are wedge-shaped strips 54, said strips having tapered side edges but their surfaces and side edges taper in a direction opposite to the direction of the taper of the surfaces and edges of the member 52 and members 53 so that when members 52, 53 and 54 are in juxtaposed position, they serve to complement each other so that the mandrel is of uniform thickness and width throughout its length. One end of the mandrel is recessed to fit over the projection 43 on the end rail 39 of the dam, and the other end of the mandrel is shaped to fit into the opposite recessed portion of the end rail 40 as shown in Fig. 14. A rubber sleeve 55 encircles the members 52, 53 and 54 throughout their length and holds them in nested position.

A metal sleeve 13 with its mandrel enclosed is mounted on one of the end rails of the dam, for example, on end rail 39 by inserting its perforated ear members 16 and 21 into the slots 45 and 46, and its ear members 23 in the slots 47 and 48 on the inner surface of said rail 39. Sleeve 13 may have laterally extending lugs 13′ protruding into slots in the inner face of the side rails 41 and 42 for supporting the sleeve. When the sleeve is thus positioned one end of the mandrel abuts against the projection 43 on the inner surface of rail 39.

Two of such sleeves 13 and associated mandrels may be mounted in the frame as shown in Fig. 14.

The opposite end rail 40 of the frame is then mounted across the opposite ends of the screens and mandrels whereby the ears 16 and 21 of the adjacent ends of the screens or sleeves project into the slot 45 and 46 of said end rail 40 and the adjacent ends of the mandrels project into the recessed portions 44 on the inner surface of said end rail 40. The mandrels may be securely fastened to the frame by pins 56 passing through aligned holes in the end rails 39 and 40 and in the ends of the wedge-shaped members 52.

With the parts thus supported in the casting box, the metal screens are spaced a distance from the rubber mat 38 on the floor of the box and from the top edge of the end and side rails of the dam, and the mandrels with their rubber sleeves are spaced from the screens. The screens however are further away from the mat than from the upper edges of the rails. The parts are now in position to receive the material. The cold and heat repellant material such as a mixture of Portland cement, dicalite, vermiculite and asbestos is poured into the bottom of the casting box. The box is then vibrated or moved up and down and sidewise by suitable mechanism (not shown) in order to give the box a compound motion while the material is being poured. Heat radiating material such as a mixture of Portland cement and waylite is then poured into the remaining top of the box while the box is being shaken as aforesaid. This shaking of the casting box assures that all voids will be filled with material. A flat cover 37 is then placed on top of the box and held thereon in any suitable manner until the material hardens. When the material has been hardened sufficiently, the cover

and end and side boards of the box may be disassembled leaving the formed slab with the mandrels in position therein. The mandrels are removed from the slabs by forcing the wedge-shaped center members 53 outwardly thereof in one direction and by forcing the other members 54 in the opposite direction. The rubber sleeves 55 can then be collapsed and pulled out leaving the flues 12 clear. The corner and center interlocking elements having been inserted into the slots 45 and 46 in the end rails 39 and 40 and being covered by the walls of said end rails, such interlocking elements will be free from cement and will project from the screen through the slight covering of cement on said screen at the end faces. The side lugs 29 and 30 will also project from the sides of the screen through the side faces of the slab.

In Fig. 4 is shown a fragment of a building built with modified forms of slabs including a number of angular slabs 58, with one angular portion 59 thereof disposed horizontally and forming part of the floor and the other angular portion 60, of shorter dimensions, forming part of the side wall. Other angular slabs 61, with angular portions of equal dimensions, form part of the floor and side wall. At the corner is a lower slab having vertical portions 63 and 64 disposed at right angles to each other and connected at their bottom ends by a horizontal portion 65. Each vertical portion 63 and 64 has a center flue. Above the lower corner slab is another corner slab having vertical angular portions 67 and 68 with a central flue 69 through each portion. The slabs 58, 61 and the corner slabs are otherwise constructed similarly to slab 5 and are provided with similar interlocking elements.

In Fig. 19 is shown a fragment of a slab 5 having a modified form of interlocking element including saddle members 69′ spaced along the side faces and adapted to align with similar saddle members at offset points along adjacent slabs for receiving a locking bar 70 whereby the slabs are interlocked in position.

Fig. 3 illustrates a portion of a roof structure formed with slabs 5 on both sides of a central ridge pole 71.

It will be noted that the metallic interlocking elements, which are secured directly to the metal sleeve or screen, contact each other face to face under tension when the slabs are assembled and the concrete abutments are in compression and the locking pins are in sheer whereby the compression and tensional strains are transmitted from metal screen to metal screen through said interlocking elements throughout the wall structure and do not pass through the concrete.

I claim:

1. A building slab having a rectangular cement body with a plurality of flues extending therethrough, a tubular metallic reinforcing member embedded in said body around said flues, a pair of spaced perforated ear members supported by said reinforcing member at each corner of the body, the ear members at one corner being spaced farther apart than the ear members at the opposite corner, a pair of spaced perforated ear members at each end of the body at its center spaced a distance shorter than the distance between the corner ear members, and saddle members supported by said reinforcing member and extending laterally from each side of the body.

2. A building construction including juxtaposed slabs, each slab having a rectangular

cement body with a plurality of flues extending therethrough, a tubular metallic reinforcing screen embedded in said body around said flues, a pair of spaced perforated ear members supported by said screen at each corner of the body, saddle members projecting laterally from each side of the body the corner ear members of one slab being sprung over and overlapping the adjacent corner ear members of the adjacent slab, said overlapping ear members being under tension, and pins extending through the overlapped ear members for locking said members together, said pins being under sheering strain whereby tension is transmitted from one slab to the next adjacent slab, the saddle members of adjacent sides of the slabs being in longitudinal alignment and a locking bar extending through the aligned saddle members.

3. A building construction including superimposed and juxtaposed slabs, each slab having a rectangular cement body with a plurality of flues extending therethrough, a tubular metallic reinforcing screen embedded in said body around said flues, a pair of spaced perforated ear members supported by said screen at each corner of the body, a pair of spaced perforated ear members at each end of the body at its center, the corner ear members of one juxtaposed slab being sprung over and overlapping the adjacent corner ear members of the adjacent juxtaposed slab, the corner ear members of the adjacent end of a superimposed slab being sprung over and overlapping the central ear members of the adjacent juxtaposed slab thereunder, and the central ear

members of said superimposed slab being aligned with the adjacent corner ear members of the adjacent juxtaposed slabs thereunder and pins extending through the overlapping and aligned ear members.

FRANCIS J. ORZEL.

References Cited in the file of this patent

UNITED STATES PATENTS

Number	Name	Date
761,711	Redfern	June 7, 1904
1,113,268	Watson	Oct. 13, 1914
1,516,473	Davis	Nov. 18, 1924
1,821,015	Hull	Sept. 1, 1931
1,886,962	La Roche	Nov. 8, 1932
2,013,367	Thompson	Sept. 3, 1935
2,035,595	Crowe	Mar. 31, 1936
2,065,355	Twachtman	Dec. 22, 1936
2,078,144	Kenan	Apr. 20, 1937
2,091,061	Waugh	Aug. 24, 1937
2,126,309	Cade	Aug. 9, 1938
2,138,015	Barnhardt	Nov. 29, 1938
2,172,052	Robbins	Sept. 5, 1939
2,192,567	Waugh	Mar. 5, 1940
2,306,548	Leemhuis	Dec. 29, 1942
2,335,948	Leemhuis	Dec. 7, 1943
2,359,471	Ewing	Oct. 3, 1944
2,416,559	Wilson	Feb. 25, 1947

FOREIGN PATENTS

Number	Country	Date
17,972	Great Britain	Aug. 10, 1906