Jan. 20, 1953 H. J. MUMMA 2,625,885

INK PUMP

Filed March 4, 1948 2 SHEETS—SHEET 1

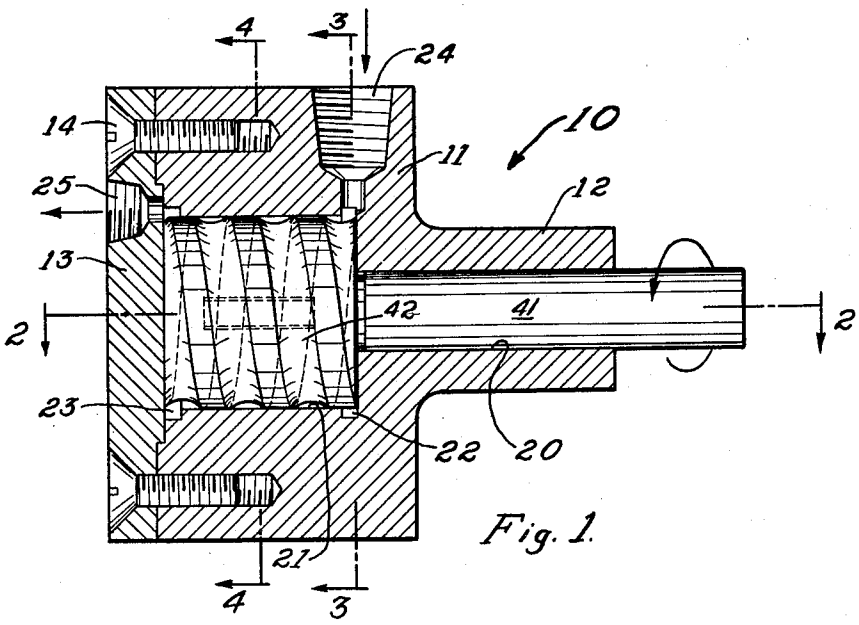

Fig. 1.

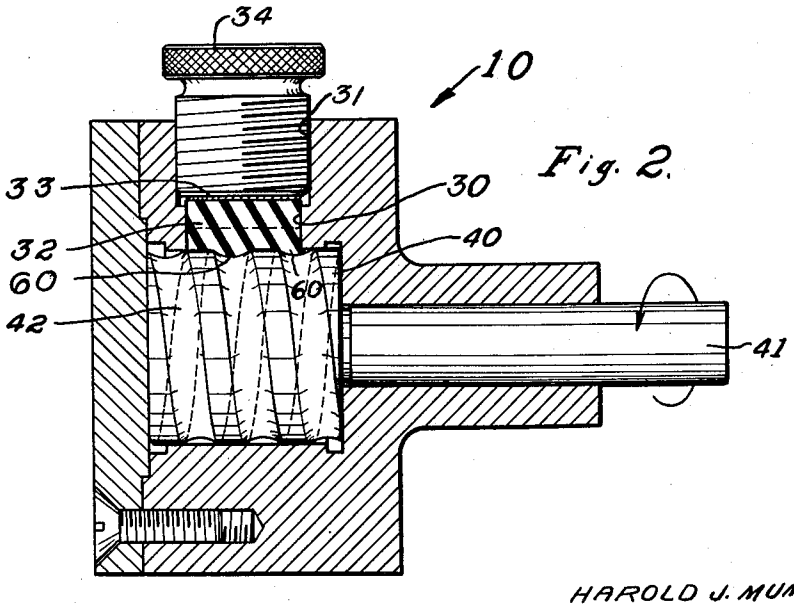

Fig. 2.

HAROLD J. MUMMA
INVENTOR

ATTORNEY

INK PUMP

Filed March 4, 1948 2 SHEETS—SHEET 2

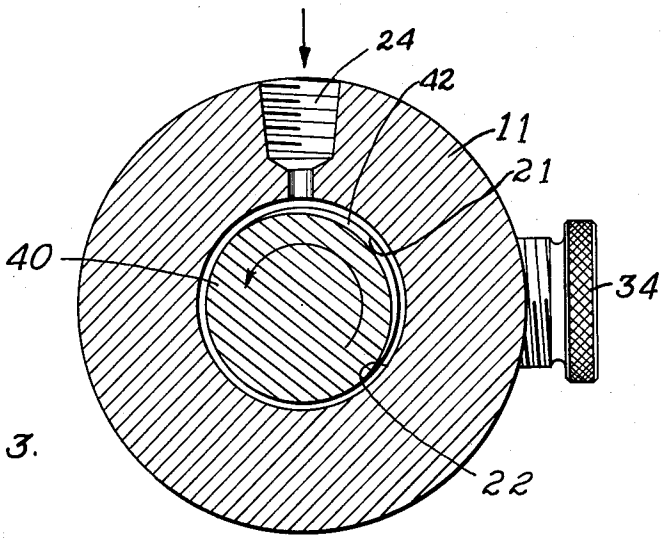

Fig. 3.

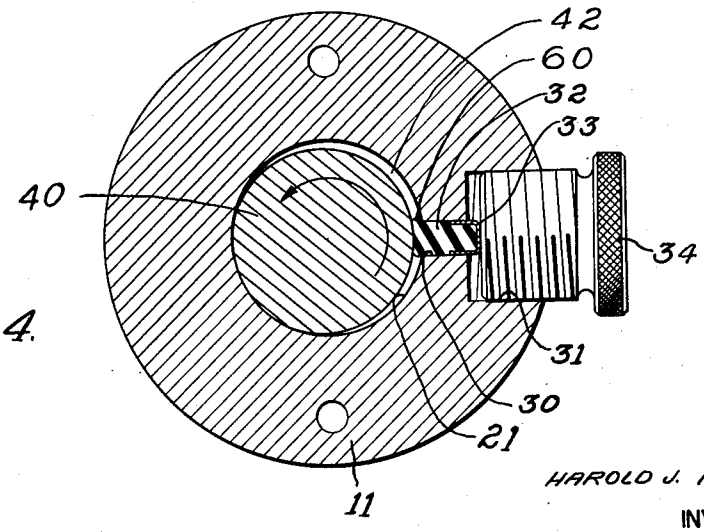

Fig. 4.

HAROLD J. MUMMA
INVENTOR

ATTORNEY

Patented Jan. 20, 1953 2,625,885

UNITED STATES PATENT OFFICE

2,625,885

INK PUMP

Harold J. Mumma, Riverside, Calif., assignor to Food Machinery and Chemical Corporation, a corporation of Delaware

Application March 4, 1948, Serial No. 13,042

3 Claims. (Cl. 103—122)

1

This invention relates to pumps and is particularly useful in the pumping of liquids in minute closely controlled quantities such as is necessary in the feeding of ink to a printing machine.

It is an object of this invention to provide a simple, novel and inexpensive precision pump.

The manner of accomplishing the foregoing object as well as further objects and advantages will be made manifest in the following description taken in connection with the accompanying drawings in which:

Fig. 1 is an enlarged longitudinal sectional view of a preferred embodiment of the pump of the invention.

Fig. 2 is a longitudinal sectional view taken on the line 2—2 of Fig. 1.

Fig. 3 is a cross sectional view taken on the line 3—3 of Fig. 1.

Fig. 4 is a cross sectional view taken on the line 4—4 of Fig. 1.

Referring specifically to the drawings, the invention is therein shown as embodied in a pump 10 and a body 11 having a bearing 12 and having a cap 13 secured thereto by screws 14.

The bearing 12 has a bore 20 which is counterbored to provide a cylindrical pump chamber 21, the latter having annular radial channels or recesses 22 and 23 at its opposite ends.

Formed in the body 11, and communicating with the channel 22, is a tapped hole 24 for admitting liquid to the pump.

Formed in the cap 13 and communicating with the channel 23, for the purpose of leading away liquid discharged from said pump, is a tapped hole 25.

Formed in the cylindrical surface of the chamber 21 and extending radially therefrom in that portion of the body 11 disposed between the channels 22 and 23 is an elongated squeegee hole 30 which connects with a tapped hole 31.

Shaped to fit the hole 30 and adapted to be inserted inwardly in this hole is a squeegee 32, the latter having a ferrule 33 to permit pressure to be applied thereto to effectively push said squeegee inwardly from said hole 30 into the chamber 21 by the screwing of a thumb screw 34 inwardly into the tapped hole 31.

The squeegee 32 is preferably of relatively soft rubber with a durometer hardness of about 30 although variations in hardness, within a considerable range, are permissible.

The pump 10 has a rotor 40 formed integral with a shaft 41, the rotor being cylindrical and formed to closely fit the chamber 21 and be rotatable therein, the shaft 41 journalling in the

2

bore 20 of the bearing 12 and being employed for rotation of the rotor 40 in said chamber.

The cylindrical peripheral surface of the rotor 40 has a single pitched helical groove 42 formed therein. This groove has a rounded cross sectional contour and is sufficiently shallow so that only a medium amount of pressure need be applied by the screw 34 to the squeegee 32 to cause the latter to conform with the peripheral surface of the rotor 40 including a portion of the latter occupied by the groove 42 and to remain in such conformation with said surface when the rotor 40 is rotated.

Referring to Fig. 2 it may be noted that the conformation of the squeegee 32 with the rotor closes the groove 42 where this groove is disposed adjacent to the squeegee. This closure remains in the plane of the squeegee while the rotor 40 turns in the chamber 21. The helical character of the groove 42 however causes a continuous leftward progression of those portions of this groove which are successively disposed upwardly in the plane of the squeegee. Dams 60, formed by the rubber of the squeegee 32 expanding downwardly, extend into and close these upwardly disposed portions of groove 42. As the locations of the latter progress leftward these dams progress along the plane of the squeegee by a sort of wave movement in the rubber. Dams 60 thus effect a continuous closure of those portions of groove 42 which are successively presented upwardly in the plane of the squeegee 32 within the length of the latter.

Thus, after a dam 60 has initially formed at the right end of squeegee 32 to seal off the adjacent portion of groove 42, subsequent rotation of the rotor increases the length of that portion of the groove 42 which is located between this dam and the right end of the groove 42.

This end of the groove 42, of course, is in constant communication with the suction channel 42, and increasing the length of the closed portion of groove 42 communicating with this suction channel, sucks liquid from said channel into the suction end of said groove.

This suction continues with the progress leftward of this particular squeegee dam until a new squeegee dam is formed from the right end of the squeegee 32. Such a dam, shown forming at the right in Fig. 2, will close off the portion of the groove 42 receiving this dam as soon as the rotor 40 has been turned another 90° in the direction of the arrow encircling shaft 41.

With the formation of such a new dam at the right end of the squeegee 32, the suction process

above described starts again and the liquid trapped between the two dams is merely conveyed leftward and discharged from the left end of the groove 42 into the channel 23. Thus, a constant flow of liquid is pumped through the groove 42 from the suction channel 22 into the discharge channel 23 equal to the displacement of a single turn of the helical groove 42 for each revolution of the rotor 40.

The pump 10 is especially useful in pumping liquids in small precisely measured amounts such as is required in feeding ink to a printing or stamping machine. When so used, the shaft 41 is usually equipped with a ratchet wheel by which this shaft and the rotor 40 are turned through a predetermined small angle each time it is desired to operate the pump 10 to feed ink to the printing machine. This particular use for the pump 10 is mentioned for illustrative purposes only as it is applicable to a wide variety of uses.

The claims are:

1. In a pump the combination of: a body providing a cylindrical chamber having spaced inlet and outlet openings and having a hole extending radially therefrom; a cylindrical rotor closely fitting said chamber and rotatably mounted therein; and a squeegee member of soft resilient rubber like material pressurally confined within said hole to expansively engage in fluid tight relation the peripheral surface of said rotor, there being a shallow helical groove formed in said surface and extending entirely around said rotor so that two turns of said groove simultaneously underlie said squeegee, said groove having an arcuate cross section permitting said squeegee to extend into said groove to form a fluid tight dam in each turn of said groove underlying said squeegee, and permitting the locations of said dams to shift axially while said dams continue to dam said groove as said rotor rotates in said chamber, due to the resilient flow of the material

of said squeegee and without bodily movement of the latter.

2. A combination as in claim 1 in which said body includes a wall enclosing one end of said cylindrical chamber and having a bearing bore concentric with said chamber, and a second wall closing the opposite end of said chamber, there being annular recesses formed at the juncture of said end walls with the opposite ends of said chamber, said recesses communicating respectively with said inlet and outlet chamber openings, and a shaft journaled in said bearing bore and united with said rotor for transmitting rotary motion to said rotor.

3. A combination as in claim 1 in which said hole is connected with the exterior of said body by a threaded bore; a ferrule covering the outer end of said squeegee; and a screw screwed into said threaded bore and engaging said ferrule to place a positive unyielding pressure on said sqeegee causing said squeegee to flow into those portions of said helical groove underlying said squeegee.

HAROLD J. MUMMA.

REFERENCES CITED

The following references are of record in the file of this patent:

UNITED STATES PATENTS

Number	Name	Date
1,690,728	Jaworowski	Nov. 6, 1928
1,874,667	Wada	Aug. 30, 1932
1,889,822	Clapp, et al.	Dec. 6, 1932
2,015,123	Pennell	Sept. 24, 1935
2,368,789	Tucker	Feb. 6, 1945

FOREIGN PATENTS

Number	Country	Date
72	Great Britain	1854
363,148	Italy	Sept. 20, 1938