Nov. 11, 1952 W. H. KOHL 2,617,960

RESNATRON FILAMENT BASKET

Original Filed Nov. 19, 1949 3 Sheets-Sheet 1

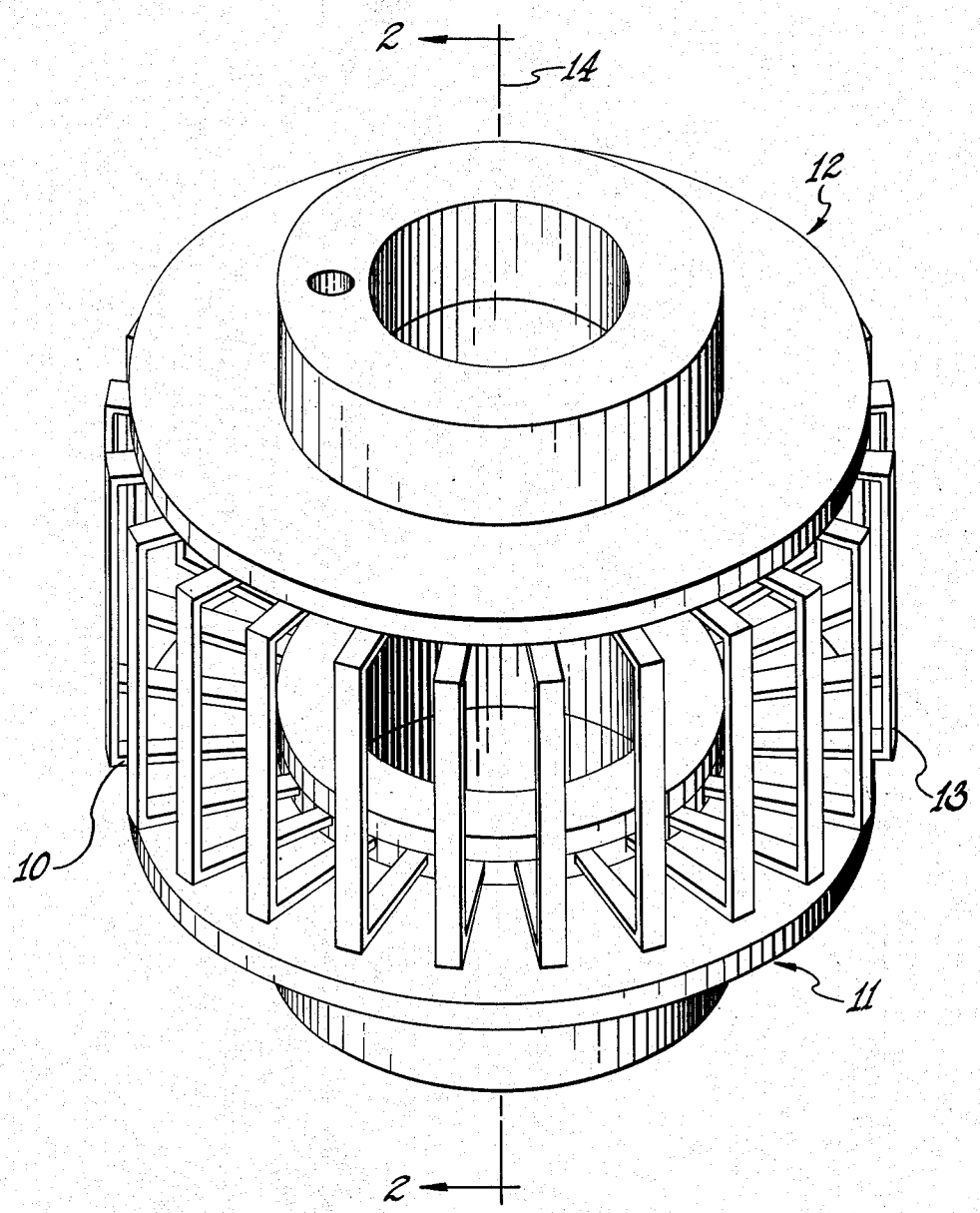

Fig. 1

INVENTOR.
WALTER H. KOHL
BY Marvin Moody
Atty.

RESNATRON FILAMENT BASKET

Original Filed Nov. 19, 1949 3 Sheets-Sheet 2

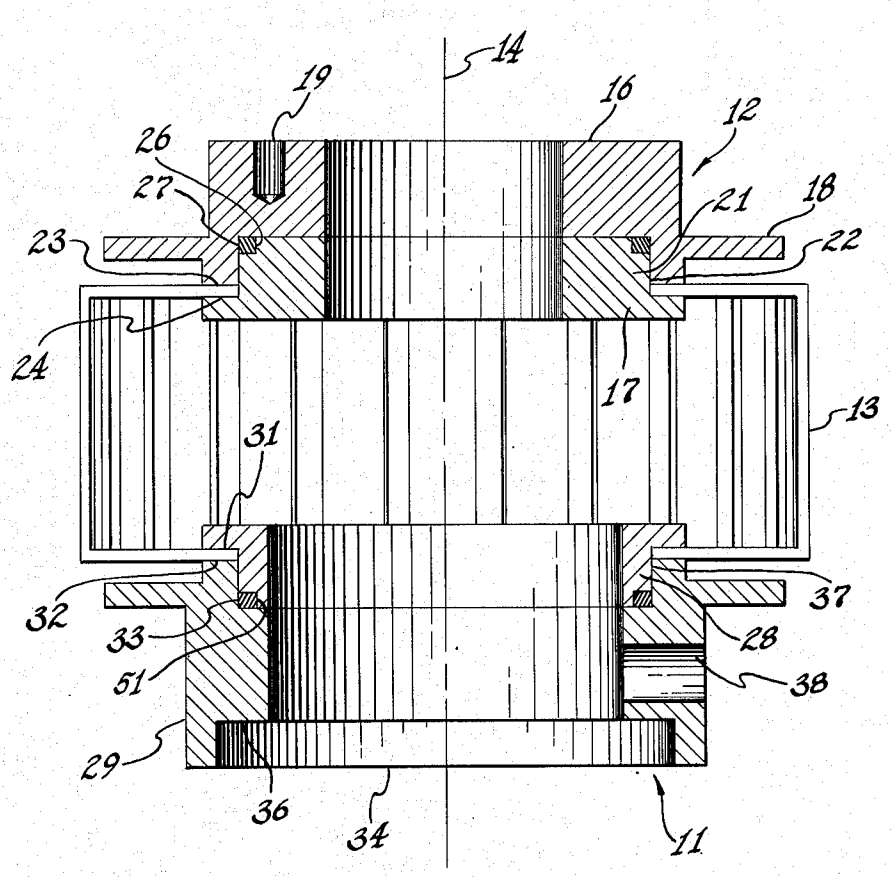

Fig 2

INVENTOR.
WALTER H. KOHL
BY Marvin Moody
Atty.

RESNATRON FILAMENT BASKET

Original Filed Nov. 19, 1949 3 Sheets-Sheet 3

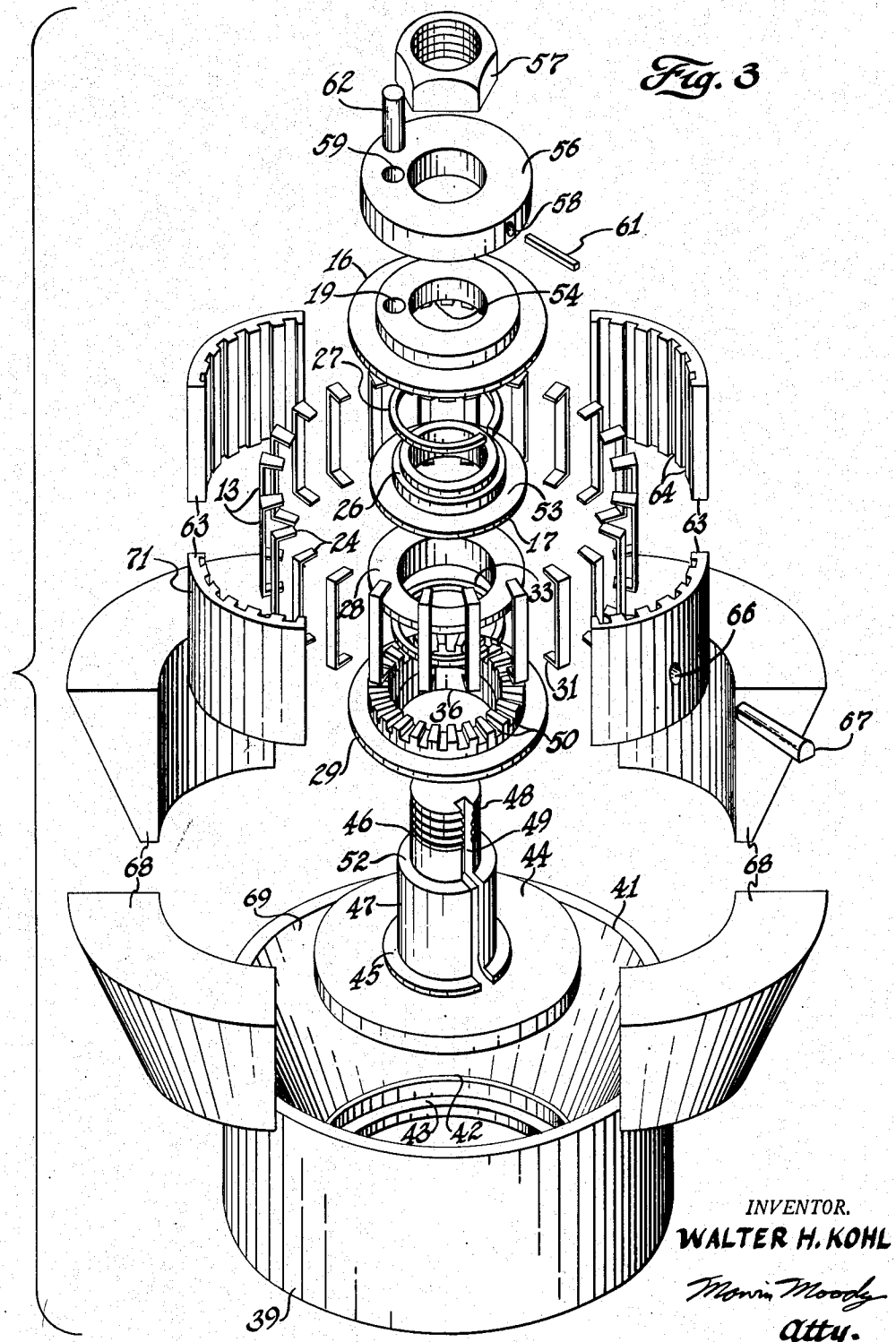

INVENTOR.
WALTER H. KOHL
Marvin Moody
Atty.

Patented Nov. 11, 1952 2,617,960

UNITED STATES PATENT OFFICE

2,617,960

RESNATRON FILAMENT BASKET

Walter H. Kohl, Cedar Rapids, Iowa, assignor to Collins Radio Company, Cedar Rapids, Iowa, a corporation of Iowa

Original application November 19, 1949, Serial No. 128,380. Divided and this application October 20, 1950, Serial No. 191,224

4 Claims. (Cl. 313—343)

1

This invention teaches a method of making resnatron filament baskets.

This is a divisional application of my application entitled Assembly for Resnatron Filament, Serial Number 128,380, filed on November 19, 1949.

During recent years there has been a general trend in the electronic art to use higher and higher frequencies. The resnatron tube has been devised as one device operable at high frequencies. It is essentially a beam tetrode in which a plurality of radial beams are eminated from an annular cathode. It is necessary to maintain accurate alignment of the respective elements of the tube and, in particular, to have the individual emitting sections of the cathode located accurately in angular and radial position. The resnatron cathode is called a filament basket. The basket comprises a plurality of staple-shaped filaments supported at both ends by rings. A voltage is applied across the rings during tube operation and the resultant current flow through the filaments heats them until thermionic emission of electrons occurs. To obtain symmetry of operation not only must great accuracy be maintained in spacing the filaments equidistant about the periphery of the rings, but also the distance of each filament to the major axis of the basket must be maintained substantially the same. Heretofore the filaments have been assembled by hand and the assembly was a difficult, tedious, and time-consuming task.

It is an object of this invention, therefore, to provide a jig which may be used for producing resnatron filament baskets.

A further object is to provide a jig which quickly and very accurately produces resnatron filament baskets.

Still a further object is to provide a jig which will reduce the cost of assembling a resnatron filament basket.

A feature of this invention is found in the provision for a resnatron filament jig comprising a base member which receives an upwardly extending member therein. A ring of the basket is placed over the upwardly extending member and a ring of solder is placed on the ring of the basket. The ends of the filaments are next placed into receiving slots formed in the ring and a holding ring is received in mating engagement over the first ring. The other ends are likewise held in a pair of rings and filament engaging and spacing members are placed against the outer edges of the filaments. A clamping means is threadedly received on the upwardly extending member and a plurality of wedges hold the filament engaging

2

members in place. The entire jig is heated in a furnace to melt the solder rings for bonding the holding rings of the filament together. The jig is removed from the furnace and cooled. Upon disassembly an accurately dimensioned resnatron filament basket is obtained.

Further objects, features, and advantages of this invention will become apparent from the description and claims when read in the light of the drawings, in which

Fig. 1 is a perspective view of a resnatron filament basket;

Fig. 2 is a sectional view taken along the line 2—2 in Fig. 1; and

Fig. 3 is an exploded perspective view of the jig of this invention with the respective parts of the filament basket interspersed in their respective assembly positions.

Referring to Fig. 1 an assembled resnatron filament basket is shown and comprises a plurality of filament staples 10 with their ends fastened to holding means 11 and 12. Each staple is spaced equidistant about the periphery of the holding means 11 and 12 and the distance to the center or active portions 13 of the staples from the major axis 14 of the completed assembly is very accurately maintained in a manner which will be later explained.

Fig. 2 is a sectional view taken along line 2—2 in Fig. 1 and shows the component parts of the resnatron basket.

The holding means 12 which clamps the upper ends of the filaments comprises a pair of rings 16 and 17 which fit together in mating engagement. Both rings are formed with an aligned axial opening. The upper ring 16 has an extending annular portion 18. A small vertical opening 19 is formed in the top of ring 16 at a position offset from the larger axial opening and extends only partially through the ring. The lower ring 17 is formed with an upwardly extending portion 21 which is received in mating engagement by the upper ring 16. The distance from the axis 14 to the outer surface 22 of the extending portion 21 is carefully machined to a predetermined dimension.

The upper ring 16 has a filament engaging portion 23 which is formed with a plurality of slots adapted to receive the ends 24 of the filament staples. The slots are spaced equidistant about the periphery of the engaging portion and when the filament ends 24 are clamped between the lower ring 17 and the engaging portion 23, the staples are spaced equidistant about the holding means 12.

An annular notch 26 is formed in the lower

ring 17 and is adapted to receive a ring of solder 27.

The ends 24 of the filaments are cut and then accurately finished to a predetermined length and are held in abutting engagement with the outer surface 22. Thus, the distance between the central portion 13 of the filament and the axis 14 is maintained constant for all the staples. This accuracy of construction maintains symmetry between the active portions 13 of the filaments and the surrounding grids and anode of the resnatron.

The bottom holding means 11 also comprises a pair of rings 28 and 29 which clamp the lower ends 31 of the filament staples. The lower ring 29 has a staple engaging portion 32 which is formed with a plurality of slots for receiving the ends 31 of the filaments therein. The ring 28 fits in mating engagement with ring 29 and a ring of solder 33 fits between the two in an annular groove formed in the ring 28. The bottom holding means 11 is formed with an opening 34 which is in axial alignment with the opening in the upper holding means 12 but which is substantially larger in diameter than the upper opening.

A shoulder 36 is formed in the ring 29 by counterboring the lower end of the opening 34.

The ends 31 of the staples 10 are maintained in abutting engagement with a shoulder 37 formed on the ring 28 and the length of the bottom ends 31 and the distance of the shoulder 37 from the axis 14 are maintained at predetermined dimensions.

A horizontal opening 38 is formed in the lower ring 29 for holding the lower holding means 11 in axial alignment with the upper holding means 12. The manner in which the opening 38 accomplishes the alignment will be explained hereafter.

It is seen from the above description that the assembly of the resnatron filament basket involves the joining together of a relatively large number of different parts which must be very accurately positioned. For example, oftentimes 24 filament staples are assembled in one basket and it is easily understood that to align such a number of staples axially and peripherally becomes quite a task.

The jig shown in Fig. 3 has been devised to facilitate the assembly of the parts of the basket which are shown interspersed among the parts of the jig.

A base member 39 of generally cylindrical shape is formed with a tapered opening which extends from a large diameter at the top 41 to a smaller diameter at the bottom 42. An annular shoulder 43 is formed adjacent the bottom 42 for supporting a disc 44 of the upright supporting member 46. The member 46 has an upward extending portion comprising the relatively thin shoulder 45, a longer middle section 47, and a top section 48 of smaller diameter than the middle section 47. A longitudinal slot 49 is formed in the outer surfaces of the upper section 48 and the middle section 47.

The ring 29 is received over the upward extending portion 46 and the shoulder 36 is engaged by the shoulder 45. The solder ring 33 is received in the notch 51 and the ring 28 is received in mating engagement with the ring 29. The lower ends 31 of the filament are placed in the slots 50 between the rings 28 and 29 with the ends in abutting engagement with the shoulder 37.

The ring 17 is received over the upright member 46 and engaged by the shoulder 52. The upper ends 24 of the filament staples are arranged about the surfaces 53 and the solder ring 27 is placed in the groove 26. The upper ring 16 is fitted over the lower ring 17 and the filament ends are received in the slots 54.

A clamping ring 56 is received over the upright member 46 and clamped against the ring 16 by a nut 57 which is threadably received by the upright member.

The clamping ring 56 is formed with a radial opening 58 and a vertical opening 59. A key 61 fits through the opening 58 and is received in the slot 49 for preventing rotary motion of the clamping ring. A second key 62 extends through the opening 59 and into the opening 19 in the ring 16. Thus rotary motion of the ring 16 is prevented.

Four arcuately-shaped filament engaging portions 63 are fitted about the active portions 13 of the filaments. Each filament engaging portion 63 is formed with equally spaced slots 64 for receiving the filaments therein. The edges of the slots are slightly tapered outwardly to allow the jig to be disassembled. One of the filament engaging portions is formed with a horizontal opening 66 for receiving a key 67 which extends through the opening 38 in the ring 29 and into the slot 49. This key prevents rotary motion of the ring 29 and thus the upper and lower holding means may be maintained in axial alignment.

The engaging portions 63 fit within the confines of the base member 39 and wedge members 68 are received between the inner tapered wall 69 of the base member and the outer surface 71 of the engaging portions.

The junctions between adjacent wedge portions 68 are placed so as to be out of radial alignment with the junctions between adjacent engaging portions 63.

When the jig has been completely assembled it is placed into a heating unit and raised to a temperature sufficient to melt the solder rings 27 and 33. The jig is then removed from the heating unit and allowed to cool. The wedges 68 are next removed and then the engaging portions 63. The nut 57 is unscrewed and the clamping ring 50 removed.

The filament basket may then be lifted from the upright member and the finished product is obtained.

It is thus seen that this invention provides a method of making a resnatron filament basket by the use of a novel jig.

Although the invention has been described with respect to preferred embodiments thereof it is not to be so limited because modifications and changes are within the full intended scope as defined by the appended claims.

I claim:

1. A resnatron filament basket comprising, a first ring formed with an upwardly extending portion, said extending portion being formed with a plurality of slots perpendicular to the major axis of said first ring, a plurality of staple-shaped filaments, the lower ends of said filaments received within the slot formed in said extending portion and said ends extending radially toward the major axis of said first annular ring, a second ring received in mating engagement with said first ring and clamping the lower ends of said filaments, an end engaging portion of said second ring engaging the lower inwardly pointing ends of said filaments to retain them in a fixed spatial relationship with the major axis of the first and second rings, first bonding means holding the first and second rings and the lower ends of the filaments in a fixed relationship, a third ring in

axial alignment with said first and second rings engaging the upper ends of said filaments, an end engaging portion of said third ring in abutting engagement with the upper ends of said filaments to retain them in a fixed spatial relationship with the major axis of said third ring, a fourth ring in mating engagement with said third ring and clamping the upper ends of said filaments, a downwardly extending portion of said fourth ring formed with a plurality of slots perpendicular to the major axis of said fourth ring for receiving the upper ends of said filaments therein, and second bonding means uniting the third and fourth rings and the upper ends of said filaments in a fixed relationship.

2. A resnatron filament basket comprising, a plurality of relatively high electrically resistant staple-shaped filaments having the end portions cut to very accurate lengths, a first annular clamping means receiving the upper end portions of said filaments and holding them in a fixed spatial relationship about the periphery of said first clamping means, an end engaging portion on said first clamping means in abutting engagement with the upper ends of said filaments and holding them equidistant from the major axis of said clamping means, a second annular clamping means receiving the lower end portions of said filaments and holding them in a fixed spatial relationship about the periphery of said second clamping means, and an end engaging portion

on said second clamping means in abutting engagement with the lower ends of said filaments and holding them equidistant from the major axis of said clamping means.

3. A resnatron filament basket comprising, a first ring formed with an upwardly extending portion, a second ring formed with a recess for receiving said upward extending portion therein, a third ring formed with a downwardly extending portion, a fourth ring formed with a recess for receiving said third ring therein, and a plurality of U-shaped staples with one of their ends fastened between the first and second rings and the other ends fastened between the third and fourth rings, respectively.

4. Apparatus according to claim 3 wherein the first and second rings are formed with an accurately dimensioned filament end engaging portion and the third and fourth rings are formed with an accurately dimensioned filament end engaging portion.

WALTER H. KOHL.

REFERENCES CITED

The following references are of record in the file of this patent:

UNITED STATES PATENTS

Number	Name	Date
2,451,987	Sloan	Oct. 19, 1948
2,452,786	O'Neill	Nov. 2, 1948