July 22, 1952 H. J. SPENCER 2,603,782

FASTENER APPLYING DEVICE

Filed May 7, 1949 3 Sheets-Sheet 1

Fig. 1.

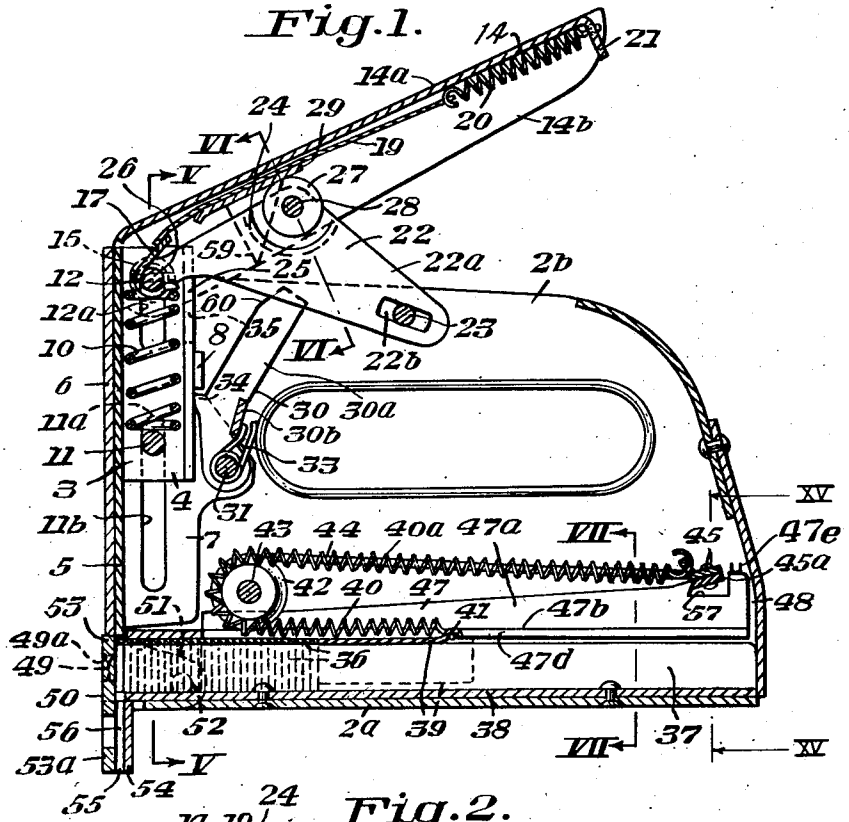


Fig. 2.

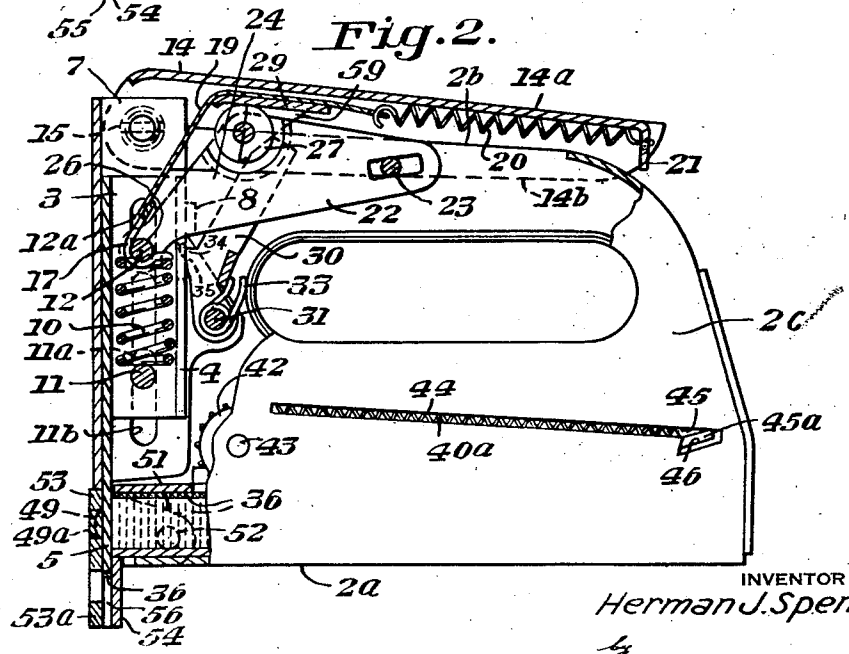


INVENTOR
Herman J. Spencer
by
Webb, Mackey & Burden.
Attys.

July 22, 1952 H. J. SPENCER 2,603,782

FASTENER APPLYING DEVICE

Filed May 7, 1949 3 Sheets-Sheet 2

Fig. 3.

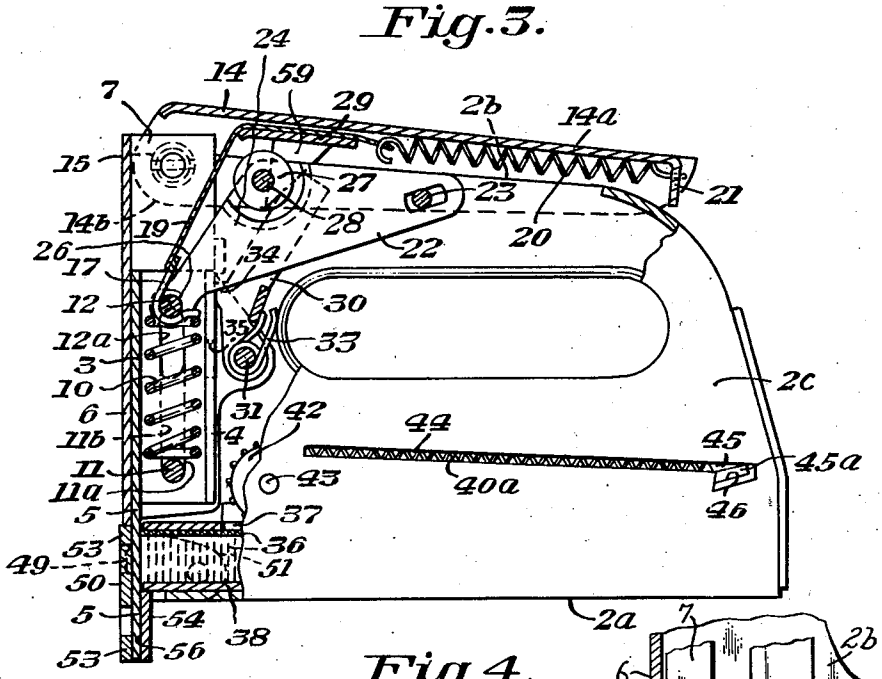


Fig. 4.

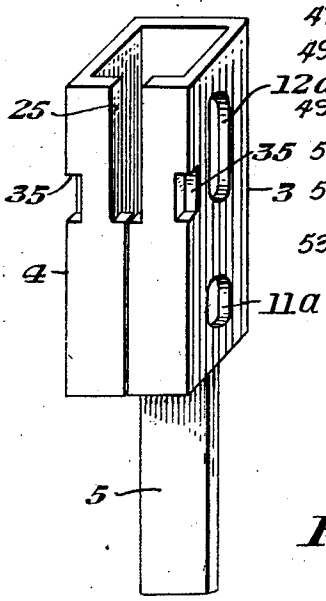


Fig. 13.

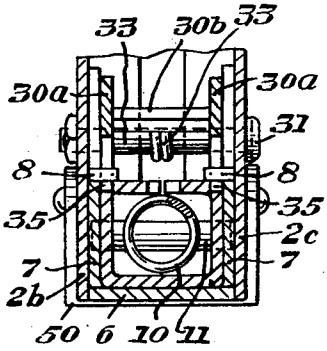


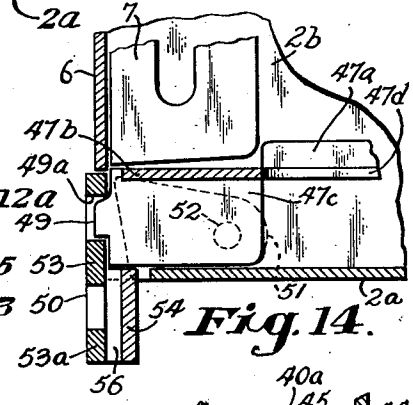


Fig. 14.

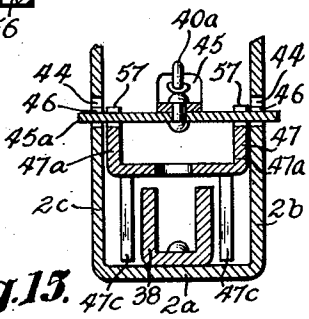


Fig. 15.

INVENTOR

Herman J. Spencer

by

Webb, Macky & Burden.

Attys.

July 22, 1952 H. J. SPENCER 2,603,782

FASTENER APPLYING DEVICE

Filed May 7, 1949 3 Sheets-Sheet 3

Fig.5.

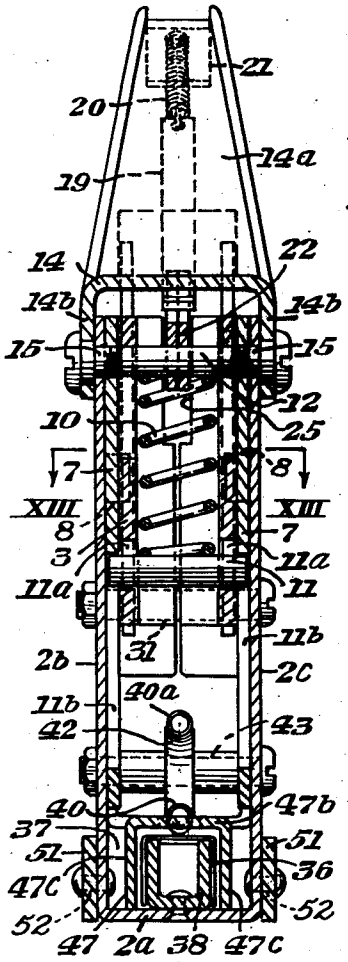


Fig.6.

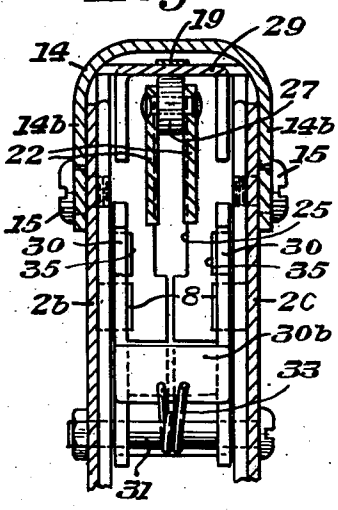


Fig.7.

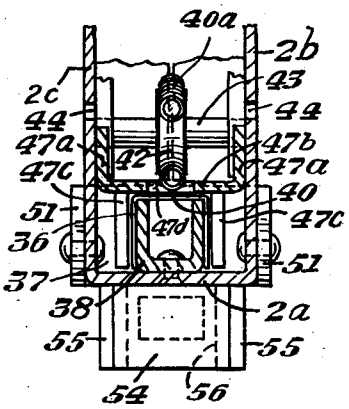


Fig.8.

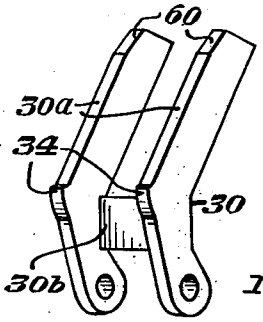


Fig.9.

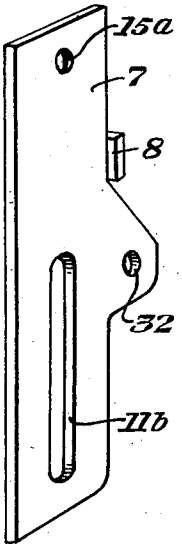


Fig.11.

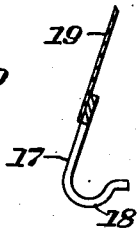


Fig.10.

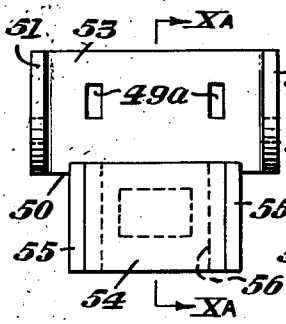


Fig.10A.

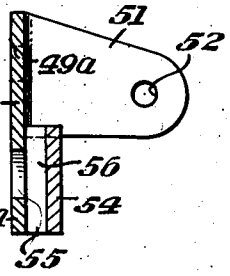


Fig.12.

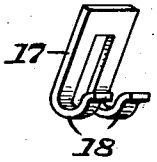


INVENTOR
Herman J. Spencer
by
Webb, Mackey & Burden,
Attys.

Patented July 22, 1952 2,603,782

# UNITED STATES PATENT OFFICE

2,603,782

## FASTENER APPLYING DEVICE

Herman J. Spencer, Ingomar, Pa.

Application May 7, 1949, Serial No. 92,000

7 Claims. (Cl. 1—49)

1

This invention relates to a fastener applying device such for example as a stapling or tacking device in which staples or other fasteners are fed to a staple driving throat and are then acted upon by a spring actuated staple driving plunger. The staple driving plunger is actuated by a spring which is compressed upon depression of a manually operated lever, the plunger being held in position as the manually operated lever is being depressed, and thereafter when the spring has been compressed the plunger is released so as to allow it to move downwardly and drive a staple under the action of the spring.

In the accompanying drawings which illustrate a present preferred embodiment of my invention:

Figure 1 is a vertical longitudinal section through the device with the staple driving plunger and manually operated lever in their starting positions;

Figure 2 is a view similar to Figure 1 showing the parts after the plunger actuating spring has been compressed and the latch holding the plunger has been released and the plunger has started its downward stroke;

Figure 3 is a view similar to Figure 1 after the staple driving plunger has completed its driving stroke;

Figure 4 is a perspective view of the staple driving plunger;

Figure 5 is a vertical transverse section taken on the line V—V of Figure 1;

Figure 6 is a vertical transverse section taken on the line VI—VI of Figure 1;

Figure 7 is a vertical transverse section taken on the line VII—VII of Figure 1;

Figure 8 is a perspective view of the pivoted latch which holds the plunger during compression of the plunger actuating spring;

Figure 9 is a perspective view of one of the two guide plates which form part of the plunger guide channel and which receive the ends of the lower spring rest;

Figure 10 is a front elevation and Figure 10A is a section taken on the line X*a*—X*a* of Figure 10 of the pivoted front jaw which forms the staple driving throat;

Figure 11 is a vertical section and Figure 12 is a perspective view of a clip adapted to be connected to the upper spring rest and to a spring for returning the parts of the device to their starting positions;

Figure 13 is a transverse horizontal section taken on the line XIII—XIII of Figure 5;

Figure 14 is an enlarged vertical section

2

through the pivoted jaw and hold-down member; and

Figure 15 is a vertical section taken on the line XV—XV of Figure 1.

Referring more particularly to the accompanying drawings, the stapling device comprises a sheet metal frame or casing which is generally U-shaped in cross-section and comprises a bottom portion 2*a*, a rear side portion 2*b*, and a front side portion 2*c*, see Figure 5. A staple driving plunger designated generally by the reference numeral 3, is reciprocably mounted adjacent the front end of the device. This plunger, see Figure 4, comprises an upper box-like portion 4 forming a spring housing and a lower portion constituting a plunger driving blade 5, the blade being integral with the spring housing 4. The plunger is mounted for reciprocation in a plunger guide channel, the guide channel being formed at its front end by a plate 6 extending between the two sides 2*b* and 2*c* of the frame 2, see Figure 13. The sides of the plunger guide channel are formed by two plates 7, one of which is shown in Figure 9. The plunger 3 is guided at its rear side by two lugs 8, one lug being formed on each of the guide plates 7.

A plunger actuating coil spring 10 is located in the spring housing 3. This spring rests at its lower end against a lower spring rest 11 in the form of a pin and at its upper end against an upper spring rest 12, also in the form of a pin. The ends of the upper spring rest 12 extend into slots 12*a*, one such slot being formed in each side of the spring housing 3, see Figure 4. The ends of the lower spring rest 11 extend through slots 11*a* formed in the spring housing 3, one such slot being formed in each side of the spring housing. The upper spring rest 12 is slidable in the slots 12*a* and the lower spring rest 11 is slidable in the slots 11*a*, the slots 11*a* being somewhat shorter than the slots 12*a*. The ends of the lower spring rest 11 extend beyond the slots 11*a* in the spring housing and into the slots 11*b* formed in the plunger guide plates 7.

A manually operated lever 14 is pivoted at its left-hand end as viewed in Figures 1, 2 and 3 on pins 15, each of the pins extending through an opening formed in a downwardly extending side flange 14*b* of the lever 14 and through an opening in the frame 2 into a threaded hole 15*a* formed in each of the plates 7, see Figures 5 and 9. A clip 17, shown in Figures 11 and 12, has a hook portion 18 which engages the upper spring rest 12. The other end of the clip 17 is connected by a flexible strip 19 to a spring 20 located beneath

the surface 14*a* of the lever and connected to the lever 14 by a down turned tab 21. The function of the spring 20 is to return the plunger to its starting position after a staple has been driven.

An arm 22 having two transversely spaced sides 22*a* is located below the manually actuated lever 14 and is pivoted at its right hand end as viewed in Figure 1 on a pin 23 secured to the frame 2. The sides 22*a* have slots 22*b* so that the arm 22 not only pivots on the pin 23 but is capable of some lengthwise movement relative to the pin. The arm sides 22*a* are bent toward each other at 24, see Figure 1, to decrease the space between them so that they can be received in the slot 25 in the spring housing 3. The forward ends of the arm sides 22*a* are bent downwardly at an angle with respect to their rear ends. The forward ends are provided with holes 26 which receive the upper spring rest 12. A roller 27 is mounted on a pin 28 supported by the arm 22 at a point intermediate the ends of the arm. The roller 27 contacts a plate 29 which is secured to the sides 14*b* of the lever 14 but is spaced from the top 14*a* so as to provide a space for the strip 19. The contact between the roller 27 and the plate 29 of lever 14 is shiftable and the arrangement is such that this contact point moves closer to the pivot point 15 of the lever 14 as the lever is depressed, thus increasing the mechanical advantage or leverage of the lever 14 and arm 22 on the spring 10.

A latch 30, see Figure 8, composed of two arms 30*a* and a cross piece 30*b*, is pivoted on a pin 31 fitting in holes 32 provided in the plates 7. A spring 33 urges the latch toward the plunger so as to cause the lugs 34 on the latch to enter notches 35 provided in the spring housing 3.

A strip of staples 36 is contained in a magazine 37. A U-shaped staple guide bar 38 is located in the magazine 37, the staples straddling the guide bar as shown in Figure 7. A staple follower 39, see Figure 1, is located in the magazine at the rear end of the strip of staples. A spring 40 is connected at one end 41 to the staple follower 39 and passes around a sheave 42 mounted on a pin 43 secured to the frame 2. The upper run 40*a* of the spring at its right-hand end is provided with a clip 45 which is connected to a bar 45*a*. The bar 45*a* is wider than the magazine 37 and has its ends extending outside of the frame sides 2*b* and 2*c* through a slot 44 formed in each of the frame sides. A notch 46 is formed in the frame at the rear end of each of the slots 44 for receiving the bar 45*a* and preventing it from moving forward in the slots 44 unless the bar 45*a* is lifted from the notch 46. A hold-down member 47 is provided for holding the staples in line on the guide bar 38 and to act as the side guide plates of a staple driving channel. Hold-down member 47 has vertical flanges 47*a* and a horizontal flange 47*b* which extends over the staples and holds them in line on the guide bar 38. The front end of hold-down member 47 is provided with downwardly extending parallel bars 47*c* on each side of and spaced from the guide bar 38 and those bars 47*c* extend beyond the front end of the guide bar 38. The hold-down member 47 is slidable in the staple magazine so that it can move forwardly or rearwardly a limited distance. A U-shaped member 47*e*, shown in Figure 1, is secured to the frame 2 above the hold-down member 47 and acts to limit upward movement of the hold-down member at its rear end. In Figure 1 the hold-down member is shown in its forward position and at its rear end a space 48 is provided between the hold-down member and the frame of the machine. Each of the bars 47*c* at its front end is provided with a lug 49 which fits into a notch 49*a* in a front jaw 50. This front jaw 50 has two side portions 51 which are pivotally mounted on pins 52 carried by the frame 2. The front jaw 50 is shown more particularly in Figures 10, 10A and 14. It comprises a front plate 53 having the notches 49*a* and extending between the side portions 51. The front portion 53 has a downwardly extending portion 53*a* which is of less width than the portion 53 and which forms the front face of the staple driving channel in which the plunger blade 5 operates. The rear face of the extended part of the staple driving channel is formed by a plate 54 which extends between bars 55 secured to the plate 53*a*. The staple driving throat in which the blade 5 operates is designated by the reference numeral 56. The horizontal flange 47*b* of hold-down member 47 is provided at its center with a slot 47*d* which is open at the rear end of flange 47*b* and extends forwardly to a point adjacent the bars 47*c*. Each of the vertical flanges 47*a* is provided at its rear end with a notch 57, see Figures 1 and 15, which is substantially in line with the notch 46 in the frame 2.



When the bar 45*a* of the spring clip 45 is engaged in the notches 46 of the frame and the notches 57 of the hold-down member 47, the spring 40 is under tension, the follower 39 is urged forwardly, and the lugs 49 on the hold-down member 47 are urged into engagement with the notches 49*a* in the jaw 50, thereby locking the jaw in its operative position. When it is desired to refill the magazine 37 with staples, the spring clip bar 45*a* is disengaged from the notches 57 and 46 and allowed to move forward in the slots 44, thereby relieving tension in the spring 40. As shown in Figures 1, 2 and 14, lugs 49 are beveled at their upper edges to a degree that will lock jaw 50 in place when lugs 49 are urged forwardly by spring 40 but will allow jaw 50 to rotate counterclockwise about pivot 52 to its open position when lugs 49 are not urged forwardly by spring 40, thereby opening the front end of the magazine 37. A strip of staples is then inserted through the front end of the magazine 37, this insertion being accomplished without having to overcome spring tension because the bar 45*a* of clip 45 has been disengaged from the notches 57 and 46. After the strip of staples has been loaded into the magazine, the spring clip bar 45*a* is again engaged in the notches 57 and 46, which puts pressure on the staple follower 39, thereby feeding a staple into the throat 56 in position to be acted upon by plunger blade 5 and also urging the hold-down member 47 forwardly so that the lugs 49 on the hold-down member engage the notches 49*a* of the jaw 50 and lock the jaw in operative position.

The operation of the device is as follows:

*Stage 1—Free travel.*—Assuming that the parts are in the starting positions shown in Figure 1, when the lever 14 is depressed it rotates clockwise about the pivot 15. This causes counterclockwise movement of the arm 22 about the pivot 23 because of the contact between the roller 27 and the plate 29 which is secured to the lever. Since the arm 22 is pivoted to the upper spring rest 12, the upper spring rest moves downwardly. During this first stage the notches 35 of the plunger 3 are above the lugs 34 on the latch 30 so that the plunger is free to move as a unit. This stage is called the "free travel"

stage. During this stage the spring 10 is not compressed substantially but the plunger unit as a whole moves downwardly until the lugs 34 of the latch 30 engage the notches 35 in the plunger.

*Stage 2—Compression of spring.*—As the lever 14 is depressed further, the latch 30 holds the plunger 3 from downward movement and the spring 10 is compressed. During this compression of the spring the upper spring rest 12 moves downwardly in the slots 12*a* in the spring housing 4 and during such movement the lower spring rest 11 remains at the bottom of its slot 11*a* in the spring housing 4.

*Stage 3—Expansion of spring.*—Figure 2 shows the parts shortly after the latch 30 has been released from the notches in the spring housing 4. This release is accomplished by lugs 59 secured to the plate 29 carried by the lever 14 contacting the beveled face 60 of the latch 30 and rotating the latch clockwise about its pivot 31 against the tension of the spring 33 so as to release the lugs 34 on the latch from the notches 35 in the spring housing 4. Upon release of the plunger by the latch, the spring 10 expands and since the upper spring rest is held in fixed position by the arm 22, the plunger 3 moves downwardly as a unit under the driving force of the spring until the upper spring rest 12 is at the top of its slot 12*a* in the spring housing and the blade 5 of the plunger 3 has reached approximately but not quite the position shown in Figure 3.

*Stage 4—Momentum downward movement of plunger.*—After the spring 10 has expanded to its full extent, and the upper spring rest 12 is at the top of its slot 12*a* and the lower spring rest 11 is still at the bottom of its slot 11*a*, there is a further downward movement of the plunger 1 due to the momentum or inertia of the plunger. This momentum downward movement continues until the lower spring rest 11 reaches the bottom of the slots 11*b* in the guide plates 7. During this portion of the momentum downward movement, the roller 27 moves downwardly away from the plate 29, as shown in Figure 3.

*Stage 5—Further downward momentum movement of the plunger.*—When the lower spring rest 11 has reached the bottom of the slot 11*b* in the plate 7, further downward momentum movement of the plunger causes compression of the spring 10, thereby cushioning the plunger at the end of its driving stroke. During this cushioning action the lower spring rest 11 remains at the bottom of the slots 11*b* in the plate 7 but moves upwardly in the slots 11*a* in the spring housing 4, thereby compressing the spring 10. Thus the plunger actuating spring 10 not only performs the usual function of driving the plunger downwardly during the staple driving portion of the operation, but thereafter acts to cushion the plunger at the end of its driving stroke. This cushioning action is made possible by the provision in the spring housing 4 of the slots 11*a* which allow further downward movement of the spring housing relative to the lower spring rest 11 after the downward movement of that spring rest has been stopped by contact with the bottom of the slot 11*b* in the plates 7.

In my fastener applying device the parts are so arranged that the contact between the roller 27 and the plate 29 on the lever 14 moves closer to the pivot point 15 of the lever as the lever is depressed. This increases the mechanical advantage during compression of the spring 10. It will be seen that in the starting position shown in Figure 1 the roller 27 is located above the line connecting the pivot 15 and the pivot 23 of arm 22. Thus when the lever 14 is depressed, the roller 27 not only is lowered but moves closer to the pivot 15, as can be readily seen by reference to Figures 1 and 3. Thus the mechanical advantage or leverage is increased during compression of the spring while still providing considerable free travel of the plunger prior to compression of the spring. This provision of free travel of the plunger means that the staple driving plunger travels a greater total distance than if no free travel were provided and that accordingly longer staples can be employed. Of course, the distance that a staple driving plunger travels upon depressing the actuating lever a given amount can be increased in a plier type of stapling device by moving the pivot point of the two arms further away from the plunger but this reduces the leverage on the plunger. In my device the roller 27 moves closer to the pivot 15 when the lever 14 is depressed, thus resulting in a relatively small leverage action during the free travel portion of the plunger stroke when large leverage is not needed but a relatively large movement of the plunger, and thereafter during compression of the spring the mechanical advantage is increased because of movement of the roller 27 toward the pivot point 15.



The invention is not limited to the preferred embodiment but may be otherwise embodied or practiced within the scope of the following claims.

I claim:

1. In a fastener applying device having a frame, a staple driving plunger reciprocably mounted in a plunger guide channel, means for feeding fasteners into position to be driven by said plunger, and a manually operated lever pivoted on the frame of the device, the improvement in means for transmitting motion from the manually operated lever to the plunger which comprises an arm located below said manually operated lever, pivotally connected adjacent one end to said plunger, slidably connected adjacent its opposite end to said frame and having intermediate its ends a contact with said manually operated lever, said contact point moving around the pivoted connection of said arm on said plunger toward the pivot point of said operating lever, thereby increasing the power of said lever as it is depressed.

2. In a fastener applying device having a frame, a plunger reciprocably mounted in the frame of the device, means for feeding fasteners into position to be driven by said plunger, a plunger actuating spring, means for holding said plunger actuating spring in alignment with said plunger, an upper spring rest and a lower spring rest, each of said spring rests being movable relative to said plunger, a manually operated lever pivoted to the frame of the device, an arm located below said manually operated lever, said arm being pivotally connected adjacent one end to said upper spring rest and adjacent its opposite end slidably connected to said frame, said arm having intermediate its ends a contact with said manually operated lever, said contact point moving in an arc around the pivoted connection of said arm on said upper spring rest toward the pivot point of said operating lever, thereby increasing the power of said lever as it is depressed.

3. In a fastener applying device having a frame, a plunger reciprocably mounted in the frame of the device, means for feeding fasteners into position to be driven by said plunger, a plunger actuating spring, means for holding said plunger actuating spring in alignment with said plunger, an upper spring rest and a lower spring rest, each of said spring rests being movable relative to said plunger, a manually operated lever pivoted to the frame of the device, an arm located below said manually operated lever, said arm being pivotally connected adjacent one end to said upper spring rest and adjacent its opposite end slidably connected to said frame, said arm having intermediate its ends a contact with said manually operated lever, said contact point moving toward the pivot point of said manually operated lever around the pivoted connection of said arm and said upper spring rest, thereby increasing the leverage of said manually operated lever, and resilient means connecting said manually operated lever and said top spring rest for returning the plunger to its starting position.

4. A fastener applying device comprising a frame, a plunger having a spring housing, a plunger housing in which the plunger reciprocates, a compression spring in said spring housing, an upper spring rest and a lower spring rest, said spring housing having upper slots for receiving the ends of said upper spring rest and lower slots for receiving the ends of said lower spring rests, said upper and lower spring rests being movable in said slots, said plunger housing having slots into which the ends of said lower spring rests extend, and which limit downward movement of said lower spring rest toward the end of the driving stroke, a manually operated lever pivoted to the frame, means operatively connecting said lever and said upper spring rest for compressing said spring upon depression of said lever, a latch for holding the plunger during compression of the spring, means operative upon depressing said lever for releasing the latch from the plunger after the spring has been compressed, and means for feeding fasteners into position to be driven by said plunger.

5. A fastener applying device comprising a frame, a plunger having a spring housing, a plunger housing in which the plunger reciprocates, a compression spring in said spring housing, an upper spring rest and a lower spring rest, said spring housing having upper slots for receiving the ends of said upper spring rest and lower slots for receiving the ends of said lower spring rests, said upper and lower spring rests being movable in said slots, said plunger housing having slots into which the ends of said lower spring rests extend, and which limit downward movement of said lower spring rest toward the end of the driving stroke, a manually operated lever pivoted to the frame, an arm located below said lever, said arm being pivotally connected adjacent one end to said upper spring rest and adjacent its opposite end slidably connected to said frame, said arm having intermediate its ends a contact with said lever, whereby said spring is compressed upon depression of said lever, a latch for holding the plunger during compression of the spring, means operative upon depressing said lever for releasing the latch from the plunger after the spring has been compressed, and means for feeding fasteners into position to be driven by said plunger.



6. A fastener applying device comprising a frame, a fastener applying plunger unit reciprocably mounted in said frame, said plunger unit including a plunger and an upper and a lower spring rest and a plunger actuating spring between said rests, said upper spring rest being movable in relation to said plunger, said spring acting to urge said upper rest away from the lower rest to the limit of its movement in relation to said plunger, means for feeding fasteners into position to be driven by said plunger, an operating lever pivoted on the frame, means connecting said operating lever with said upper spring rest for moving the plunger unit downward to shear a fastener from a supply of fasteners carried in a suitable guide below said plunger, thereby partially driving one of said fasteners, a latch for arresting the downward movement of said plunger after a fastener has been partially driven, continued movement of said operating lever with its connecting means to said upper spring rest acting to lower said rest in relation to said plunger, thereby compressing said driving spring, means operative upon depressing said lever for releasing said latch from the plunger after the spring has been compressed, thereby permitting said spring to expand and drive said plunger downward to complete the securing of said fastener.

7. A fastener applying device comprising a frame, a fastener applying plunger unit reciprocably mounted in said frame, said plunger unit including a plunger and an upper and a lower spring rest and a plunger actuating spring between said rests, both of said rests having limited movement in relation to said plunger, said spring acting to urge said rests apart to the limit of their movement in relation to said plunger, a latch for arresting downward movement of said plunger, an operating lever pivoted on the frame, means connecting said lever with said upper spring rest and acting to lower said spring rest on depression of said lever, thereby compressing said driving spring against the lower movable spring rest held in said plunger, means operative upon depressing said lever for releasing said latch from the plunger after the spring has been substantially compressed, thereby permitting expansion of said spring to actuate the plunger downward to drive a fastener until said upper spring rest reaches the limit of its movement relative to said plunger, said plunger unit and said means connecting said upper spring rest with said operating lever continuing their downward movement under their own momentum to complete the driving of a fastener.

HERMAN J. SPENCER.

## REFERENCES CITED

The following references are of record in the file of this patent:

UNITED STATES PATENTS


| Number | Name | Date |
|---|---|---|
| 1,994,567 | Cavanagh | Mar. 19, 1935 |
| 2,107,522 | Cavanagh | Feb. 8, 1938 |
| 2,109,203 | Spencer | Feb. 22, 1938 |
| 2,137,642 | Cavanagh | Nov. 22, 1938 |
| 2,161,449 | Blumenbaum | June 6, 1939 |
| 2,310,529 | Krantz | Feb. 9, 1943 |
| 2,381,192 | Vancura | Aug. 7, 1945 |