April 15, 1952 W. L. CLIFTON 2,593,270

ARTICLE OF FURNITURE

Filed June 12, 1950 4 Sheets-Sheet 1

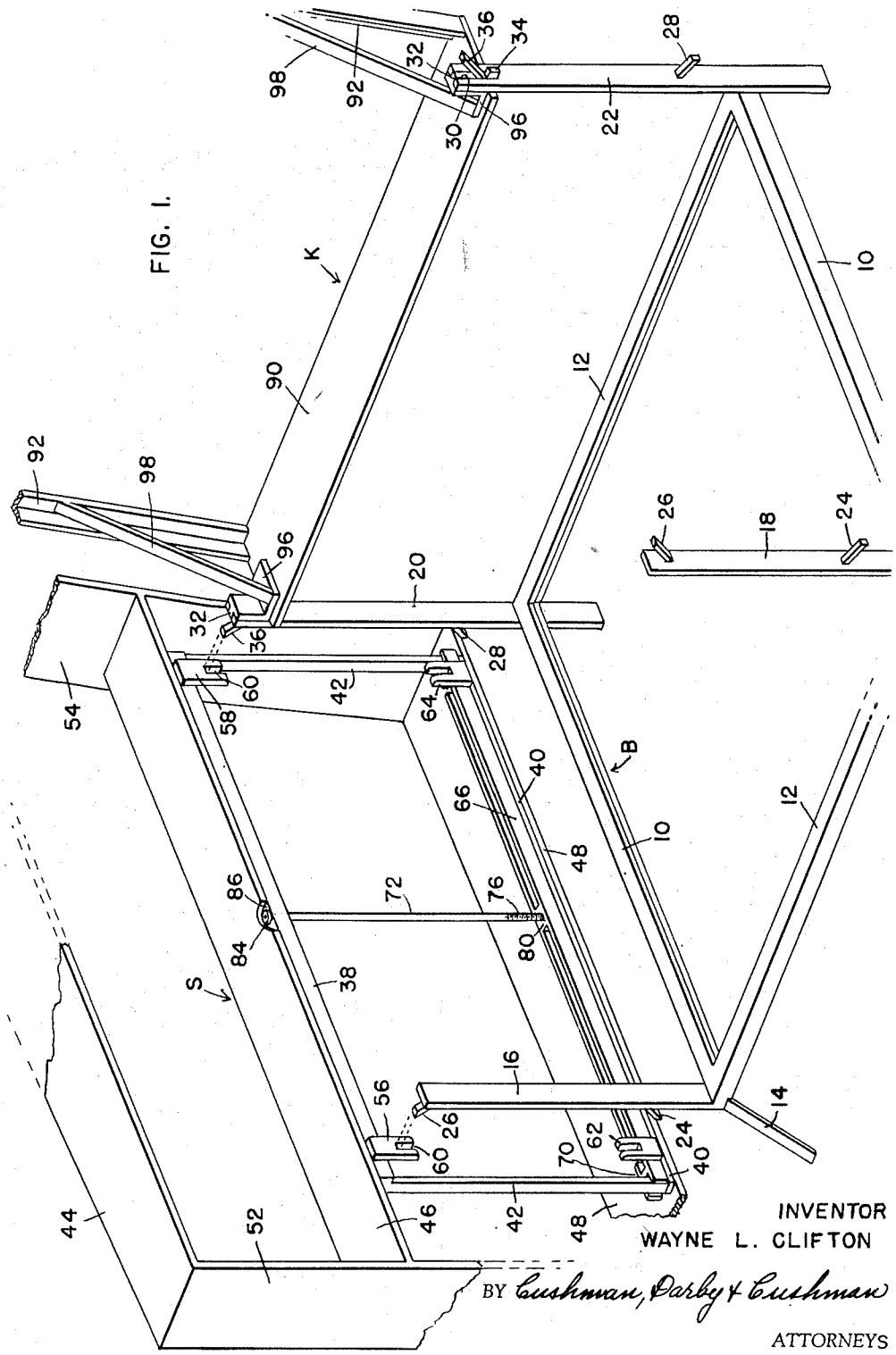

INVENTOR
WAYNE L. CLIFTON

BY Cushman, Darby & Cushman

ATTORNEYS

April 15, 1952 W. L. CLIFTON 2,593,270

ARTICLE OF FURNITURE

Filed June 12, 1950 4 Sheets-Sheet 2

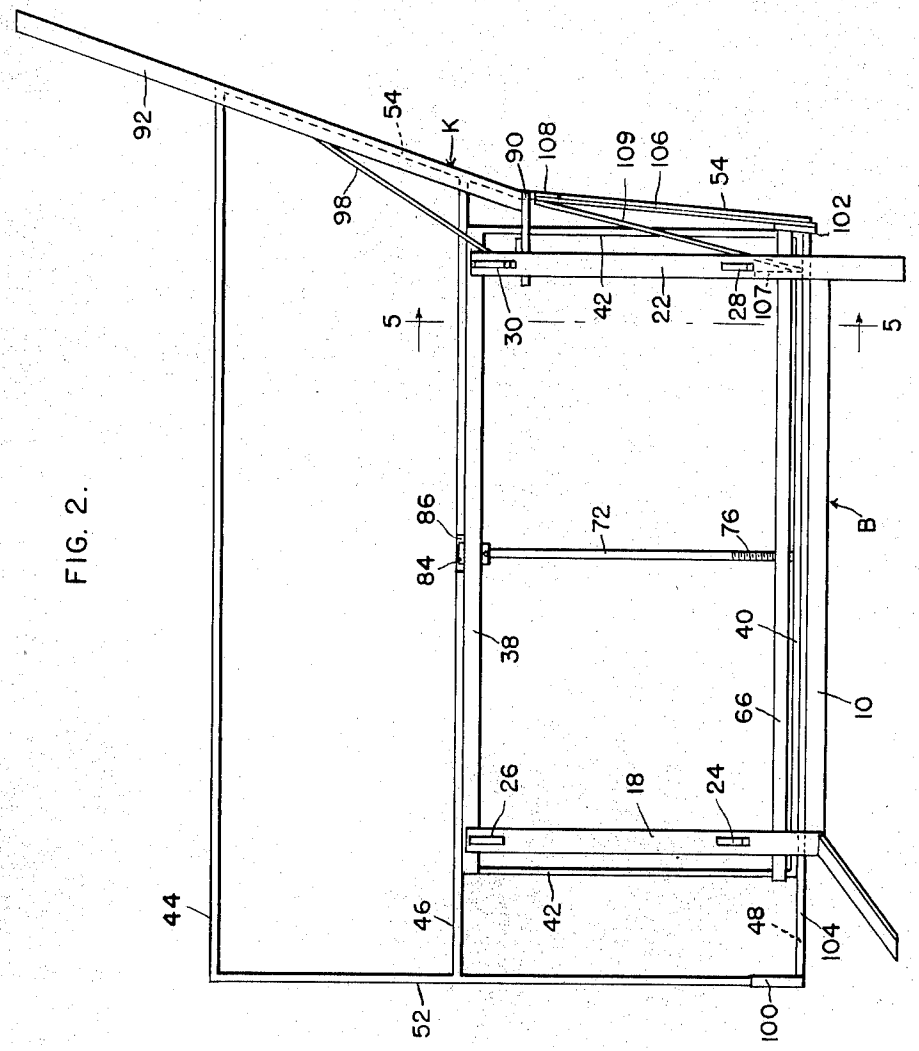

FIG. 2.

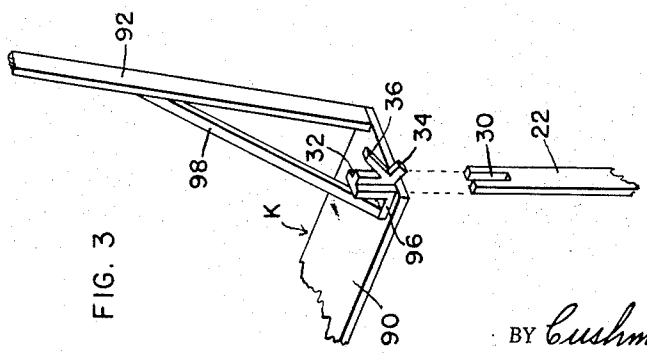

FIG. 3

INVENTOR
WAYNE L. CLIFTON

BY Cushman, Darby & Cushman

ATTORNEYS

April 15, 1952 W. L. CLIFTON 2,593,270

ARTICLE OF FURNITURE

Filed June 12, 1950 4 Sheets-Sheet 3

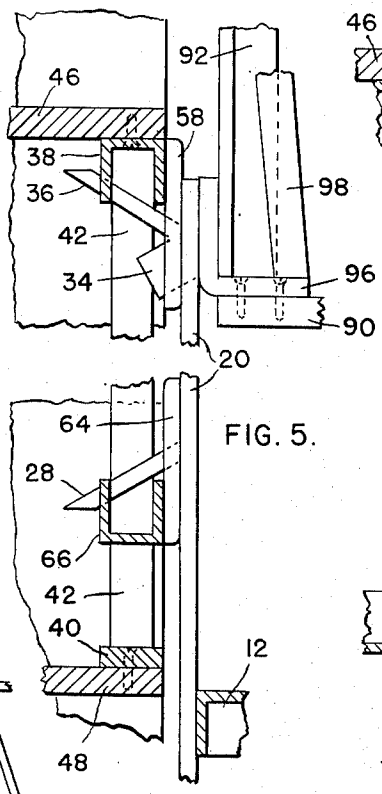

FIG. 5.

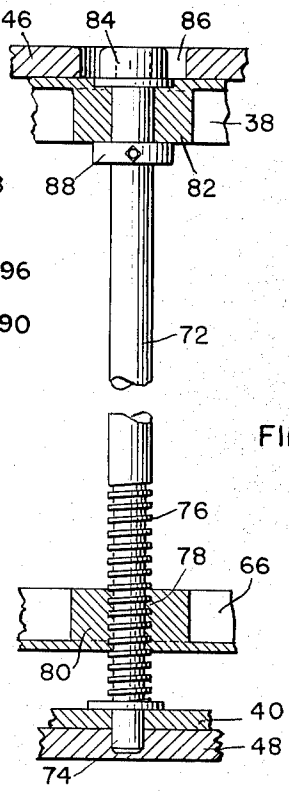

FIG. 6.

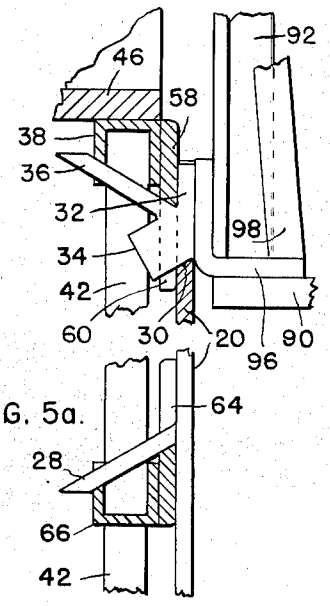

FIG. 5a.

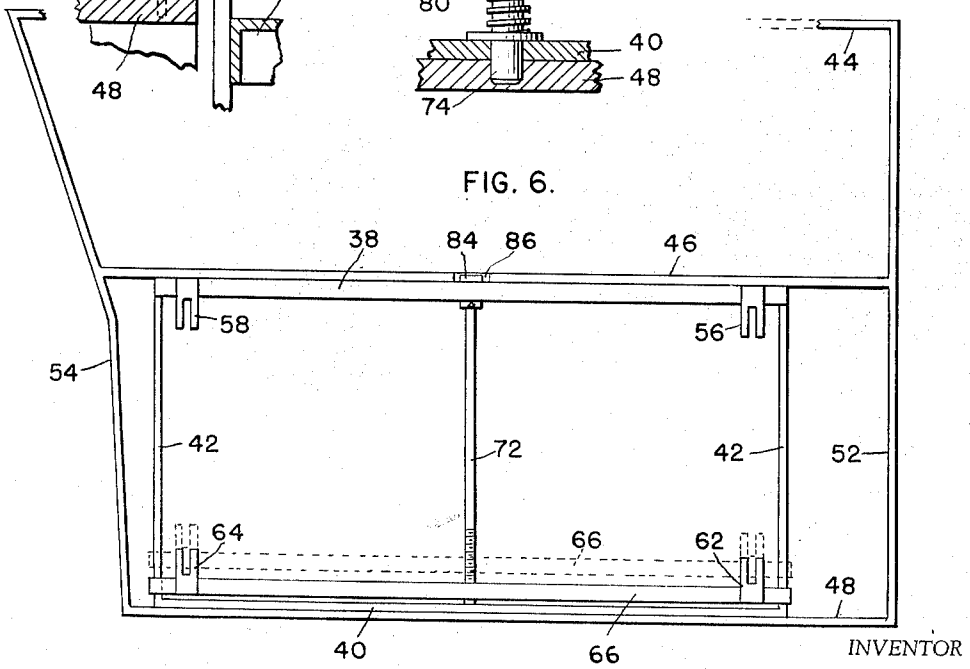

FIG. 4.

INVENTOR
WAYNE L. CLIFTON

BY Cushman, Darby & Cushman
ATTORNEYS

ARTICLE OF FURNITURE

Filed June 12, 1950 4 Sheets-Sheet 4

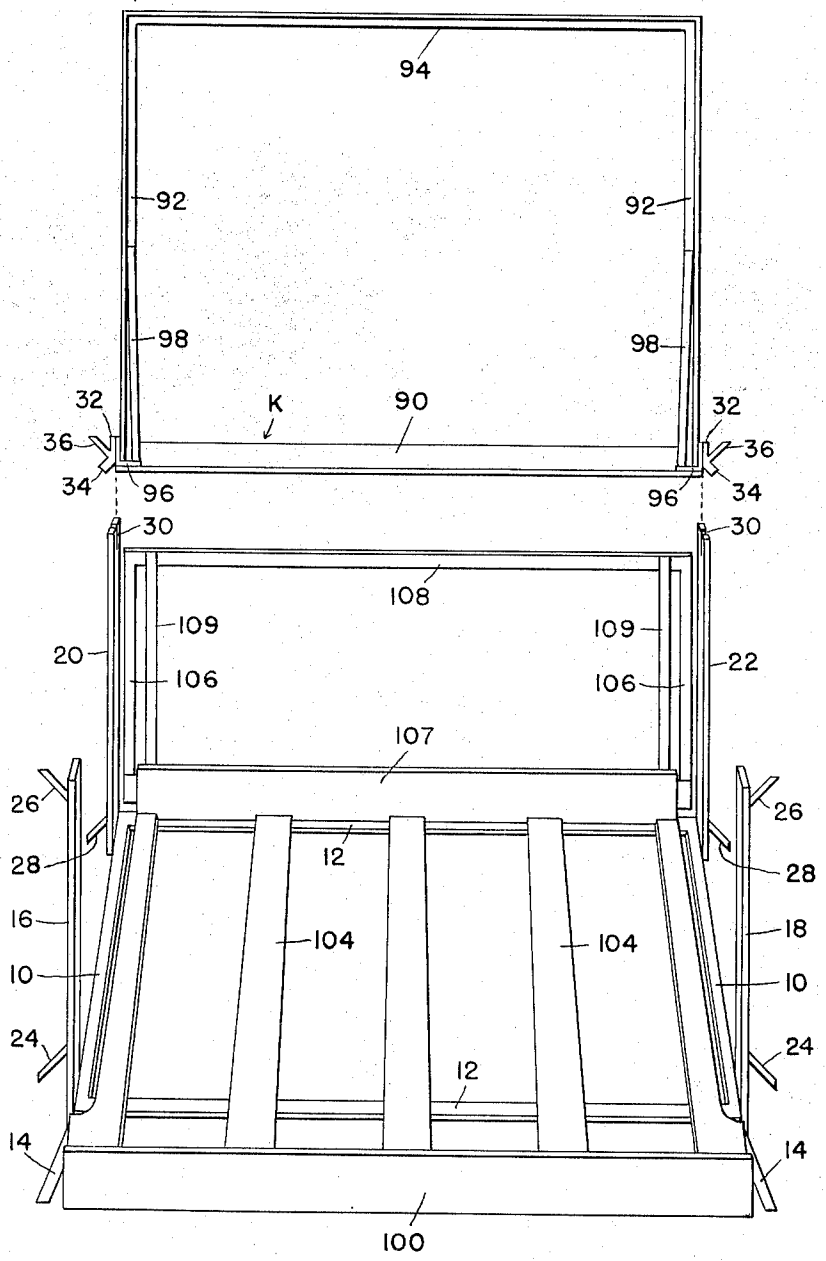

FIG. 7.

INVENTOR
WAYNE L. CLIFTON

BY Cushman, Darby & Cushman
ATTORNEYS

Patented Apr. 15, 1952 2,593,270

UNITED STATES PATENT OFFICE

2,593,270

ARTICLE OF FURNITURE

Wayne L. Clifton, Sumter, S. C., assignor of forty-five per cent to William Harry Pate, Jr., and ten per cent to J. William Cox, both of Sumter, S. C.

Application June 12, 1950, Serial No. 167,625

9 Claims. (Cl. 155—196)

1

The present invention relates to furniture, such as upholstered chairs, sofas, and the like. A principal object of the invention is to provide such an article of furniture having separate base, side and back members which can be readily assembled into a complete article, such as a chair or sofa. Ancillary to the objective just mentioned, it is a purpose of the invention to provide such an article of furniture, having the sides and back connected to the base in such manner that they may be readily detached therefrom, whenever it is desired to break-down the article of furniture. Of course, the provision for detaching and removing parts of the article of furniture permits dismantling and storing of the furniture in confined space, as well as transportation of the furniture without injury and while occupying a minimum amount of space.

Furniture embodying the present invention may be manufactured in parts and initially shipped in this condition and the parts may thereafter be assembled at the retail store or even in the home of the purchaser.

The elements of furniture are equipped with means to connect same to one another, such means being of simple character whereby various articles of furniture may be erected or broken down by unskilled personnel, with great rapidity and without the need for any special tools other than a simple wrench.

In the drawings, I have merely shown the framework of an article of furniture, such as a chair, but it will be understood that the actual chair will be covered with suitable upholstery, and in a manner which is well known in the art. In said drawings:

Figure 1 is a perspective view of the chair, looking inwardly of the base member from one front corner toward an opposite rear corner, showing the back member attached to the base and showing one opposite side member about to be secured on the base member.

Figure 2 is a side elevational view of the chair assembly of Figure 1, showing the opposite side member of the chair in place, or mounted on the base member.

Figure 3 is a detail view showing one end of the back member positioned just above the upper end of one of the rear posts of the base member, just before the back member is mounted on the post.

Figure 4 is a partial elevational view of one of the side members of the chair, looking outwardly.

Figure 5 is a partial transverse vertical sectional view through one of the side members taken along the line 5—5 of Figure 2, showing the manner in which the side member is attached to one of the rear posts of the base member and the manner in which this side member locks the back member in place on said post.

Figure 5*a* is a view similar to Figure 5 except that the section is taken through the securing clasps rather than forwardly thereof.

2

Figure 6 is a partial longitudinal vertical sectional view through one of the side members of the chair, showing the operating mechanism for moving the lower horizontal bar carrying the keepers or clasps upwardly to engage the lugs on the posts of the base member, in order to lock the side member in place on said posts.

Figure 7 is a perspective view from the front, showing the base member with its separate seat platform in place, the side members removed, and with the back member about to be secured on the upper ends of the rearward posts of the base member.

Referring to Figure 1, the base member B is a suitably formed framework, preferably of metal, and made up of suitable metal plates or rods secured to one another as by welding. The base member has side plates 10 and front and rear plates 12, there being outwardly directed legs 14 at the forward corners to support the frame on the floor. Extending upwardly from the front corners are front posts 16 and 18, secured to the frame in any suitable manner as by welding, and at the rearward corners there are similar posts 20 and 22, the lower ends of these posts constituting vertical legs to support the frame on the floor. The legs 18 and 22 are, respectively, identical in construction with the legs 16 and 20.

The post 18 is provided with an outwardly and downwardly directed clasp lug 24, adjacent to the lower end of said post, and with an upwardly and outwardly directed clasp lug 26 adjacent to the upper end of the post. The post 22 is equipped with a similar lower lug 28, and at its upper end this post is provided with a slot 30 extending transversely therethrough and downwardly into the post from its upper end for a short distance, as shown in Figure 3. This slot is adapted to receive a clasp lug 32 carried by the back member K. Referring again to Figure 3, the lug 32 has a lower fork 34, which serves to support the back member in the slot 30, and an upwardly and outwardly extending fork 36 which serves the same purpose as the lug 26 on the post 18, i. e., to support the side member on the post in a manner hereinafter described. Thus, lug 32 becomes a part of the base when the back is in place.

Referring again to Figure 1, one side member is shown at S. It comprises a wooden form for the upholstery suitably secured to a substantially rigid metal frame consisting of upper and lower bars 38 and 40, respectively, and vertical end bars 42. The upholstery frame may be of any suitable construction, and is attached to and carries the metal frame just described. The upholstery frame may be made of wood, and may consist of top, intermediate, and bottom boards 44, 46 and 48, and end boards 52 and 54, all suitably secured to one another as necessary and to the metal frame referred to by any conventional means.

The upper bar 38 of the metal frame is pro-

vided with forward and rearward clasps or keepers 56 and 58, these clasps consisting of small plates welded to the inner face of the bar 38 and having downwardly opening slots 60 therein to fit over and latch with the lug 26 on the forward posts of the base member and the lugs 36 carried at the ends of the back member K.

The metal frame is likewise equipped with similar lower clasps 62 and 64, which are adapted to engage and lock with the lower lugs 24 and 28 on the posts of the base member. While the bar 38 of the metal frame is fixed, bar 66 which carries the clasps 62 and 64 is mounted for adjustable vertical shifting movement on the metal frame, being guided in such movement by its bifurcated ends 70 which surround the vertical bars 42 of the metal frame. The adjustable movement of the lower metal bar 66 with respect to the upper metal bar 38 is accomplished by a vertical stem 72 which has a bearing as at 74 (see Fig. 6) in the bar 40 and in the wooden board 48, and which has a heavy threaded portion 76 which engages interior threads 78 in a bushing block 80 carried by the bar 66, it being understood that the latter may be of channel shape substantially throughout its entire length with the threaded bushing 80 secured within the channel as by welding.

The upper end of the stem 72 is mounted for turning movement in a bushing 82 likewise secured in the upper metal fixed channel bar 38, and the stem has a head 84 positioned in a well 86 in the intermediate board 46, whereby suitable tools such as a wrench may be applied to turn the stem 72, and thus raise and lower the metal bar 66. An adjustable collar 88 may be secured in proper position on the stem 72 against the lower surface of the bushing 82 to retain the stem 72 against vertical movement, whereby when the stem 72 is turned, the non-rising stem action of the threads 76 and 78 will cause the bar 66 to move upwardly and downwardly.

As is apparent from the above description, the clasps 62 and 64 are carried on the moving bar 66, and when the stem 72 is turned in the proper direction, these clasps are moved upwardly to engage beneath and around downwardly directed lugs 24 and 28.

The back member K may comprise a horizontal wooden board 90, side wooden frame members 92 and a top cross wooden member 94, and the members 92 are braced in their attachment to the member 90 by unitary metal brackets which carry the clasps 32 with their upwardly directed lugs 36. As shown in Figure 1, these brackets comprise an angle member 96 having an upwardly and diagonally extending metal brace 98 rigid therewith and which attaches in any suitable way to the wooden members 92 of the back, the vertical portion of the angle member having attached thereto, as by welding, the clasp 32 and its forks 34 and 36. The bracket 96 is secured to the board or plate 90 in a suitable way, as by screws or equivalent means.

In assembling the chair, the back member K is first mounted on the posts 20 and 22 by inserting the forks 34 of the clasps 32 downwardly into the top slots 30 in the posts. When this is done, the posts 20 and 22 then have upwardly extending securing lugs 36 substantially the same as the similar lugs 26 on the forward legs 16 and 18.

Thereafter, the side members of the chair are assembled as will be apparent in Figure 1, by positioning the slots 60 of the clasps 56 and 58 over the lugs 26 and 36, with the bar 66 in its lowermost position, and with the slots in the lugs 62 and 64 disposed below the lower lugs 24 and 28 on the posts 16 and 20. Thereafter, a suitable wrench is applied to the nut 84 on the stem 72 and upon properly turning this stem the bar 66 is shifted upwardly until the slots in the clasps 62 and 64 engage around and lock against the lower surfaces of the lugs 24 and 28. The stem is turned until the clasps are tightly locked with the lugs. Of course, the same operation is carried out for the opposite side member of the chair.

After this operation, the side members are not only securely attached to and locked onto the posts of the base member, but also, the back member is securely locked in place in the slots on the upper ends of the rearward posts 20 and 22, and the chair is in a rigid condition suitable for use, just as if the side and back members were integrally secured to the base member, as by such conventional means as nailing or screwing the parts together, as in conventional constructions.

While only the framework of the chair is shown in the drawings, it will be understood that the side, base and back members may be covered with suitable upholstering, as is well known in the art, to provide a chair of the upholstered or overstuffed type. Of course, the invention is applicable to other than the upholstered type of chair, and can be used in assembling openwork chairs, made of wood or metal or other suitable materials, and the application of the invention is not confined to any particular form of chair.

Referring to Figures 2 and 7, a bottom support may be provided for the seat cushions of the chair, consisting of a framework which is placed on and is supported by the front and rear rods 12 of the base member. This bottom support may comprise an upwardly extending front cross-piece 100, a rear cross-piece, and longitudinally extending bottom supporting slats 104. The bottom support may also have vertical and angularly disposed supporting members 106 and 109 and a top cross-piece 108 attached thereto providing a suitable frame for carrying the usual upholstery necessary to complete the back of the chair. The bottom support may also have an upwardly extending cross slat 107, so that the seat cushion or cushions may be held on the slats 104 between the cross-pieces 100 and 107. In the design shown, the bottom support is arranged to receive seat cushions of suitable thickness, which would be positioned as described between the side members S of the chair, and the seat cushions may be of a thickness to extend up substantially to the bottom board 90 of the back member K. The back member K will be upholstered above the board 90 to provide a cushioned back extending upwardly and rearwardly from the seat cushions or similar upholstery on the bottom support. The side members will be covered with suitable upholstering, leaving the clasp members exposed, so that the upholstered parts may be assembled and locked together in the manner previously described.

It will be understood that while the invention described is applied to a chair, it is equally applicable to other articles of furniture, such as sofas and the like.

I claim:

1. An article of furniture comprising a base member and side members detachably secured thereto, said base member having means to sup-

port it on the floor and front and rear posts on each side thereof, said posts each having spaced outwardly presented upper and lower supporting clasps, said side members each having an upper and a lower horizontal bar, each of said bars having inwardly presented pairs of clasps thereon, the clasps of said pairs being spaced from one another a distance substantially equal to that between said posts whereby they may engage the cooperating clasps on said posts, means for mounting one of said bars for vertical bodily shifting movement with respect to the other of said bars, and manually operable means on said side members engaging said movable bar for vertically shifting it to secure said cooperating clasps in engagement with one another.

2. An article of furniture comprising a base member, opposite side members and a back member, said base member having supporting posts at its rearward corners, said posts having back member supporting recesses adjacent their upper ends, said back member having outwardly extending lugs on opposite sides thereof adapted to extend through and outwardly beyond said recesses to support said back member on said posts, said side members having clasps adjacent their rearward ends arranged to engage over the extending portions of said lugs to retain them in their recesses and to thereby suspend said side members on said base member.

3. An article of furniture comprising a base member, opposite side members and a back member, said base member having supporting posts at its rearward corners, said posts having side member engaging locking means adjacent their lower ends and back member supporting recesses adjacent their upper ends, said back member having outwardly extending lugs on opposite sides thereof adapted to extend through and outwardly beyond said recesses to support said back member on said posts, and vertically spaced securing means on each of said side members at the rearward end thereof comprising cooperating lower locking means to engage said locking means on said posts and upper clasp members to engage the extending portions of said lugs and retain them in their recesses while supporting said side members on said base member.

4. An article of furniture comprising a base member, opposite side members and a back member, said base member having supporting posts at its four corners, the posts at the forward end of said base member having side member engaging locking means, the posts at the rearward end of said base member having back member supporting recesses therein, said back member having outwardly extending lugs on opposite sides thereof adapted to extend through and outwardly beyond said recesses to support said back member on said rearward posts, said side members having cooperating locking means at their forward ends to engage said locking means on said forward posts and clasps at their rearward ends to engage the extending portions of said lugs and retain them in their recesses while supporting said side members on said base member.

5. A side member for an article of furniture comprising a frame, means comprising upper and lower pairs of equally spaced clasps for locking and securing the side members to a base member of the article of furniture, each of said pairs comprising a clasp positioned near the front end of said side member and a clasp positioned near the rearward end of said side member, one of said pairs of clasps being fixedly mounted on said frame, a connecting member which carries said other pair of clasps and which is mounted for vertical movement on said frame, and manually operable means on said frame for vertically adjusting said connecting means to move the cooperating clasps of said pairs from and toward one another.

6. An article of furniture comprising a base member and side members detachably secured thereto, said base and side members each having upper and lower pairs of equally spaced clasps for locking and securing the side member to the base member, each of said pairs comprising a clasp positioned near the front end and a clasp positioned near the rearward end of its said member, one of said pairs of clasps being carried on a connecting rod which is mounted for vertical movement on its said member, and manually operable means on the member which carries said connecting rod for adjusting said rod vertically to move the clasps carried thereby from and toward engaging clasps on the other of said members.

7. In an article of furniture, a base having horizontal rails forming a seat support, vertical wall members on each side of the seat support, and chair sides detachably secured to said wall members of said base, said chair sides each having a rigid frame member adapted to support upholstery covering thereon, said frame and wall members each having upper and lower pairs of equally spaced clasps which engage the cooperating clasps on the other member to lock and secure the chair sides to the base, each of said pairs comprising a clasp positioned near the front end and a clasp positioned near the rearward end of its said member, one of said pairs of clasps being carried on a connecting rod which is mounted for vertical movement on its said member, and manually operable means on the member which carries said connecting rod for adjusting said rod vertically to move the clasps carried thereby from and toward engaging clasps on the other of said members, said base having slat members extending between said rails to support a seat cushion thereon between said chair sides.

8. A construction in accordance with claim 7 wherein the article of furniture has a back detachably secured to said base.

9. A construction in accordance with claim 7 wherein the article of furniture has a back with securing lugs arranged to be locked between cooperating clasps at the rearward ends of said members to detachably secure said back to said base.

WAYNE L. CLIFTON.

REFERENCES CITED

The following references are of record in the file of this patent:

UNITED STATES PATENTS

Number	Name	Date
277,454	Bruschke	May 15, 1883
602,574	Dalton	Apr. 19, 1898
1,480,416	Pohl	Jan. 9, 1924
1,684,220	Percival	June 19, 1928

FOREIGN PATENTS

Number	Country	Date
177,725	Great Britain	Apr. 6, 1921
564,525	Great Britain	Oct. 2, 1944