Feb. 19, 1952 T. GEFFAS 2,586,219

HERNIA STAY

Filed June 2, 1950

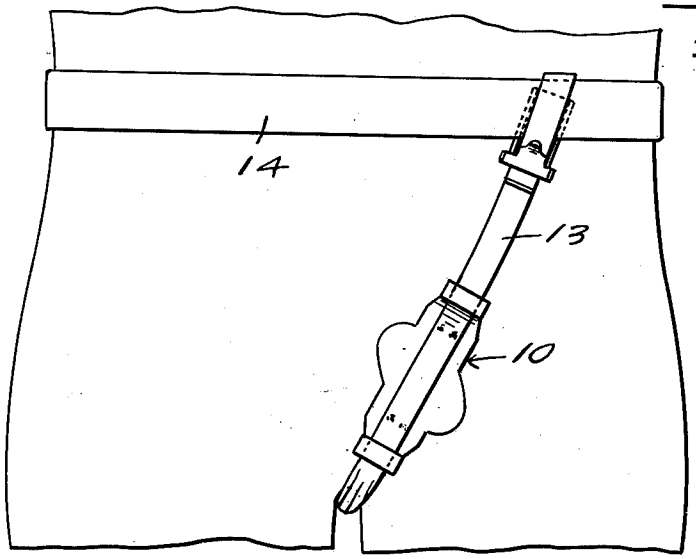

FIG. 1.

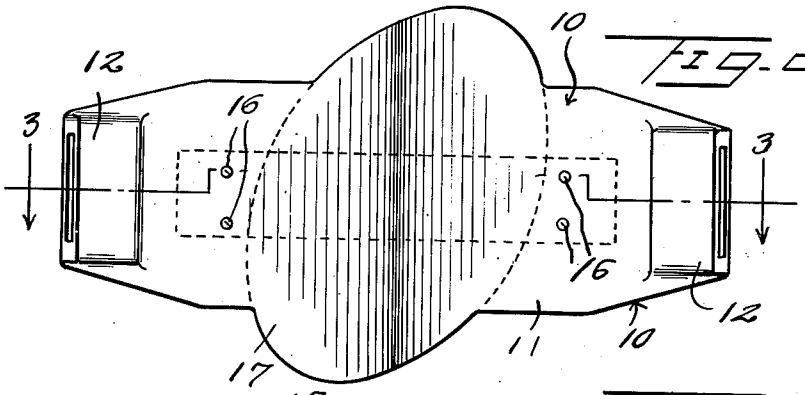

FIG. 2.

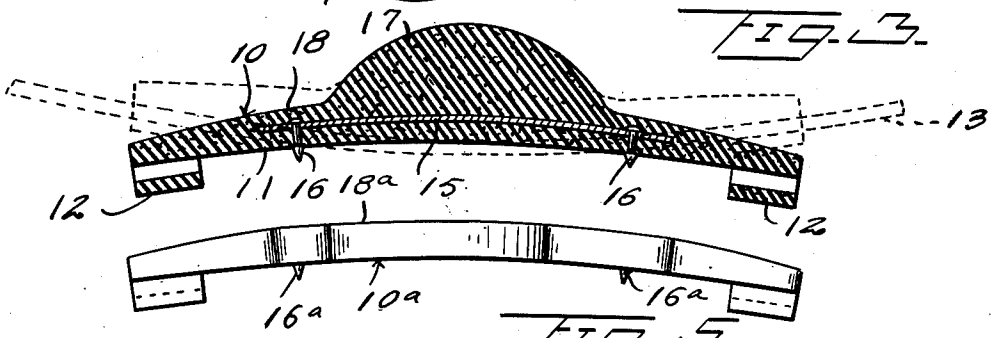

FIG. 3.

FIG. 5.

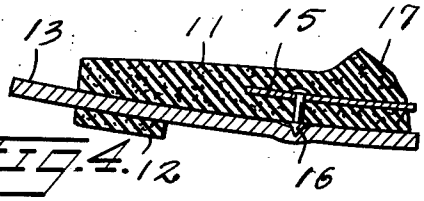

FIG. 4.

INVENTOR

Theodore Geffas

BY Kimmel & Crowell

ATTORNEYS

Patented Feb. 19, 1952

2,586,219

UNITED STATES PATENT OFFICE

2,586,219

HERNIA STAY

Theodore Geffas, Ogden, Utah

Application June 2, 1950, Serial No. 165,769

2 Claims. (Cl. 128—117)

1

This invention relates to hernia stays.

An object of this invention is to provide a support or stay which is designed to afford relief from hernia.

Another object of this invention is to provide a support or stay which will be under compression when in applied position so as to hold the rupture back in proper position.

In a modified form, which has been designed for use in post operative cases, the raised portion is eliminated so that there will not be any undue pressure on the affected part, but at the same time the affected part will be held in proper position to permit proper and unstrained healing thereof.

A further object of this invention is to provide a stay or support which includes means whereby said stay will positively remain in its adjusted position on the holding strap.

Further objects are to provide in a device of the kind described, a hernia stay which may readily be kept in a sterile and fully sanitary condition through easy separation and cleaning of its several components, and one which is smooth and has practically no exposed metal parts and will be very thin and flat under the clothing of the wearer.

With the above and other objects in view, my invention consists in the arrangement, combination and details of construction disclosed in the drawings and specification, and then more particularly pointed out in the appended claims.

In the drawings:

Figure 1 is a detailed front elevation of a hernia stay constructed according to an embodiment of this invention, showing the pad in applied position,

Figure 2 is a detailed front elevation of the stay body removed from the holding strap,

Figure 3 is a longitudinal section taken on the line 3—3 of Figure 2,

Figure 4 is an enlarged fragmentary longitudinal section of one end portion of the stay body under compression as applied,

Figure 5 is a detailed side elevation of a modified form of the stay.

Referring to the drawings, the numeral 10 designates generally an elongated resilient or flexible body which is longitudinally bowed with the concave side 11 thereof outermost. The body 10 has projecting from the concave side thereof adjacent each end a guide loop 12 through which a holding strap 13 is adapted to engage. The strap 13 is adapted to be engaged with a horizontally disposed belt 14 disposed about the waist of the

2

wearer. The body 10 has embedded therein an elongated and longitudinally extending flat spring 15 which is normally bowed in the same direction as the body 10, and a pair of outwardly extending pins 16 are secured to the spring 15 at or near each end of same, and project through the body 10 on the outer or concave side of the latter at points between the belt guide loops 12.

An elliptical convex resilient raised portion 17 is formed integral with the body 10 being disposed between the ends of the body 10 and projecting from the normally convex side 18 of the body. The raised portion 17 is adapted to engage the affected part and as shown in Figure 2 is of substantially elliptical configuration and disposed on an oblique angle with respect to the length of the body 10.

By disposing the raised portion 17 on an oblique angle with respect to the length of the body 10, the stay may be used for a rupture on either the right or left hand side. As herein disclosed the stay is mounted on the left side, but where it is used on the right hand side, the structure is reversed end for end, the lower end being disposed uppermost so that the longitudinal axis of the stay will be inclined upwardly and outwardly in the same manner as shown for the left side of the wearer.

The strap 13 is threaded through the loops 12, and when the stay is adjusted lengthwise of the strap and this strap 13 is firmly secured at the ends thereof to the upper horizontal belt 14, the pressure applied by the strap 13 will reversely bend the body 10, putting the raised portion 17 and surface 18 under compression, as shown in dotted lines in Figure 3, and at this time the points 16 will project partly into the adjacent inner side of the strap 13 so that the stay will be thereby securely held against vertical or lengthwise movement with respect to the strap 13. The stay shown in Figures 2, 3 and 4 is designed particularly for use in holding a rupture back in place before an operation is performed.

For post operative use a similar stay structure is used eliminating the convex resilient raised portion 17. This post operation stay structure is shown in Figure 5 and includes an elongated body 10*a* similar to the body 10 which has a resilient spring embedded therein and strap engaging pins 16*a* secured to the spring and projecting from the concave side of body 10*a*.

The normally convex side 18*a* of the body 10 is disposed on a relatively long curvature with the raised portion 17 eliminated so that where the stay structure shown in Figure 5 is used there

will not be any undue or concentrated pressure applied to the affected part, but such part will be under even distributed pressure so that the affected part will not become displaced before the part has healed. Preferably the body 10 is formed of rubber and raised portion 17 is also formed of the same material. This rubber may be sponge rubber or other relatively soft rubber, and the spring 15 which is embedded in the rubber will hold the body 10 against undue flexing.

What I claim is:

1. A stay comprising an elongated longitudinally bowed flexible body normally concaved outwardly, a bowed spring embedded in said body, a pair of guide loops projecting from the outer concave side of said body through which a supporting strap is adapted to engage, and positioning retaining pins fixed to said spring and projecting from the concave side of said body for engagement into the strap, tightening of said strap reversing the concavity of said body to thereby hold the latter in adjusted position in conformity to the human body.

2. A stay comprising an elongated longitudinally bowed flexible body normally concaved outwardly, a bowed spring embedded in said body, a pair of guide loops projecting from the outer concave side of said body through which a supporting strap is adapted to engage, a convex raised portion projecting from the normally convex side of said body, and strap retaining pins fixed to said spring and projecting from the normally concave side of said body for engagement into the strap, tightening of said strap reversing the concavity over said body to thereby hold the body in adjusted position in conformity to the human body

THEODORE GEFFAS.

REFERENCES CITED

The following references are of record in the file of this patent:

UNITED STATES PATENTS

Number	Name	Date
1,240,109	Walton	Sept. 11, 1917
2,070,727	Hamann	Feb. 16, 1937
2,372,010	Raw	Mar. 20, 1945