Dec. 19, 1950 D. E. HOUGHTON 2,534,598

LOOM SHUTTLE

Filed Aug. 31, 1949 2 Sheets-Sheet 1

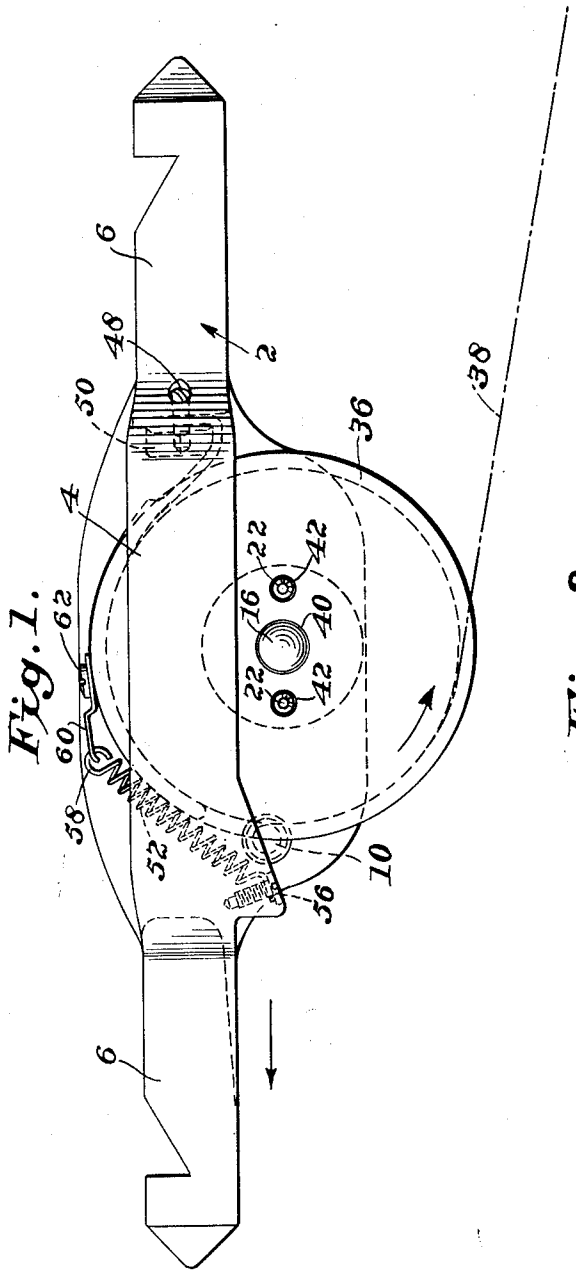

Fig. 1.

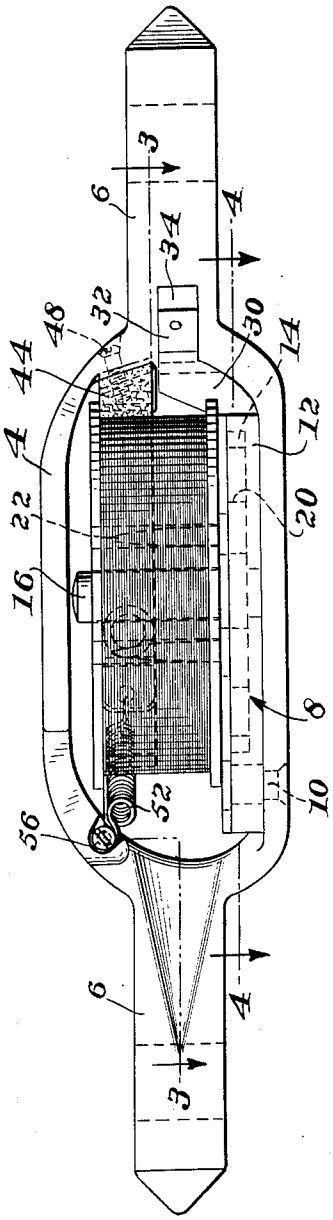

Fig. 2.

INVENTOR:
Daniel E. Houghton,
BY
Cushman, Darby & Cushman
ATTORNEYS.

Dec. 19, 1950 D. E. HOUGHTON 2,534,598

LOOM SHUTTLE

Filed Aug. 31, 1949 2 Sheets-Sheet 2

Fig. 3.

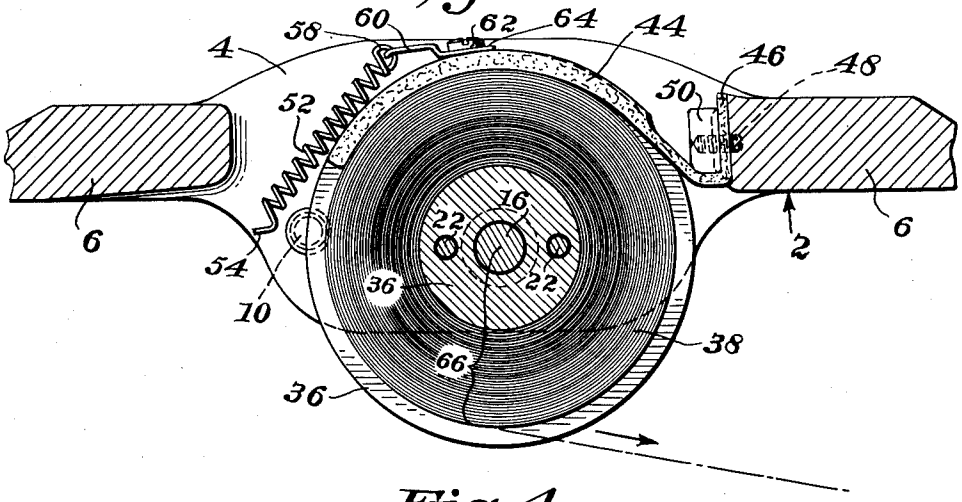

Fig. 4.

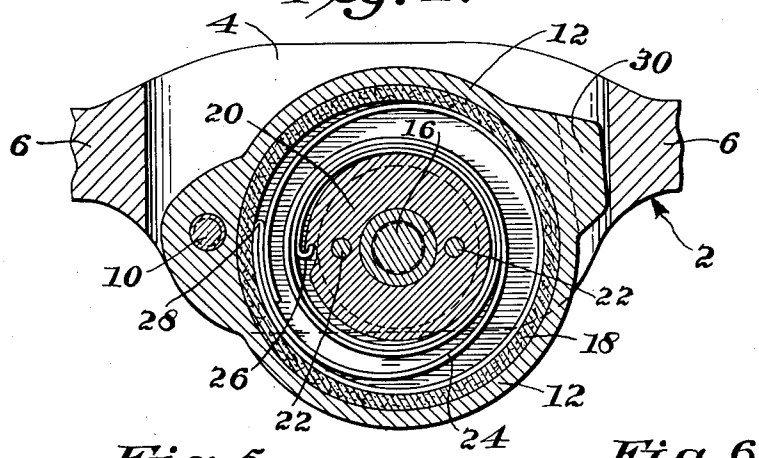

Fig. 5.

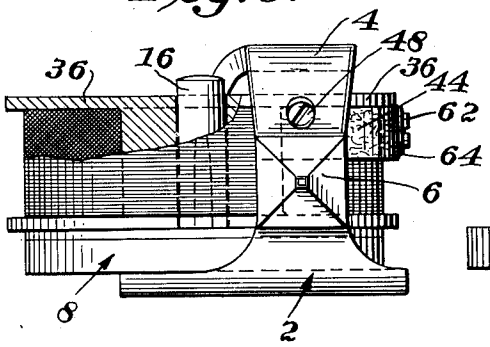

Fig. 6.

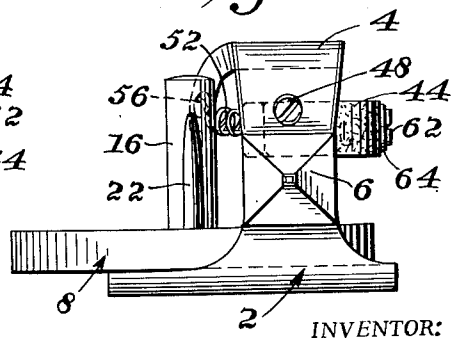

INVENTOR:

Daniel E. Houghton,

BY

Cushman, Darby & Cushman

ATTORNEYS.

Patented Dec. 19, 1950 2,534,598

UNITED STATES PATENT OFFICE

2,534,598

LOOM SHUTTLE

Daniel E. Houghton, Washington, D. C., assignor, by mesne assignments, to New York Wire Cloth Company, York, Pa., a corporation of Delaware

Application August 31, 1949, Serial No. 113,381

2 Claims. (Cl. 139—200)

1

This invention relates to improvements in loom shuttles and, more particularly, it is concerned with tensioning devices which provide substantially constant tension to the weft thread fed from a shuttle.

General field of invention

It is a well known fact in the weaving of cloth that some means must be provided for causing the weft thread leaving the shuttle in the weaving operation to have some predetermined degree of tension. Numerous, more or less successful means have been employed heretofore for providing this weft thread tension, many of which are specifically designed for the weaving for particular types of fabrics or the like.

In the production of hardware and screen cloth fabrics on wire cloth looms, standard weaving equipment includes shuttles in which rotation of the bobbin is restrained by spring actuated units which retard the rotation of the bobbin through a constant frictional force. In this fashion, tension is imparted to the weft thread as it is fed from the bobbin, but whereas the force acting against rotation of the bobbin is substantially constant, the degree of tension on the weft thread varies as the thread unwinds from the bobbin. Thus, as the thread unwinds, the spring actuated frictional force remains the same and since the diameter of the thread on the bobbin becomes less, i. e., the lever arm on which the thread acts decreases and the thread must be pulled with an ever increasing force in order to overcome the force of the spring means.

When hardware and screen cloth weaving machines are operated at relatively high speeds, the weft thread tension becomes a critical factor. This is due to the fact that as shuttle speed is increased, tension upon the weft thread rapidly increases and quickly reaches the breaking point. Therefore, as a practical matter, the upper limit for speed of operation of these machines is controlled by the threshold speed for breaking of the weft thread.

Because of the change of weft thread tension with bobbin fullness, as discussed above, associated with the shuttles on wire cloth looms, the average threshold breaking speed is higher when a full bobbin is used in the machine than when the bobbin becomes empty. Consequently, as the bobbin on a particular machine runs out, the loom must either be slowed down or the operator must run the risk of having the loom become inoperative, due to breaking of the weft thread.

2

Objects

A principal object of this invention is the provision of new loom shuttles incorporating a combination of two tensioning devices which cooperate to provide a degree of tension to the weft thread as it is fed from the shuttle which is substantially independent of the quantity of thread wound on the bobbin. Further objects include:

(1) The provision of loom shuttles for wire cloth machines which permit the looms to be run at relatively high rates without danger of breakage of the weft thread, regardless of the quantity of thread in the shuttle, and

(2) The provision of new thread tensioning means on loom shuttles which will modify the action of tensioning members generally used heretofore that provide thread tension which increases as the thread is unwound from the bobbin, so that the thread tension is substantially constant, regardless of the quantity of thread in the shuttle.

Still further objects and the entire scope of applicability of the present invention will become apparent from the detailed description given hereinafter; it should be understood, however, that the detailed description and specific examples, while indicating preferred embodiments of the invention, are given by way of illustration only, since various changes and modifications within the spirit and scope of the invention will become apparent to those skilled in the art from this detailed description.

General description

These objects are accomplished according to the present invention by providing a loom shuttle with thread tensioning means comprising two cooperating units. The first unit comprises means for urging the bobbin against rotation with a force which is substantially independent of the amount of thread on the bobbin, while the second unit comprises a member for engaging the outer layer of thread wound on a bobbin fitted in the shuttle with a frictional force which is proportional in magnitude to the quantity of thread on the bobbin providing a tensioning force which decreases as the amount of thread in the bobbin decreases.

Detailed description

Details of construction and the manner of operation of my new loom shuttles and tensioning devices will become more apparent from the de-

tailed description given below in conjunction with the drawings, in which:

Figure 1 is a plan view of one form of a shuttle incorporating the novel tensioning devices of this invention;

Figure 2 is a front view of the shuttle shown in Figure 1;

Figure 3 is a sectional view of the shuttle of Figure 1, taken along the line 3—3 of Figure 2;

Figure 4 is a sectional view of the shuttle of Figure 1, taken along the line 4—4 of Figure 2;

Figure 5 is an end view partly broken away of the shuttle shown in Figure 1 with the bobbin in operating position therein, and

Figure 6 is an end view corresponding to Figure 5 with the bobbin removed from the shuttle.

Referring in detail to the drawings, the shuttle comprises a frame 2 having a central annular portion 4 and a pair of notched extensions 6 thereon for engagement with loom transfer-thrust bars (not shown) in known fashion.

A bobbin-carrying member 8 is pivoted on pin 10 within the annular portion 4 of the frame. This carrying member 8 consists of a plate 12 having a circular recess 14 therein in the middle of which there is fastened an upwardly extending bobbin hub 16. A washer of leather, felt, cork or similar resilient material 18 is fitted into the recess 14 around the inner periphery thereof. Concentric with the hub 16 is a bobbin-carrying plate 20 which is located in the member 8 so that it may rotate about the hub 16. This plate has two bobbin-engaging pins 22 fastened thereon and extending upwardly from the top surface thereof.

A spiral spring 24 is fixed by means of a hooked end 26 to the plate 20 and this spring is compressed between the plate 20 and the washer 18 so that the free end 28 of the spring frictionally engages the washer 18.

An angular extension 30 is provided on the member 8 having an end 32 which engages with the latch 34 permitting the member 8 to be pivoted sideways in the shuttle for interchange of bobbins.

Bobbin 36 having weft thread or wire 38 wound thereon is positioned in the shuttle with the central hole 40 of the bobbin surrounding the hub 16 and the smaller holes 42 enclosing the pins 22.

An elongated strip of leather, plastic or similar flexible material 44 is fastened at the end 46 by means of machine screw 48 and nut 50 to the shuttle frame 4. The strip member 44 is bent around the outside layer of the thread 38 in the shuttle and held in this position under tension by the coil spring 52 which is fastened at one end 54 to the frame 4 by means of screw 56. The other end 58 of the spring connects with the strip 44 through a metal element 60 which is fastened by rivet 62 to the strip 44.

The length of the spring 52 and its tension characteristics are adjusted so that total tension on the thread 38 through the combined action of the spring 24 and the strip or snubber 44 will be nearly uniform, no matter whether the bobbin is full or empty.

Description of operation

The operation of these new units is as follows: By disconnecting the latch 32, the member 8 is pivoted sideways to allow a fully wound bobbin 36 to be placed over the hub 16 and pins 22 after which the member 8 is returned into the frame and latched in position, as shown in Figure 5.

Weft thread is then tied into the cloth and the shuttle inserted in the loom in known fashion.

With the shuttle proceeding back and forth across the loom, the bobbin 36 and the carrying plate 20 revolve together around the hub since they are operatively tied together through the engaging pins 22. The hooked end 26 of the spring engages the plate 20 as the weft is pulled off the bobbin, so that the spring 24 is wound around the plate 20, putting a tension on the weft 38. The spring continues to wind up until the tension is sufficient to overcome frictional resistance between the spring end 28 and the washer 18, at which time the end 28 of the spring begins to slip around the washer. The spring stays in this position as long as the weft continues to be drawn off from the bobbin, but if any slack appears in the weft, the spring turns the bobbin backward, taking up the slack.

As the outside diameter of the thread on the bobbin gets smaller with continual feeding of the thread, the tension in the weft, due to spring 24, becomes greater because the lever arm 66 on which the thread 38 acts becomes smaller.

Tension is also impressed on the weft 38 by the snubber 44 due to frictional engagement between the inside of the snubber and the outside layer of the thread 38 wound on the bobbin. However, as more thread is wound off the bobbin, this outside diameter becomes smaller with the consequence that tension applied by the snubber 44 gradually decreases. Hence, the two tensioning devices, i. e., essentially the springs 24 and 52 and their associated members, cooperate to provide a substantially constant tension to the weft, regardless of the quantity of thread wound on the bobbin.

Conclusion

A preferred form of loom shuttle incorporating the novel features of this invention has been described, but it will be recognized that various modifications can be made in the particular structures shown and described and still obtain the unique advantages afforded by these new structures. As explained, the principal characteristic of the new types of shuttles is their ability to deliver weft thread under a predetermined tension which does not vary as the bobbin becomes empty. This feature can, of course, be utilized to advantage in many types of weaving operations, but I have found it to be particularly useful in connection with wire cloth weaving looms, because it permits these looms to be operated at relatively higher rates of speed over long periods of time, due to decreased tendency for the weft thread to be broken.

I claim:

1. A loom shuttle comprising a pivoted bobbin-carrying member including a rotatable bobbin-carrying plate having upwardly extending bobbin-engaging pins thereon surrounded with an upwardly extending bobbin hub, a washer concentric with said hub beneath the plate, a spiral spring connected at the inner end to said plate compressed between the plate and said washer, the outer unattached end of the spring bearing against said leather strip for frictional rotation in contact with the strip, a flexible strip attached at one end to the shuttle above said plate tensioned across the shuttle between the sides of the bobbin by means of a coiled spring connected at one end to the shuttle and at the other end to the unattached end of said flexible strip.

2. A loom shuttle in which weft thread is fed from the bobbin under a substantially constant

tension, regardless of the quantity of thread wound on the bobbin, comprising in combination a shuttle frame, a bobbin-carrying member comprising a circularly recessed plate member pivoted to said frame having a washer around the inner periphery of said recess, a bobbin hub fixed on said plate extending upwardly from the center of said recess, a circular bobbin-carrying plate surrounding the base of said hub having bobbin-engaging pins extending upwardly from the top of the carrying plate and a spiral spring attached at one end to said carrying plate having the other end frictionally engaging said washer compressed between said carrying plate and washer, a removable bobbin positioned over said hub and pins, an elongated strip fixed at one end of said frame so that the strip extends across the bobbin between the sides thereof, a coiled spring fixed upon said frame diametrically across the bobbin from said fixed strip end, the unfixed end of said

coiled spring being attached to the free end of said strip, whereby the side of said strip bears against thread carried by the bobbin and urges the bobbin against rotation by a frictional force proportional to the quantity of thread carried by the bobbin.

DANIEL E. HOUGHTON.

REFERENCES CITED

The following references are of record in the file of this patent:

UNITED STATES PATENTS

Number	Name	Date
108,409	Towle	Oct. 18, 1870
384,187	Blackman	June 5, 1888
547,049	White	Oct. 1, 1895
1,373,268	Southwick	Mar. 29, 1921
2,417,941	Loos	Mar. 25, 1947