Dec. 12, 1950 D. H. MITCHELL 2,533,493

PORTABLE RADIO DEVICE

Original Filed Feb. 20, 1942 4 Sheets-Sheet 1

Fig. 1.

Fig. 2.

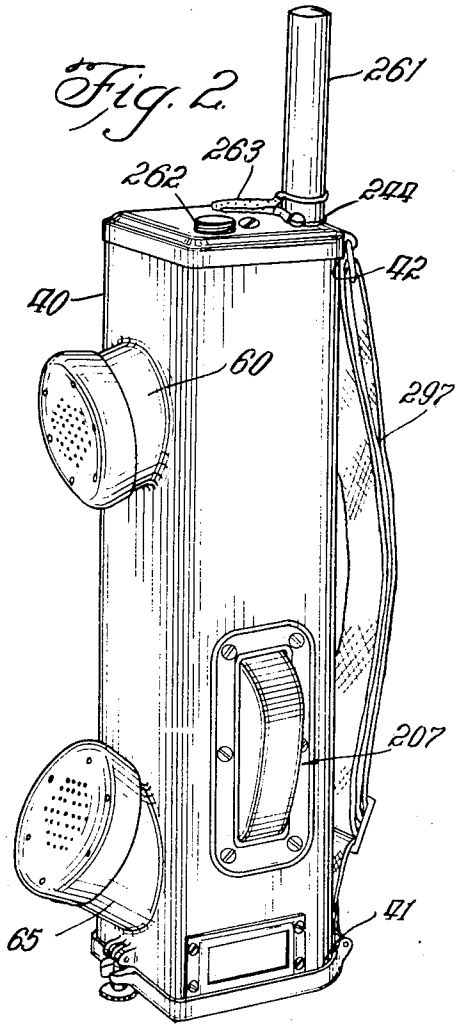

Inventor:
Donald H. Mitchell
By: Mueller and Mason
Att'ys

Dec. 12, 1950 D. H. MITCHELL 2,533,493

PORTABLE RADIO DEVICE

Original Filed Feb. 20, 1942 4 Sheets-Sheet 2

Fig. 5.

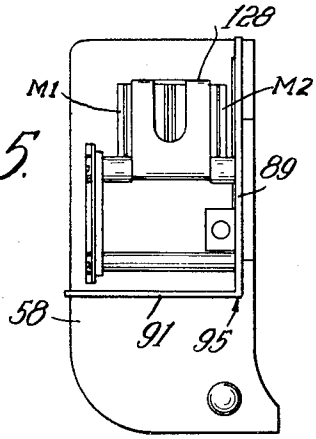

Fig. 4.

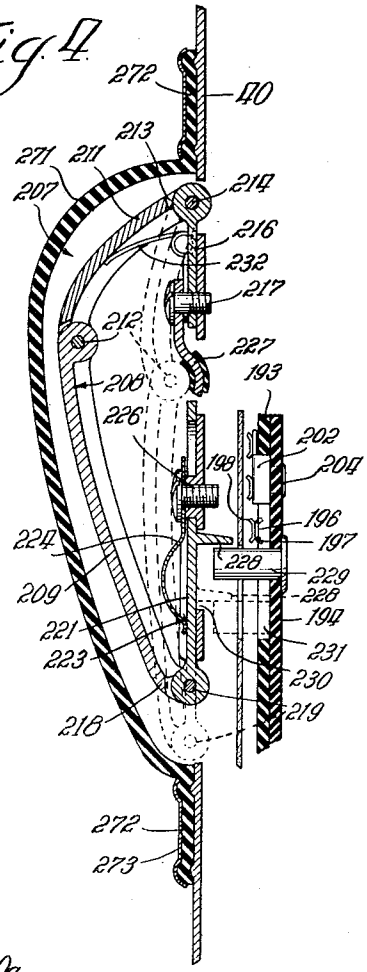

Fig. 3.

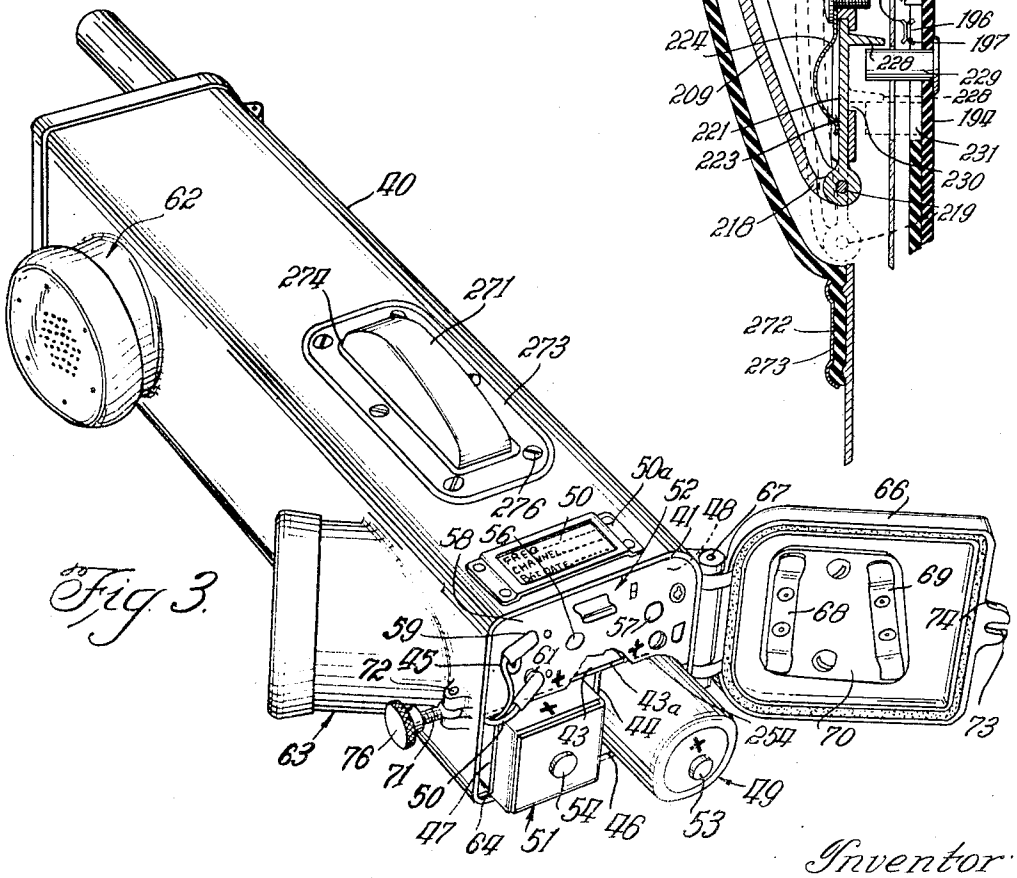

Inventor:
Donald H. Mitchell
By: Muelle, and Mason
Atty's

PORTABLE RADIO DEVICE

Original Filed Feb. 20, 1942 4 Sheets-Sheet 3

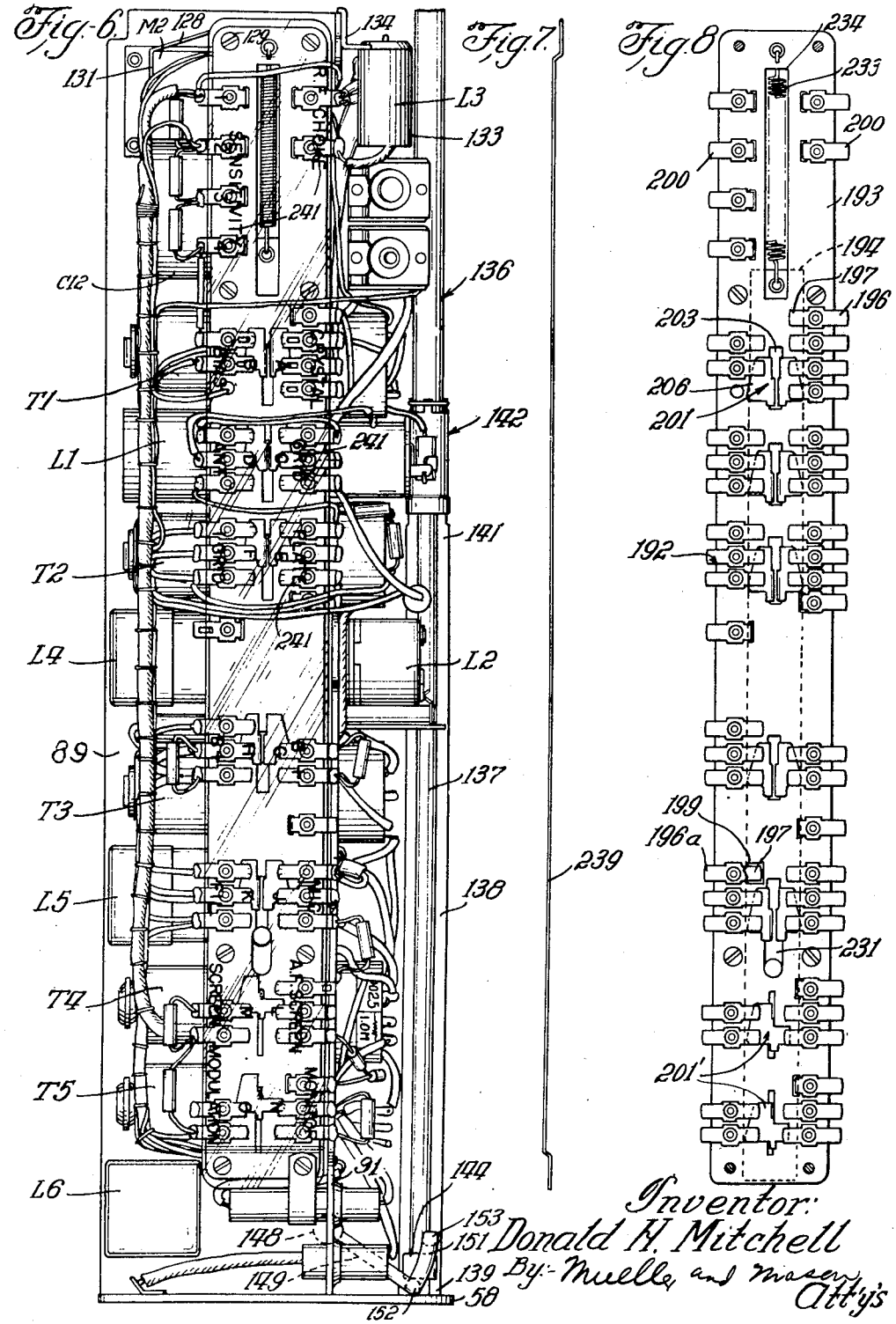

Dec. 12, 1950 D. H. MITCHELL 2,533,493

PORTABLE RADIO DEVICE

Original Filed Feb. 20, 1942 4 Sheets-Sheet 4

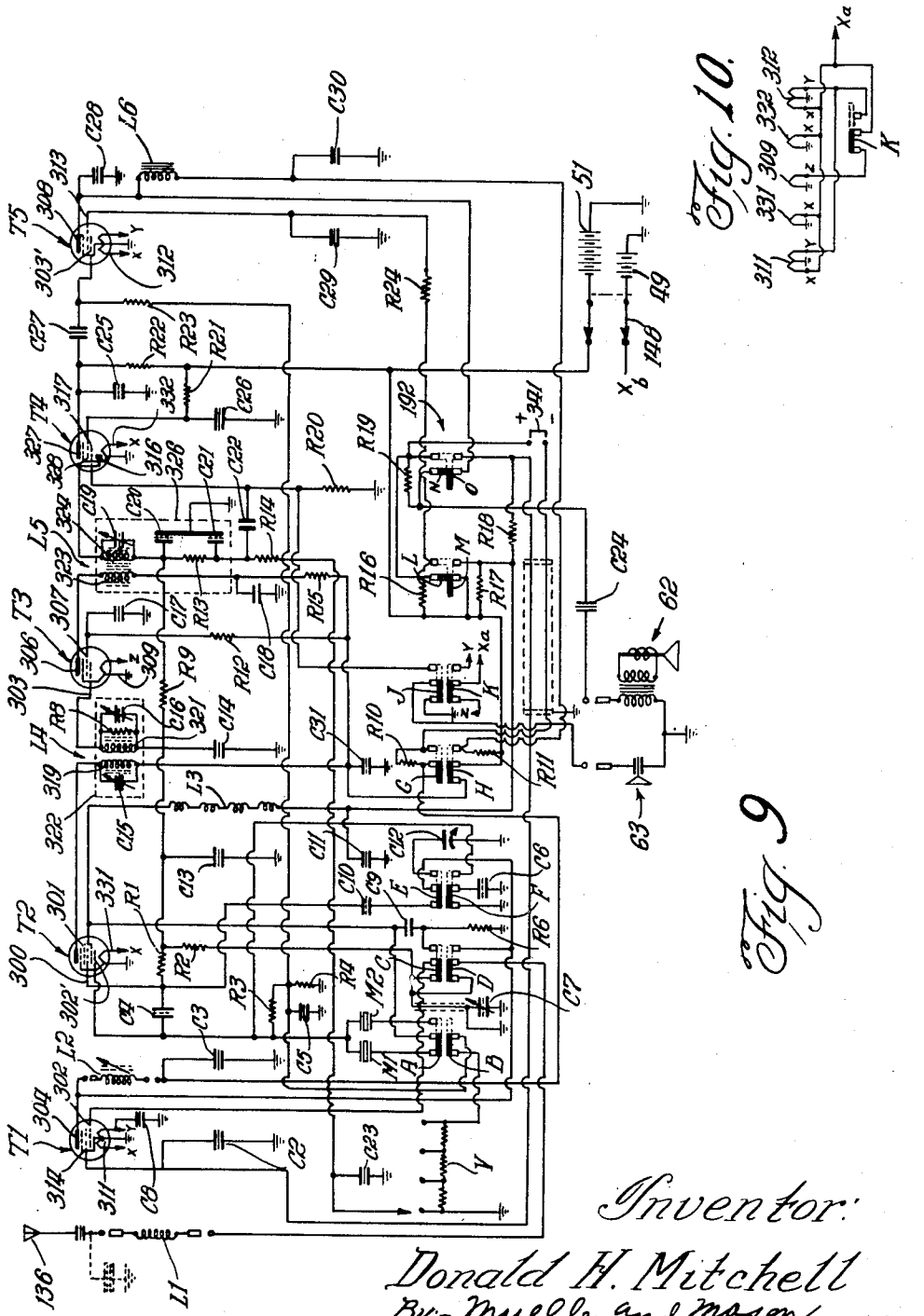

Fig. 9

Fig. 10.

Inventor:
Donald H. Mitchell
By:- Muellen and Mason Att'y's

Patented Dec. 12, 1950 2,533,493

UNITED STATES PATENT OFFICE

2,533,493

PORTABLE RADIO DEVICE

Donald H. Mitchell, Chicago, Ill., assignor to Motorola, Inc., a corporation of Illinois

Original application February 20, 1942, Serial No. 431,722. Divided and this application May 31, 1946, Serial No. 673,219

3 Claims. (Cl. 250—13)

1

The present invention relates generally to radio apparatus and in particular to a portable self-contained combination radio receiver and transmitter unit. This application is a division of copending application Serial No. 431,722, filed February 20, 1942, now Patent No. 2,439,408, dated April 13, 1948.

The combination portable radio receiver and transmitter units now generally used are not entirely satisfactory because of their bulk and weight, and the conveniences encountered in setting them up for operation. In most instances these prior art sets are not self-contained as a package unit and usually include an earphone unit or an antenna unit which are separately attachable to the body of the set by extension wires or the like. As a result these are not capable of operation immediately on reaching a new destination or while enroute to such destination, since some time must be used for assembling the earphone or the antenna units and for making various tuning and control adjustments. Further because of the bulk of the sets they are difficult to handle and generally too heavy to be manually supported while in operation. In fact many of them require special supporting means upon which the various parts of the set are relatively arranged in a manner to facilitate their use. The maneuverability and the flexibility of application of these sets to the various field demands required of sets of this type, such as in any Army signal corps, police work and the like, is thus appreciably restricted. Even after the sets are assembled for operation considerable delay is usually involved in the transmission and reception of signals because of the time lost in changing from transmitting to receiving and vice versa. Also because of their relatively complicated structure, the component parts of the prior art sets are usually completely dismantled for servicing and replacement purposes. Another objection to these sets is that they are open to the atmosphere whereby their use on rainy days is generally impaired or restricted to places having suitable shelters therefor. Further these sets are generally unprotected against rough handling or dropping so that great care must be exercised at all times to prevent permanent injury thereto.

It is an object of this invention, therefore, to provide an improved radio apparatus.

Another object of this invention is to provide an improved combination radio receiver and transmitter unit.

It is a further object of the invention to provide improved switching apparatus for selectively

2

intercoupling the electron discharge tubes of a combined radio transmission and receiving system to provide either a signal receiving channel or a signal transmitting channel.

It is another object of the invention to provide an improved arrangement for changing the resonant frequency of at least one of the tuned stages of the system, each time the switching apparatus is operated to change the character of the system.

It is still another and more specific object of the invention to so arrange the available tubes of the system, the switching apparatus and the available circuit elements that an efficient signal receiving channel of the superheterodyne type is provided each time the switching apparatus is operated to condition the system for signal reception, and an efficient transmission channel of the modulated carrier type, which utilizes a large proportion of the apparatus used in the receiving channel, is provided each time the switching apparatus is operated to condition the system for signal transmission.

A feature of the invention is the provision of a circuit arrangement for reducing the energy supplied to the vacuum tubes each time the switching apparatus is operated to condition the system for signal reception, whereby current drain from the current supply means of the system is minimized.

According to a further feature of the invention, facilities are provided for changing the characteristics of the system antenna circuit, each time the switching apparatus is operated to change the character of the system.

In accordance with another feature of the invention, provisions are made for changing the biasing potentials applied to the input electrodes of at least a portion of the tubes, each time the switching apparatus is operated to change the character of the system.

Still another feature of the invention is the provision of an improved arrangement for coupling the sound reproducing device of the system to the audio frequency transmission channel each time the switching apparatus is operated to condition the system for signal transmission.

A still further feature of this invention is the provision of a portable radio receiver and transmitter set, which is capable of being supported in one hand and in but one position for either transmitting or receiving, and in which a manually operated switch for changing the set to operate as either a receiver or transmitter is arranged for manipulation by the hand supporting the set.

Further objects, features, and advantages of this invention will become apparent from the following description when taken in connection with the accompanying drawings in which:

Fig. 1 shows the complete radio receiver and transmitter unit of this invention supported for operation in but one hand of the operator;

Fig. 2 is a front perspective view of the radio unit of this invention as it appears when not in use;

Fig. 3 is a perspective view of the invention looking at one end thereof, with such one end being opened to show the relative arrangement of the chassis unit and battery units, which comprise all of the component operating parts of the radio unit, in a single housing structure;

Fig. 4 is a fragmentary sectional view showing the manually operated means for actuating the change-over switch means;

Fig. 5 is an elevational view of the chassis unit looking at one end thereof and showing the clip means for retaining the receiver and transmitter crystals in assembly position;

Fig. 6 is a plan view of the chassis unit, the unit being shown in actual size;

Fig. 7 is a side elevational view of a transparent insulating member which forms a part of the switch means for changing the operation of the combination set of this invention from a receiver to a transmitter and vice versa;

Fig. 8 is a plan detail view of the change-over switch means;

Fig. 9 illustrates diagrammatically a complete circuit for the unit of this invention; and

Fig. 10 illustrates diagrammatically a circuit showing the connection of the filaments for the vacuum tubes in the diagram of Fig. 9.

In practicing this invention there is provided a portable self-contained combination radio receiver and transmitter set which is compact and light in weight so as to be easily carried about or supported in one hand. The set includes a chassis, battery, microphone and earphone units, each of which is of a preassembled construction and capable of separate assembly in or removal from a common housing. The housing has open ends which are closed by removable cover plates, the housing being divided into a plurality of longitudinally extending compartments for receiving corresponding ones of the chassis and battery units. On removal of the housing cover plates these units are immediately accessible for easy removal from the housing. The housing is of an elongated construction so that it can be readily grasped in one hand, the earphone and microphone units being relatively arranged thereon so that the set can be held in an operating position by the operator in a manner similar to that of the well known telephone set.

A single switch means is utilized to change the set over from operating as a receiver to a transmitter and vice versa. The switch means is assembled as a part of the chassis unit and is positioned entirely within the housing. A manually operated unit for actuating the change-over switch means projects outwardly from one side of the housing, and is arranged relative to the earphone and microphone units so as to be positioned below the one hand of the operator used in supporting the set in an operating position. It is necessary merely to press and release the change-over switch with such supporting hand to immediately change the set from a receiver to a transmitter and vice versa.

Because the set is easily suported in one hand to a common operating position for both receiving and transmitting, it is readily apparent that the set can be used at any time regardless of whether the operator has arrived at his destination or is still enroute to such destination. The operating portion for the switch means, the housing cover plates, and the earphone and microphone units are all in a waterproofed assembly relative to the housing so that the complete set can be submerged in water without injury thereto. Since the set is completely enclosed within a common housing structure it is capable of being subjected to considerable rough handling and abusive treatment without permanent injury thereto.

Referring to the drawings the combination radio receiver and transmitter set of this invention is illustrated in Figs. 2 and 3 as including an elongated housing 40 of substantially square cross section over its entire length and open at the ends 41 and 42 thereof. In order to make the complete set as light as possible in weight it is contemplated that the housing 40 be composed of aluminum or like material. The housing 40 is divided longitudinally by partition members 43 and 44 into compartments for an "A" battery unit 49, a "B" battery unit 51, and a preassembled chassis unit 52, respectively. The batteries 49 and 51 are the sole source of energy supply for the set. The batteries 49 and 51 have contacts 53 and 54, respectively, at one of their corresponding ends, which are positioned at the open end 41 of the housing 40. The contacts 53 and 54 are thus positioned in proximity to contacts 56 and 57 respectively, carried on an end wall 58 of the chassis unit. The chassis unit 52 is connected through jack connections 59 and 61 to an earphone unit 62 and a microphone unit 63 (Fig. 3), respectively. The wires 45 and 50 connecting the latter two units with the chassis 52 at the connections 59 and 61, respectively, are positioned in a space provided by an insulating spacing member 64 extended longitudinally of the "B" battery compartment 47.

The open end 41 of the housing 40 is closed by a door or cover plate 66 pivotally supported by hinge means 67 on the housing 40 and having contact bridges 68 and 69 carried on the inside thereof. On closing of the cover 66 the contacts 53 and 57 are connected together by the bridge member 68, and the contacts 54 and 56 are connected together by the bridge member 69. Wires for connecting the batteries 49 and 51 with the chassis unit 52 are thus entirely eliminated. The cover 66 is releasably locked in its closed position by a swing bolt 71 pivoted at 72 to the housing 40 and receivable within a slot 73 formed in a projection 74 on the cover 66. With the shank portion of the bolt 71 positioned within the slot 73, tightening of the nut 76 clamps the cover 66 against the open end 41 of the housing.

The chassis unit 52 is of a preassembled construction and is shown in Figs. 5 and 6 in actual size. The chassis unit 52 includes a frame member 95 of substantially L-shape integrally formed with a base portion 89 and a supporting portion 91. Carried in the supporting portion 91 and in a spaced relation longitudinally thereof are peanut vacuum tubes T1—T5, inclusive. Also carried on the supporting portion 91 and extending transversely of the base portion 89 is a first IF transformer L4 positioned intermediate the tubes T2 and T3, and a second IF transformer L5 arranged between the tubes T3 and

T4. The transformers L4 and L5 are of a similar construction, the windings in each thereof being wound on a powdered iron core and surrounded by a powdered iron sleeve to further increase their inductance. This type of construction gives a high inductance with a very small winding to provide in all an efficient transformer of small size. The primary and secondary windings of the transformers are tuned by small adjustable mica trimmers, indicated at 124 and contained within a metal shield can 126 for each transformer. Positioned intermediate the tubes T1 and T2 and extending transversely of the base portion 89 is an antenna coil L1 (Fig. 6) extending through and carried on the supporting portion 91 of the frame member 95 for the chassis unit 52. The antenna coil L1 is of a solenoid type and is wound on a polystyrene body portion 75.

The chassis unit 52 also includes a crystal M1 used when the set is operating as a receiver and a crystal M2 used when the set is operating as a transmitter (Figs. 5 and 6). The crystals M1 and M2 are of a similar construction and are contained in plug-in type holders carried in the base portion 89 near the end of the chassis unit 52. It is contemplated that each of the crystal holders be suitably marked to correspond with an associated crystal so as to minimize the possibility of the crystals M1 and M2 being interchanged during the assembly of the chassis unit. An AF choke L3 (Fig. 6) is carried in an insulating housing 133 connected to a bracket 134 supported on the supporting portion 91 and arranged in alignment with the crystals M1 and M2. The RF amplifier tank condenser C12 is also carried in the supporting portion 91 and is arranged between the superposed crystals M1 and M2 and the tube T1. Positioned adjacent the tube T5 and mounted on the base portion 89 is an inductance L6 which functions as an audio output reactor for receiving and as a modulation choke for transmitting. The elements L3, L6 and C12 will be further explained in connection with the description of the circuit diagram in Fig. 9.

In the operation of the combination radio receiver and transmitter set of this invention, it is contemplated that a group of the sets be used for intercommunication purposes at a particular frequency. In other words, the members of a particular group of operators who are to be in communication with each other, will have their sets tuned to the same frequency so that they can communicate with each other in the field without having to make any adjustments to their sets. In one embodiment of the invention, the combination set is adapted to operate over a frequency range of from 3500 to 6000 kc. Twelve antenna coils L1 are used to cover this frequency range, each antenna coil being marked to indicate the type of coil and the frequency range over which it is capable of operating. It is, of course, apparent that when a coil L1 in the antenna circuit is changed to provide for the operation of the set at a desired frequency that provision must be made for a corresponding frequency change in the RF circuits so that such two circuits may be tuned to resonance at the desired frequency. In accomplishing a tuning of the RF circuit in resonance with the antenna circuit, there is provided a variable permeability tuned inductance unit indicated as L2 (Fig. 6). In the above-mentioned commercial embodiment adapted for operating over a frequency range of from 3500 to 6000 kc., only six inductance units L2 are required to cover this entire frequency range. Along with the changing of the coil L1 and inductance unit L2 for operation at a particular frequency the crystals M1 and M2, of course, must also be changed. The relation of the crystals M1 and M2 for a specified frequency will be taken up hereinafter in connection with the circuit diagrams in Fig. 9. The operating frequency for the set is indicated on the card 50 (Fig. 3), previously noted.

In the operation of the set as either a transmitter or a receiver there is utilized an antenna 136 of telescopic or disappearing type which is assembled as a part of the chassis unit 52 (Fig. 6). The lower section 137 of the antenna 136 is slidably supported in a channel or U-shaped insulating member 138 extending longitudinally of the chassis unit 52. The end 139 of the channel member is supported in the end member 58 of the chassis unit. The opposite end 141 of the channel member 138 is supported on the antenna coil L1 by conductor means indicated generally as 142 and which will be later fully explained. The lower end of the antenna section 137 is provided with an insulating projection 144. The projection 144 is arranged within the open side of the channel member 138 and is slidable therein. The chassis unit is provided with a power switch 148 of toggle type having an actuating arm 149 of substantially L-shape projecting outwardly from the supporting portion 89. The cross arm portion 151 of the actuating arm 149 is of a substantially arcuate shape and is provided with laterally projecting extensions 152 and 153 at each end thereof. The projection 144 on the antenna section 137 is arranged intermediate the projections 152 and 153 so as to be selectively engageable with one of said projections on linear movement of the antenna section 137 in reversed directions. In the present invention the toggle switch 148 controls the supply of energy to the chassis unit 52 and hence to the set. When the antenna section 137 is in its position shown in Fig. 6 the actuating arm 149 is in a position for cutting off the supply of energy to the chassis unit 52, thereby rendering the set inoperative. On movement upwardly of the antenna section 137, as viewed in Fig. 6 the extension 144 engages the projection 153 and moves the actuating arm 149 upwardly to a position providing for the supply of energy to the chassis unit. On continued movement upwardly of the antenna section 137, the extension 144 is moved out of engagement with the projection 153 to permit the antenna section 137 being slidably moved outwardly from the channel member 138. On upward movement of the actuating arm, however, the projection 152 is moved into the path of movement of the extension 144, so that on a reversed movement of the antenna section 137 downwardly to its contracted position within the channel member 138 the extension 144 engages the projection 152 to return the actuating arm 149 to its position indicated in Fig. 6. It is seen, therefore, that the position of the antenna section 137 relative to the insulating member 138 indicates the control positions of the actuating arm 149.

A single control switch 192 assembled as a part of the chassis unit 52 is used to completely change over the operation of the combination set from its function as a receiver to a transmitter and vice versa. The switch 192 (Figs. 6 and 8) extends longitudinally of the chassis unit 52 and to one side thereof across the tubes T1–T5, inclusive. The switch 192 includes a stationary insulating

member 193 of flat form and a movable insulating member 194 also of flat form and arranged for linear movement relative to the stationary member 193. Extending in linear alignment and arranged in a spaced relation longitudinally of the stationary member 193, are contacts 196 having engaging fingers 197 and 198 (Fig. 4). As illustrated for the switch contact 196*a* in Fig. 8, the stationary member 193 is formed with an aperture 199 for receiving therein the finger portion 197 of the switch contact 196*a*. The finger portion 197 is thus retained substantially in the plane of the stationary member 193. It is to be understood, of course, that the above construction for the contact 196*a* is similar for all of the contacts 196.

The movable member 194 carries contacts 201 of substantially L-shape having a leg portion 202 extending through a corresponding slot 203 formed in the stationary member 193. The end 204 (Fig. 4) of the leg portion 202 is anchored in the movable member 194 so as to be retained in a fixed position thereon. A second leg portion 206 substantially normal to the leg portion 202 is projected laterally away from a corresponding slot 203 for positioning between the fingers 197 and 198 of corresponding contacts 196. By virtue of the finger 197 being substantially in the plane of the stationary member 193, the leg portions 206 are slidably supported for movement on the member 193 and through the finger portions 197 and 198 whereby to slidably support the movable member 194 on the stationary member 193. It is seen, therefore, that on linear movement of the movable member 194 relative to the stationary member 193 the contacts 201 are moved relative to corresponding contacts 196 to control the energization of the circuits associated with the contacts 196. Contacts on the stationary member 193 not engaged by any contacts 201 on the slidable member 193 are indicated at 200. These contacts 200 are merely the lugs for other circuit connections.

The operation of the switch 192 is manually controlled by a manually operated unit 207 operatively supported on the housing 40 and to the outside thereof (Fig. 4). The unit 207 includes toggle or extensible means 208 comprising a pair of members 209 and 211 of substantially arcuate shape which are pivotally connected together at their adjacent ends by axis means 212. The end 123 of the toggle member 211 is pivotally connected by axis means 214 with a bracket member 216 secured to the housing 40 by a screw or the like 217 so that the end 213 is in a fixed position relative to the housing 40. The end 218 of the toggle member 209 is pivotally connected by axis means 219 with a linearly movable member 221 which is slidably supported on the housing 40. The linear movement of the slidable member 221 is in the same direction as the linear movement of the movable member 194 of the switch 192, the member 221 having guiding rim portions 223 thereon for receiving a guiding member 224 secured by a screw 226 to the housing 40. On pressing the toggle means 208 toward the right, as viewed in Fig. 31, the pivotal connection 212 between the toggle members 209 and 211 is moved in an arcuate path which is substantially normal to the direction of linear movement of the slidable member 221 and hence to the direction of linear movement of the switch member 194. This movement of the toggle means 208 linearly moves the end 218 of the toggle member 209 to in turn move the slidable

member 221 in a linear direction. The position of the parts of the manually operated unit 207 when the toggle means is in a depressed condition is shown in dotted lines in Fig. 31. The movement of the pivotal connection 212 is limited by a cushioned bumper 227 carried on the housing 40 and secured thereto by the screw 217.

The slidable member 221 has an extension 228 thereon which extends through an opening 230 formed in the housing 40. This extension 228 is in abutting engagement with a projection 229 secured to the movable switch member 194 and extending laterally therefrom through a slot 231 formed in the stationary switch member 193. On movement of the pivotal connection 212 to the right, as viewed in Fig. 4, the extension 228 on the slidable member 221 is moved downwardly to in turn engage the projection 229 for movement therewith to their positions shown in dotted lines in Fig. 4. This downward movement of the projection 229 in turn linearly moves the movable member 194 in one direction relative to the stationary member 193 and hence the contacts 201 relative to the contacts 196 to control the radio circuits.

On release of the toggle means 208 the toggle member 211 is initially moved by a spring member 232 out of a binding position with the toggle member 209. The continued movement of the toggle means 208 to its unoperated position is accomplished by a tension spring 233 (Fig. 8) connected at one end to the stationary member 193 and at its opposite end to the movable member 194, the spring being partially positioned within a slot 234 formed in the stationary member 193. This action of the spring member 233 linearly moves the member 194 in an opposite direction relative to the member 193, with the engagement of the projection 229 with the extension 228 on the slidable member 221 returning the toggle means 208 to an idle position. When the manually operated unit 207 is in the position indicated in full lines in Fig. 4, the set is connected for operation as a receiver. With the toggle unit 207 in the position indicated in dotted lines in Fig. 4 the set is operated as a transmitter. It is seen, therefore, that changing the operation of the set from a transmitter to a receiver is automatically accomplished simply by releasing the operating unit 207 and that the set will operate as a transmitter so long as the unit 207 is retained in a depressed position. The change over from receiving to transmitting and vice versa is accomplished in a minimum of time and without any delay for making adjustments between the receiving and transmitting operations.

The flat arrangement of the change-over switch means 192 longitudinally of the chassis unit 52 and across one side of the tubes T1–T5, inclusive, provides for the contacts 196 and 201 corresponding to an associated tube being substantially adjacent such tube without projecting any appreciable distance laterally from the chassis unit 52. By virtue of a tube and its associated contacts being adjacent each other only very short leads or connections are required for connecting the contacts of the switch 192 into the tube circuits so as to substantially reduce the circuit losses resulting from long connections. A transparent insulating member 239 (Fig. 7) is arranged in a superposed relation with the switch unit 192 and is secured at each end thereof to the radio chassis 52. The transparent insulating member 239 is adapted to have ap-

plied thereon suitable markings, indicated as 241 (Fig. 6), to facilitate the assembly and checking of the tube circuits.

From a consideration of Figs. 5 and 6, it is seen that the chassis unit 52 is completely constructed as a preassembled unit which is of a substantially rectangular cross section over the entire length thereof. All of the resistor and condenser elements for the various tube and circuit arrangements, the antenna 136 and the change-over switch 192, are relatively arranged so as to be confined within a space defined substantially by the transverse and longitudinal dimensions of a tube and associated socket portion. The chassis unit, including the change-over switch 192 and the antenna 136, is thus adapted to be removed from or inserted within the housing 40 as a complete and compact package. In connection with the insertion of the chassis unit 52 within the housing compartment 48 it is seen from Fig. 4 that the projection 229 on the change-over switch 192 is moved adjacent the extension 228 on the slidable member 221. The extension 228 and the projection 229, therefore, do not in any way interfere with the assembly of the chassis unit 52 within the housing 40 and are completely operatively connected concurrently with the positioning of the chassis unit within the housing.

The operation of the set is best understood in connection with the circuit diagram in Fig. 9 which shows the complete circuit for the set. For the purpose of simplicity and clarity of description the change-over switch 192 will be considered as comprised of 14 section A–H, and J–O, both inclusive, and the parts of the control circuit will be described relative to their functions as controlled by these switch sections. It is to be understood of course that corresponding parts in all of the figures will be designated by like numerals of reference.

Referring to Fig. 9, the change-over switch 192 is shown in full lines in a position providing for the operation of the set as a receiver. In a receiving condition, the set acts as a five tube superheterodyne receiver consisting of one RF amplifier stage including the tube T1, one oscillator mixer stage including the tube T2, one IF amplifier stage including tube T3, one diode detector and first audio amplifier stage including tube T4, and one audio power output stage including the tube T5. With the change-over switch 192 in a position for receiving, the switch section A connects the crystal M1 across the grid 300 and the screen grid 301 of the tube T2. The connection of the crystal M1 in this manner provides the necessary coupling for oscil'ation. Section B connects a voltage divider V illustrated as comprised of three resistors across a resistor R4 to be later noted. This voltage divider V provides the grid bias voltage for the tubes T1, T2 and T5, the grids for these tubes being indicated at 302, 300 and 303', respectively. The switch section C connects the control grid 302 of the tube T1 into the AVC circuit of the diode detector tube T4.

Switch section D connects the antenna 136 to the tuning condenser C7. The section E connects the plate 304 of the tube T1 to the coupling condenser C10 of the signal grid 300 of tube T2. The switch section F connects the oscillator feed-back condenser C6 to ground. Section G puts the voltage dropping resistor R10 in series with the plate 304 of tube T1. Section H connects the "B" battery 51 to the plate 306 and screen grid 307 of the tube T3. The section H also connects the voltage dropping resistor R11 in series with the plate 308 of tube T5.

The section J of the change-over switch 192 functions to ground the microphone unit 63 when the set is utilized for receiving. The switch section K connects the terminal A of the filament 309 of the tube T3 to the "A" battery 49 and disconnects one section of the two-section filaments 311 and 312 in the tubes T1 and T5, respectively, from the "A" battery in a manner which will be later explained. The switch sections L and M are connected together electrically through contact 201' on the movable switch member 194 of the change-over switch 192. When contact 201' is in its receiving position shown in full lines in Fig. 9, the dropping resistor R16 is connected in series with the screen grid 313 of the tube T5. These switch sections L and M also place the dropping resistor R17 in series with the screen grid 314 and 301 of tubes T1 and T2, respectively, and connect the "B" battery 51 to the plate 304 of tube T1.

The sections N and O are electrically connected together through a second contact 201' of the change-over switch 192. The contacts 201' are substantially L-shaped, as shown in Fig. 8, for contact with two terminals 196 on the long portion and a single terminal 196 on the short portion thereof. These sections N and O place the earphone unit 62 across the audio choke L6 and the plate 308 of tube T5. The sections N and O also place the dropping resistor R19 in series with the earphone unit 62 to reduce the intensity of the signal in the earphone unit.

When the set is to be operated as a receiver the antenna 136 is series tuned by the mica trimmer C7. The signal voltage developed across C7 is amplified by the tube T1 and applied to the grid 300' of the tube T2. In the mixer oscillator tube T2, the incoming signal is mixed with the oscillator signal generated in the tube and produces a beat frequency plate current of 455 kc. The oscillator uses a crystal M1 in a crystal circuit, previously noted, and functions at 455 kc., above the carrier or incoming signal frequency. For a particular frequency at which the set is to be operated the receiver crystal M1, therefore, is 455 kc., higher in frequency than the transmitter crystal M2.

The beat frequency or IF signal produced in the mixer tube T2 is amplified by the tube T3 and is applied to the diode section 316 of the tube T4. Due to the detection process the modulated IF signal is demodulated, and an audio voltage is impressed across the resistor R20 which is the grid resistor of the pentode section, or grid 317, of the tube T4. The signal is then applied to the grid 303' of the tube T5, the power amplifier, where it is further amplified and then applied to the earphone unit 62.

The inductance or antenna coil L1 functions as a loading coil which aids in resonating the antenna 136. The grid resistor R2 of tube T1, provides a D. C. path for the bias voltage applied to the grid 302 of tube T1. The condenser C8 is an RF bypass for the circuit of the filament 311 of tube T1 and functions to reduce regeneration. The condenser C2 bypasses the RF current from the screen grid 314 of tube T1. Bypassing of this RF current by the condenser C2 is rendered more effective by the resistor R18 which increases the impedance of the path through the "B" battery 51. This arrangement is commonly called a decoupling filter. The resistor R18 also reduces the current flow in the

screen grid 314 of the tube T1. The permeability tuned inductance L2 provides the RF plate load for the tube T1 and is resonated by a capacity made up of the distributed capacity of the coil, the output capacity of the tube T1, the input capacity of the tube T2, and the capacity of the circuit wiring for such tubes.

A coupling filter for the circuit of the plate 304 of the tube T1 consists of the condenser C3 and resistor R10. The resistor R10 also serves to lower the D. C. plate voltage on the tube T1 which reduces its plate current and gives a more economical operation of the "B" battery. In other words the resistor R10 functions to decrease the current flow from the battery 51 through the plate 304 of tube T1 when the set is operating as a receiver.

The condenser C10 in the circuit of the grid 300 for the tube T2 functions as a coupling condenser for the passage of an RF current to the grid 300, but prevents any D. C. plate voltage from tube T1 reaching the grid 300, the resistor for grid 300 being R1. Resistors R3 and R4 provide the bias voltage for the grid 300 of the oscillator and mixer tube T2 as well as the bias voltage for the audio output tube T5. A D. C. voltage suitable for biasing purposes is produced across the resistors R3 and R4 because of the grid current which exists as a result of driving the oscillator grid 300 positive. The voltage divider V previously mentioned, provides the proper values of grid bias for the tubes T1, T2 and T3 when necessary to reduce regeneration.

A filter for the automatic volume control (AVC) applied to the grids 302, 300 and 303 of the tubes T1, T2, and T3, respectively, is comprised of condensers C13 and C14 and resistor R9. The AVC voltage is obtained from the detector load resistance made up of the resistors R13 and R14. The filter removes the audio component of the detector voltage from the D. C. component which is used for the AVC function.

The condensers C5 and C23 function as bypass condensers to prevent a voltage of the oscillator frequency getting into the control grids 302 and 303' of the tubes T1 and T5, respectively, through the bias system. The condenser C4 is a neutralizing condenser. It reduces the voltage of the oscillator frequency on the signal grid 300 of tube T2, due to coupling within the tube, by feeding back a voltage of the oscillator frequency out of phase with the internal coupled voltage. An RF choke L3 serves as a shunt feed arrangement for the screen grid 301 of tube T2 and further provides a low resistance path to the D. C. screen current and a high impedance path to the RF screen current. The condenser C11 and resistor R17 make up a decoupling filter for the screen circuit of tube T2.

The first IF transformer L4, is illustrated as composed of two coils 319 and 321 wound on iron cores and surrounded by an iron sleeve 322 to provide for the use of small coils of high inductance. The coils 319 and 321 are tuned by the trimmers C15 and C16, respectively. The resistor R8 which is contained within the iron shield 322 functions to broaden the response of the transformer. Condensers C17 and resistor R12 make up a decoupling filter for the screen grid 307 of the tube T3. A decoupling filter for the plate circuit of tube T3 is comprised of condenser C18 and the resistor R15. A second IF transformer L5 is comprised of primary and secondary coils 323 and 324, respectively, wound on corresponding iron cores and surrounded by an iron sleeve

326, a trimmer condenser C19 being used to tune the secondary winding.

The resistor R14 is the detector load across which the audio voltage is obtained. Resistor R13 in conjunction with condensers C20 and C21 make up a filter to remove the IF component from the audio component of the detector voltage. The condenser C22 couples the detector to grid 317 of tube T4 and prevents the D. C. component of the detector voltage from biasing this grid 317. The grid resistor R20 of the tube T4 has a resistance of 10 million ohms so that the small amount of grid current which exists in the tube T4 and flows through this resistor provides additional bias for this tube on large signal inputs. The condenser C25 is an IF bypass to eliminate any IF current which exists in the circuit of the plate 327 of tube T4 from getting into the audio plate load resistor R22 for the tube T5. The condenser C26 and resistor R21 make up a decoupling filter for the screen grid 328 of the tube T4. Resistor R22 is the plate load for the tube T4, and C27 is the coupling condenser.

Resistor R23 is the grid resistor of tube T5. The condenser C29 and resistors R24 and R16 serve as a decoupling filter for the screen grid 313 of the tube T5. The resistor R16 also helps reduce the current drain on the "B" battery 51 by lowering the voltage on the screen grid 313. A low resistance D. C. path for the plate current in tube T5 is provided by the audio choke L6 which also offers a high impedance path to the audio plate current. A decoupling filter for the plate 308 of the audio amplifying tube T5 is provided by the condenser C30 and resistor R11. The resistor R11 also serves as a dropping resistor to lower the voltage in the plate 308. A condenser C24 prevents the D. C. plate voltage from reaching the earphone unit 62.

The circuit for the filaments 311, 331, 309, 332 and 312 for the tubes T1–T5, inclusive, when the set is operating as a receiver is shown in Fig. 10. The filament terminals indicated as *x* and *y*, and the "A" battery terminal X*a* correspond to the like terminal references in Fig. 9. As previously mentioned the filaments 311 and 312 for tubes T1 and T5, respectively, are of two-section type, the filament 311 including sections 333 and 334, and the filament 312 including sections 336 and 337. With the switch section K in a position for a receiving operation of the set the single section filaments 331, 309, and 332, and only the filament sections 333 and 336 of filaments 311 and 312, respectively, are connected to terminal X*a* for receiving energy from the "A" battery 49, the circuit for the filament sections 334 and 337 being open at the switch K. By virtue of this arrangement of the filament circuit the drain on the "A" battery 49 is reduced for receiving operation when current requirements for efficient signal reception are less than the current requirements for efficient signal transmission. The energy of the "A" battery is thus conserved during receiving so as to be available for the increased requirements in transmitting.

Referring to Fig. 9 the positions of the switch sections A–H, and J–O, both inclusive, are shown in dotted lines in the positions they occupy when the set is operated as a transmitter. When the combination set is operating as a transmitter only four tubes are used, the IF amplifier tube T3 being eliminated. The tube T1 for transmitting acts as an RF power amplifier tube, the tube T2 as an oscillator, tube T4 as a microphone amplifier, and tube T5 as a modulator. Section A con-

nects the transmitter crystal M2 with the screen grid 301 of the oscillator tube T2 in a crystal circuit arrangement. The section B of the change-over switch 192 disconnects the voltage divider V which, when the set was being operated as a receiver, provided the grid bias voltage for the tubes T1 and T2 and T3. Switch C connects the control grid 302 of tube T1 to the grid leak resistor R6. The section D connects the antenna 136 to the plate 304 of the RF amplifier tube T1, while the switch section E connects the plate 304 to the RF amplifier tank condenser C12. The section F connects the condenser C6 to the oscillator grid 302' of the tube T2, and section G shorts out the resistor R10 from the plate 304 of the tube T1. Section H disconnects the "B" battery 51 from the plate 306 and screen grid 307 of the tube T3 and also shorts out the resistor R11 from the circuit of the plate 308 of the tube T5. The switch section J connects the microphone unit 63 to the grid 317 of the first audio amplifier tube T4. Section K operates to disconnect the filament 309 of the tube T3 from the "A" battery, and to connect the second sections 334 and 337 of the filaments 311 and 312 of tubes T1 and T5, respectively, with the "A" battery as will be later described in connection with Fig. 10.

The electrically connected sections L and M short the resistor R16 out of the circuit of the screen grid 313 of tube T5, and the resistor R17 out of the screen grid circuits of tubes T1 and T2. The connected switch sections N and O connect the screen and plate circuits of the RF amplifier tube T1 to the plate 308 of the modulator tube T5.

When the set is operating as a transmitter the RF carrier is generated in the oscillator section of the tube T2. The crystal M2 used for transmitting operates at a frequency which is 455 kc. lower than the frequency of the crystal M1 used when the set is operating as a receiver, as was previously noted. The generated RF signal is applied to the grid 302 of the tube T1 where it is amplified and fed into the antenna 136. The antenna is coupled to the amplifier tank or tuned circuit by an impedance matching network of the Pi type in which the capacity between the antenna rod and housing makes up one shunt branch. The microphone output is amplified by the pentode section 317 of tube T4 and then applied to the grid 303' of tube T5 where it is further amplified. The output of tube T5 is then fed into the plate circuit of tube T1 of the RF amplifier. It is to be noted that since the screen grid 314 of tube T1 is tied to the lower end of coil L2 that the modulating voltage is introduced into the screen grid circuit as well as the plate circuit. This arrangement improves the percentage and quality of modulation. The earphone unit 62 is also connected across the audio output so that the operator can hear what he is saying. This arrangement is referred to as a sidetone. When the tube T2 is operating in the transmitter circuit only the oscillator section thereof is utilized. The resistors R3 and R4 make up the grid leak which provides the bias voltage for the oscillator grid 302'. The D. C. voltage developed across R4 is used also for the grid bias for the modulator tube T5.

The RF choke L3 provides a shunt feed arrangement for the screen grid 301 of the oscillator tube T2, with the condenser C6 determining the amount of feed back to the grid. A circuit bypass for the screen grid 301 of tube T2 is provided by a condenser C11. Condenser C9

functions as a coupling condenser and provides a path for the RF current to the grid 302 of the RF power amplifier T1, but prevents the D. C. screen grid voltage from being applied to the grid 302. The resistor R6 is a grid leak and provides the bias voltage for the grid 302. An RF bypass for the screen grid 314 of tube T1 is provided by the condenser C2. The coil L2 serves as an RF amplifier tank coil and C12 as an RF amplifier tank condenser. The condenser C12 also acts as one branch of the Pi network connecting the antenna 136 to the amplifier tank. The capacity between the antenna rod and the housing acts as the other shunt branch of the Pi network. The antenna coil L1 is the series branch of the Pi network and serves as an antenna loading inductance. Condenser C3 is the RF bypass for the plate circuit of tube T1. In order to provide ready access to the plate current measurement necessary for tuning up the antenna stage properly there is provided a current jack 341 in the plate circuit of the tube T1.

The grid resistor R20 for the tube T4, also acts as a load resistor for the microphone unit 63. A decoupling filter for the screen grid 328 of tube T4 consists of the resistor R21 and condenser C26. Resistor R21 also serves to obtain the proper operating voltage on the screen grid, with the resistor R22 furnishing the plate load. Condenser C27 functions as a coupling condenser, and R23 as the grid resistor of the tube T5. The decoupling filter for the screen grid 313 of tube T5 is comprised of the condenser C29 and resistor R24. Condenser C28 produces a low impedance path around the modulator choke L6 for the current of the carrier frequency. This is necessary since the RF amplifier tank and modulator choke are connected in series. A low resistance path to the D. C. plate current of the modulator tube T5 and RF amplifier tube T1 is accomplished by the modulator choke L6 which offers a high impedance load to the audio frequency plate current of the modulator.

Overloading of the monitoring earphones is prevented by the resistor R19, since the audio output for modulating the RF amplifier is quite high. A condenser C24 removes the D. C. plate voltage of the tube T5 from the earphones, while condensers C31 and C11 are "B" battery bypasses. It is to be noted that the condensers C4, C13, C14, C23 and C25, and resistors R1, R9, R13, R14 and the resistors of the voltage divider V are without use when the set is operated as a transmitter, their functions when the set is operated as a receiver having been previously explained.

The circuit arrangement of the filaments 311, 331, 309, 332 and 312 for the tubes T1–T5, inclusive, for transmitter operation is apparent from Fig. 10, the switch K being in the dotted position. The filament 309 of the IF amplifier tube T3 is open at the switch K since this tube is not utilized for transmitting. However, the remaining filaments, including both sections of each of the filaments 311 and 312 are in series connection with the "A" battery so that tubes T1, T2, T4 and T5 are operated at maximum output for transmitter operation.

From a consideration of the above description and drawings, therefore, it is seen that the invention provides a combination radio receiver and transmitter set which is of a very compact construction, light in weight, and which is completely self-contained as to the antenna, source of energy supply, and all of the necessary operat-

ing component parts. In the commercial embodiment hereinbefore referred to, efficient communication is attained over distances of approximately one to five miles depending upon the ground resistance. All of the parts of the set are preassembled into a minimum number of complete units to provide for the individual assembly and removal of these units relative to the housing therefor as separate packages. These various preassembled units may be kept in stock and because of their being readily interchangeable in the housing, new units may be substituted in the complete set for those units requiring service work or adjustments thereon. The set is thus adapted for substantially continuous service. All of the parts included in the set are clearly indicated as to type, and means are provided for the assembly of these parts in only one position to assure their proper relative assembly. No tuning or adjustments are required for the sets while in service, and only a single switch is utilized for changing the set from transmitting to receiving and vice versa. Because of this simplicity in construction, assembly, and operation of the set, it may be readily operated efficiently by an unskilled operator. It is to be noted also that the combination set is immediately operative on turning on of the energy supply switch so that communications may be carried on while the operator is enroute to a destination or after he has arrived at such destination.

Although the invention has been described with specific reference to a particular embodiment thereof, it is to be understood that it is not to be so limited, since changes in the parts and in their relative arrangement can be made therein which are within the full intended scope of this invention as defined by the appended claims.

I claim:

1. A combined radio transmitting and receiving system comprising, a plurality of electron discharge tubes individually provided with cathodes, circuit means for interconnecting said tubes as a radio transmitting system, electrical means for energizing said cathodes of said tubes to heat the same for providing emission therefrom at a predetermined rate, and switching means coupled to said circuit means and to said electrical means for selectively changing the connection between said tubes to provide a radio receiving system, said switching means cooperating with said electrical means for reducing the heating energy supplied to said cathode of at least one of said tubes to thereby reduce the emission from said cathode of said one tube in response to operation of said switching means to condition said system for receiving.

2. A self contained radio transmitting and receiving device comprising a plurality of vacuum

tubes having cathodes, at least one of said tubes having a cathode including two separately energized sections, a source of current for said cathodes, circuit means for interconnecting said tubes and said source of current for operation thereof as a radio transmitter, and switching means coupled to said circuit means for changing the connection between said tubes to provide operation thereof as a radio receiver, said switching means connecting said source of current to both sections of said cathode of said one tube for operation of said device as a radio transmitter and connecting only one section of said cathode of said tube to said source of current when said switching means is operated for signal reception.

3. A combined radio transmitting and receiving system comprising, a plurality of electron discharge tubes individually provided with cathodes, circuit means for interconnecting said tubes as a radio transmitting system, said circuit means including a tuned circuit to determine the frequency of the signal transmitted, electrical means for energizing said cathodes of said tubes for heating the same and thereby providing emission therefrom at a predetermined rate, and a single switching means coupled to said circuit means for selectively changing the connection between said circuit means and said tubes to provide a radio receiving system and to increase the resonant frequency of said tuned circuit for signal reception, said switching means also being coupled to said electrical means and cooperating therewith to reduce the heating energy supplied to at least a portion of said cathodes and thereby reduce the emission thereof in response to operation of said switching means to condition said system for signal reception.

DONALD H. MITCHELL.

REFERENCES CITED

The following references are of record in the file of this patent:

UNITED STATES PATENTS

Number	Name	Date
1,735,344	White	Nov. 2, 1929
1,940,881	Ports	Dec. 26, 1933
1,973,298	Sloggett et al.	Sept. 11, 1934
2,018,569	Pettengill et al.	Oct. 22, 1935
2,106,159	Runge	Jan. 25, 1938
2,223,049	Reichle	Nov. 26, 1940
2,259,690	Hansen et al.	Oct. 21, 1941
2,288,214	Summers	June 30, 1942
2,317,547	McRae	Apr. 29, 1943

FOREIGN PATENTS

Number	Country	Date
430,408	Great Britain	June 18, 1935
470,366	Great Britain	Aug. 13, 1937
627,045	France	Jan. 3, 1938