July 25, 1950 J. O. MOORHEAD ET AL 2,516,236

SNAP SWITCH AND SNAP-ACTING ELEMENT THEREFOR

Filed Oct. 21, 1946

FIG.1.

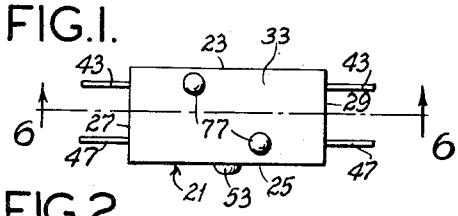

FIG.3.

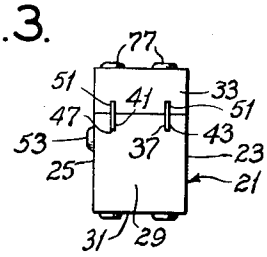

FIG.2.

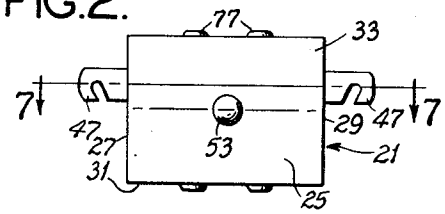

FIG.5.

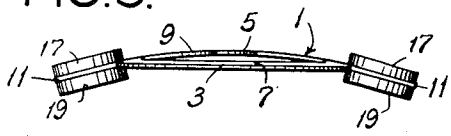

FIG.4.

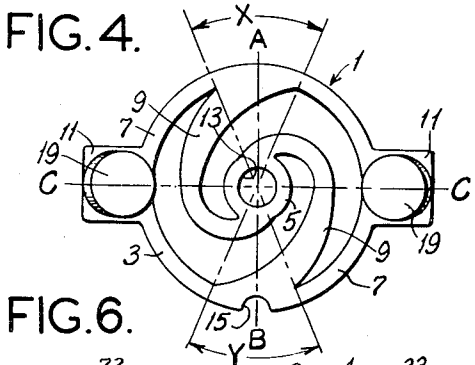

FIG.8.

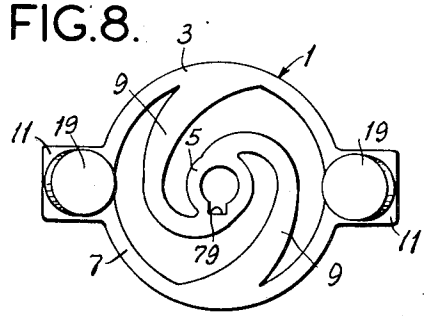

FIG.6.

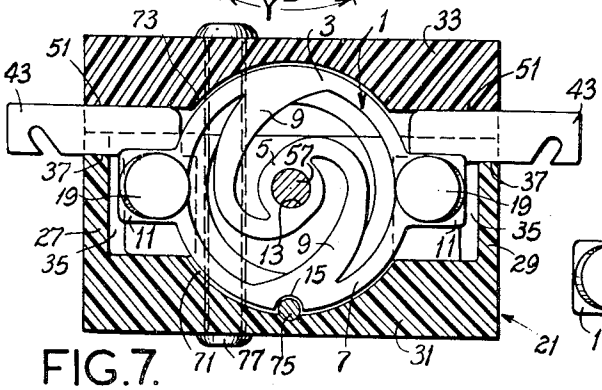

FIG.9.

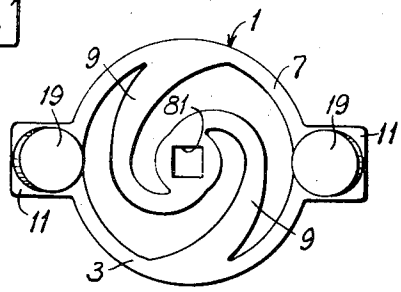

FIG.7.

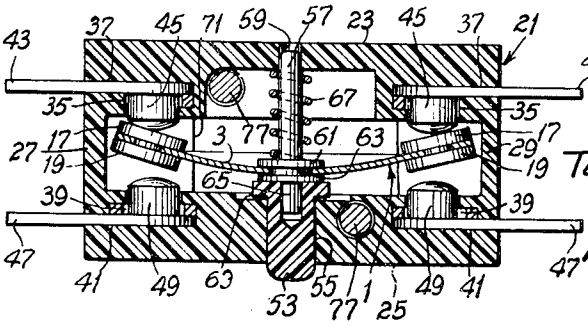

John O. Moorhead,
Townsend M. Gunn,
Inventors.
Haynes and Koenig,
Attorneys.

Patented July 25, 1950

2,516,236

UNITED STATES PATENT OFFICE

2,516,236

SNAP SWITCH AND SNAP-ACTING ELEMENT THEREFOR

John O. Moorhead and Townsend M. Gunn, Attleboro, Mass., assignors to Metals & Controls Corporation, Attleboro, Mass., a corporation of Massachusetts

Application October 21, 1946, Serial No. 704,548

4 Claims. (Cl. 200—67)

1

This invention relates to an improvement in snap-acting controls and snap-acting elements for such controls and, more particularly, to snap-acting switches and the like and snap-acting spring discs embodied in such switches.

Among the several objects of the invention may be noted the provision of an improved snap-acting element in the form of a spoked, dished spring disc which has more snap movement and less creep movement than prior snap-acting elements of this class of comparable dimensions; the provision of a snap-acting element of the class described which has a higher ratio of snap movement to total movement than prior snap-acting elements of this class; the provision of an improved snap-acting control, such as a switch, embodying the snap-acting element of this invention, wherein said element has a floating, low-friction mounting; and the provision of a simplified control of this class which is inexpensive to manufacture and reliable in operation. Other objects will be in part apparent and in part pointed out hereinafter.

The invention accordingly comprises the elements and combinations of elements, features of construction, and arrangements of parts which will be exemplified in the structures hereinafter described, and the scope of the application of which will be indicated in the following claims.

In the accompanying drawings, in which several of various possible embodiments of the invention are illustrated:

Fig. 1 is a plan view of a snap-acting switch of this invention;

Figs. 2 and 3 are side and right-end elevations of the switch of Fig. 1, respectively;

Fig. 4 is a plan view on an enlarged scale of the snap-acting spoked disc of this invention;

Fig. 5 is an elevation of the disc of Fig. 4;

Fig. 6 is an enlarged section through the switch of Fig. 1, taken on line 6—6 of Fig. 1;

Fig. 7 is an enlarged section taken on line 7—7 of Fig. 2;

Fig. 8 is a plan view of a modification of the snap-acting spoked disc; and,

Fig. 9 is a plan view of another modification of the snap-acting spoked disc.

Similar reference characters indicate corresponding parts throughout the several views of the drawings.

Referring now more particularly to Figs. 4 and 5, reference character 1 generally designates the improved snap-acting element of this invention. This element comprises a disc 3 formed of spring sheet material, preferably resilient sheet metal, and dished into the configuration of a non-developable surface, such as a portion of a spherical surface. The disc has a central hub portion 5, an annular rim 7 surrounding the hub, and non-radial spokes 9 joining the hub and rim, all preferably integrally formed from a single sheet

2

metal blank. The spokes have preferably said non-developable configuration and extend from the outer periphery of the hub to the inner peripheral edge of the rim.

The form of the spoke and its connections are important characteristics of this invention. The advantages of this invention, which will be particularly described, are attained by forming each spoke to radiate outward from an edge portion of the hub on one radius of the disc, curve around the hub, and merge with an edge portion of the inner periphery of the rim preferably on the substantially diametrically opposite radius of the disc, or at a region beyond that radius, so that it is of substantially greater length than the radial distance from the hub to the rim. This is preferably accomplished by forming each of the spokes of generally spiral shape, the spiral radiating from the outer periphery of the hub to the inner periphery of the rim, and subtending an angle of substantially not less than 180°. The angle subtended by the spiral spoke may, if desired, be less than 180°. If made less than 180°, the improved performance of the disc is somewhat lessened, but it will still retain many advantageous characteristics over the prior art discs.

As illustrated in Fig. 4, the disc is preferably formed with two spokes 9. Each spoke spirals outward from the hub on a radius A, curves around the hub, and merges with the inner periphery of the rim on radius B diametrically opposite radius A. The median spiral of the spoke thus subtends an angle of 180° between radii A and B. The width of each spoke preferably increases from the hub to the rim, but the width of the spoke at its integral connection with the rim should not subtend too much arc. For example, in the drawings the total arc of both spoke-and-rim connections is of the order of 90°, as indicated in Fig. 4 by the sum of the angles X and Y, which are each of about 45° value. This leaves a proper amount of free arc of the rim between spokes.

It is not essential that the spokes have the exact form of the common mathematically definable spirals, although these are within the invention. They may have a plurality of straight-line segments, a plurality of arcs of different radii, or both. The essential characteristic is that each spoke radiate from one side of the hub, curve around the hub, and merge with the rim approximately on the diametrically opposite side or beyond.

The above described snap-acting disc is preferably formed by blanking it out of a flat sheet of spring material and punching out interior portions thereof to form the spokes 9. The resultant flat blank is then deformed to the dished configuration illustrated in Fig. 5. The resultant dished disc is adapted to snap from this config-

uration of opposite curvature upon application of oppositely directed forces at its center and periphery, and to remain in the particular configuration to which it has been snapped upon release of said forces. For some applications it may be desirable to form the disc so that upon release of these forces, the disc will snap back to its original shape. This can be accomplished by giving the disc the proper dished conformation.

We have found that the above described disc has much more total relative movement between its center and its periphery than plain, unspoked discs and other prior art spoked discs of corresponding diameters. Also, the ratio of snap movement to total movement is much greater in the disc of this invention than in prior art discs. This means that there is substantially less initial creeping movement of the disc of this invention prior to its snapping from one configuration to the other. This makes it particularly suitable for use in snap-acting controls of small overall size where snap action over a considerable distance with minimum creep is desired, as for example in switches, where lack of creep is desirable to avoid arcing across the switch contacts.

To adapt the snap-acting element for use in a snap-acting switch, it is formed of electrically conductive material and with ears 11 extending radially outward on diametrically opposite sides of the disc. These ears are preferably aligned on a diameter C—C at right angles to the diameter A—B but may be placed at other points on the periphery of the disc without interfering with the desirable characteristics of this disc. A central circular aperture 13 is provided in the hub 5. A notch 15 is cut in the periphery of the disc for keying purposes to be described. Fixed in each ear 11 is a dual contact element providing a contact 17 on one side and a contact 19 on the other side of the ear.

Figs. 1–3, 6 and 7 illustrate a snap-acting switch embodying the above described snap-acting element 1 of this invention. The switch comprises a support in the form of a case 21 having side walls 23 and 25, end walls 27 and 29 and a bottom wall 31. The case is open at its top, a cover 33 being provided to enclose the switch mechanism. The side wall 23 is interiorly formed with recesses 35 adjacent the end walls. These recesses extend downward from the top of the case and open into the case. Side wall 23 is also formed with slots 37 in its top extending outward from the rear of the recesses 35. The side wall 25 is similarly formed with corresponding recesses 39 opposite recesses 35, and corresponding slots 41.

Received in each recess 35 and its slot 37 is a terminal and contact assembly comprising a flat, generally L-shaped terminal, one arm 43 of which is frictionally fitted in the slot 37, the other arm of which extends downward in the recess and carries a contact 45 at its lower end disposed in the recess. Received in each recess 39 and its slot 41 in side wall 25 is a similar terminal and contact assembly comprising a flat generally L-shaped terminal, one arm 47 of which is frictionally fitted in the slot 41, the other arm of which extends downward in the recess and carries a contact 49 at its lower end disposed in the recess. The contacts 45 and 49 project from the recesses into the case opposite one another and the terminals 43 and 47 project from the slot out of the ends of the case for attachment of conductors thereto. The terminals project to some extent above the top of the case 21 and their projecting portions are received in slots 51 formed in the cover 33.

A push button 53 is mounted for axial sliding movement in an aperture 55 in side wall 25 intermediate the end walls of the case. A stem 57 extends from the button through an aligned aperture 59 in the side wall 23 of the case. This stem is formed at its lower end (as viewed in Fig. 7) with an integral collar 61, a step portion 63 and a reduced-diameter extension 65 fitted in a bore in the inner end of the button. The hub 5 of the snap-acting element 1 of this invention is fitted on the step portion 63 between the collar 61 and a washer on the reduced extension 65.

A compression spring 67 surrounding stem 57 reacts from side wall 23 against collar 61 to bias the push button 53 to an outermost position determined by the engagement of a flange 69 formed on the inner end of the push button with side wall 25. This spring also biases the hub 5 of disc 3 against the inner end of the push button to cause the disc to assume the upwardly concave configuration illustrated in Fig. 7 when the button is in its outermost position. Under these conditions, contacts 17 on the disc engage contacts 45 so that a circuit is completed from one terminal 43 to the other through the disc. When button 53 is pushed in against the bias of spring 57, the hub 5 of the disc is forced inward to flatten out the disc until the hub overcenters, whereupon the disc snaps to the dished, downwardly concave configuration opposite to that of Fig. 7 with contacts 19 engaging contacts 49. This completes a circuit between terminals 47 through the disc 3.

The bottom wall 31 of the case and the cover are recessed, as indicated at 71 and 73, respectively, to accommodate the disc 3. Alignment of contacts 17 and 19 with contacts 45 and 49 is maintained by a pin 75 driven through bottom wall 31 and engaging in the notch 15 in the periphery of the disc 3. This prevents rotation of the disc. The cover 33 may be secured to the case 21 as by means of rivets 77 extending through aligned holes therein.

The operation of the switch will be clear from the above description. As the push button 53 is pressed in, the disc 3 rapidly snaps from the configuration of Fig. 7 to the opposite configuration and with very little creep, so as to disengage contacts 17 from contacts 45 and snap contacts 19 against contacts 49. This occurs in such a short interval as to minimize arcing across the contacts. When the button is released, spring 67 biases the disc back to the configuration of Fig. 7 to disengage contacts 19 from contacts 49 and snap contacts 17 against contacts 45 in like rapid manner. During the transition from one configuration to the other the disc floats within the case, being supported only at its center by its hub 5. There is very little friction on the disc to reduce the rapidity of snap movement apart from that of pin 75 on the periphery of the disc if this pin is actually in engagement therewith. This is an important feature, inasmuch as any frictional restraint upon snap movement of the disc as the push button is pressed in (or released) tends to increase creeping movement of the disc.

It will be understood that the pair of contacts 45 function as stops engageable with diametrically opposite portions of the rim 7 of the disc on one face of the disc for limiting axial movement of the rim in the upward direction as viewed in Fig. 7. Similarly, the pair of contacts 49 func-

tion as stops engageable with diametrically opposite portions of the rim of the disc on the other face of the disc for limiting axial movement of the rim in the downward direction as viewed in Fig. 7. It is contemplated that the switch may be a single-throw switch instead of a double-throw switch merely by eliminating electrical connections to one or the other pairs of contacts **45** and **49**. Under these conditions, one of the pairs of contacts functions merely as a stop means, without having any circuit making and breaking function.

Figs. 8 and 9 illustrate modifications of the snap-acting element **1** designed for non-rotatable mounting of the disc without employment of the pin **75** and the notch **15**, so as to practically entirely eliminate friction of the disc during its throw. In each of these modifications, notch **15** in the periphery of the disc is eliminated. In the Fig. 8 form, the central aperture in the hub of the disc is formed with a keyway **79** for engagement with a suitable key formed on the stem **57** to prevent rotation of the disc on the stem. In the Fig. 9 form, the central aperture **81**, instead of being round, is non-circular, for example square, and step portion **63** of the stem is correspondingly non-circular to prevent rotation of the disc on the stem. In the switch in which the disc of Figs. 8 or 9 is employed, suitable means for preventing rotation of the stem **57** is provided, as will be readily understood.

While the invention is disclosed herein particularly with reference to a double-throw push button switch, it will be understood that it is applicable to other types of switches and also to any type of control device wherein snap action is desired, such as valves and the like.

In view of the above, it will be seen that the several objects of the invention are achieved and other advantageous results attained.

As many changes could be made in the above constructions, without departing from the scope of the invention, it is intended that all matter contained in the above description or shown in the accompanying drawing shall be interpreted as illustrative and not in a limiting sense.

We claim:

1. A snap-acting element comprising a dished disc adapted to snap from one dished configuration to an opposite configuration upon application of opposed forces at its center and periphery, said disc comprising a central hub, an annular rim surrounding the hub, and spokes joining the hub and rim, each spoke extending substantially spirally from one edge portion of the hub to the edge portion of the inner periphery of the rim with its median line subtending an angle of substantially not less than 180°, the connection between each spoke and the rim being an integral one and the total arc of the integral connections of all spokes being of the order of 90°.

2. A snap-acting element comprising a disc of spring material dished into non-developable configuration and adapted to snap from one dished configuration to an opposite configuration upon application of opposed forces at its center and periphery, said disc comprising a central hub, an annular rim surrounding the hub, and only two spokes joining the hub and rim, each of said spokes being of generally spiral form extending from one edge portion of the hub to the diametrically opposite edge portion of the inner periphery of the rim, the regions of joinder of the spokes to the hub and rim being substantially aligned on a diameter of the disc, said disc being formed with ears projecting radially outward on diametrically opposite sides thereof, said ears being aligned on a diameter at right angles to the aforesaid diameter.

3. A snap-acting switch comprising a support, a switch-actuating stem carried by the support for axial movement, a first pair of contacts fixed on the support in substantially diametrically opposed relation with respect to the axis of the stem, a second pair of contacts fixed on the support opposed to and axially spaced from the contacts of the first pair, a dished snap-acting spring disc of electrically conductive material comprising a central hub, an annular rim, and non-radial spokes joining the hub and rim, and having oppositely facing contacts on diametrically opposite portions of the rim, said disc being mounted at its center on the stem with its contacts between the opposed contacts of said pairs, and a spring constantly biasing the stem in the direction of the second pair of fixed contacts to a retracted position wherein the disc in bowed toward the first pair of fixed contacts with the contacts on the adjacent face of the disc engaging said first pair of contacts, said stem being movable against the bias of the spring to press the hub of the disc inward thereby to cause the disc to snap to an oppositely bowed position with the contacts on the other face of the disc engaging said second pair of fixed contacts.

4. A snap-acting switch comprising a support, a switch-actuating stem carried by the support for axial movement, a first pair of stops fixed on the support in substantially diametrically opposed relation with respect to the axis of the stem, a second pair of stops fixed on the support opposed to and axially spaced from the stops of the first pair, one of said pairs of stops constituting electrical contacts, a dished snap-acting spring disc of electrically conductive material comprising a central hub, an annular rim, and non-radial spokes joining the hub and rim, said disc being mounted at its center on the stem with its rim between the opposed stops of said pairs, and a spring constantly biasing the stem in the direction of the second pair of fixed stops to a retracted position wherein the disc is bowed toward the first pair of fixed stops with the rim of the disc engaging said first pair of stops, said stem being movable against the bias of the spring to press the hub of the disc inward thereby to cause the disc to snap to an oppositely bowed position with the rim of the disc engaging said second pair of fixed contacts, the rim carrying a pair of electrical contacts engageable with the fixed stops constituting electrical contacts.

JOHN O. MOORHEAD.
TOWNSEND M. GUNN.

REFERENCES CITED

The following references are of record in the file of this patent:

UNITED STATES PATENTS

Number	Name	Date
155,979	Savoral	Oct. 13, 1874
1,883,249	Spencer	Oct. 18, 1932
1,939,286	Spencer	Dec. 12, 1933
1,972,172	Spencer	Sept. 4, 1934
2,335,888	Stilwell	Dec. 7, 1943
2,358,637	Hawk et al.	Sept. 19, 1944
2,360,128	Hausler	Oct. 10, 1944
2,368,193	Boynton	Jan. 30, 1945
2,424,527	Whyte et al.	July 22, 1947