May 16, 1950 H. C. OTIS, ET AL. 2,508,285

WELL TOOL

Filed April 28, 1945 3 Sheets-Sheet 1

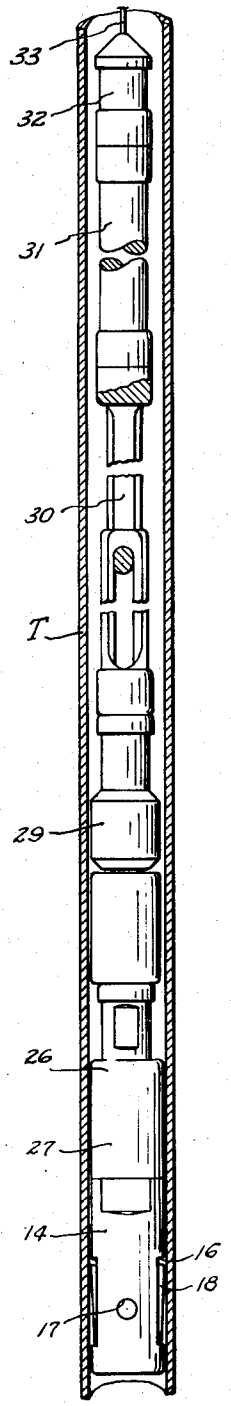

Fig. 1

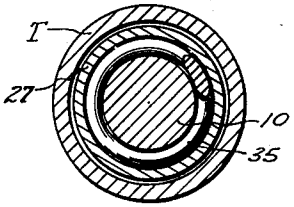

Fig. 3

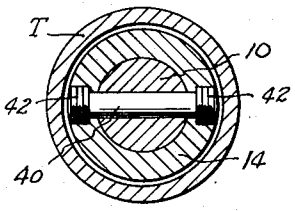

Fig. 4

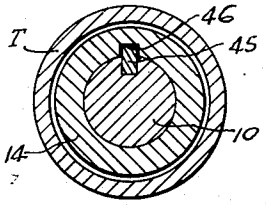

Fig. 5

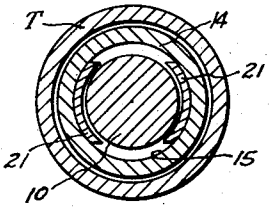

Fig. 6

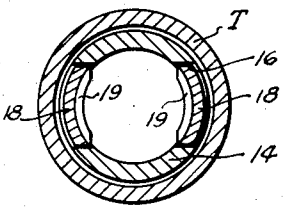

Fig. 7

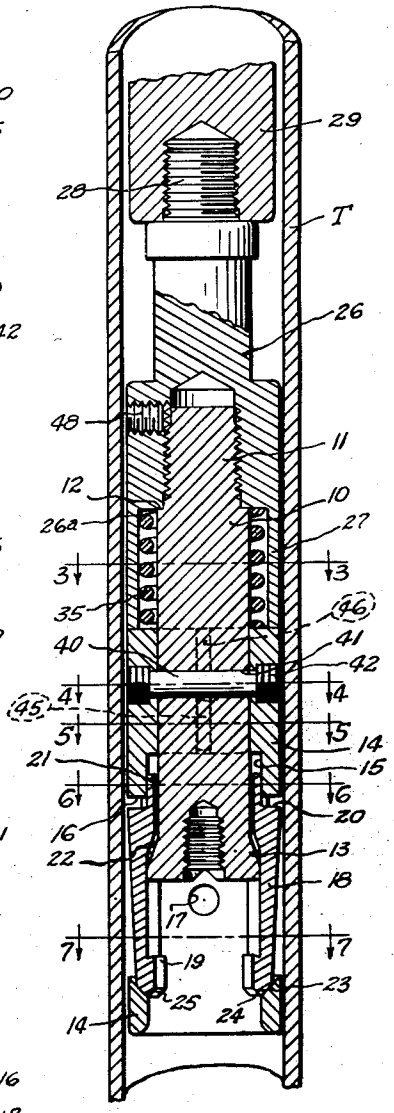

Fig. 2

Herbert C. Otis
Herbert C. Otis, Jr.
INVENTORS

BY Hastings & Ashley

ATTORNEY.

May 16, 1950 H. C. OTIS ET AL 2,508,285

WELL TOOL

Filed April 28, 1945 3 Sheets-Sheet 2

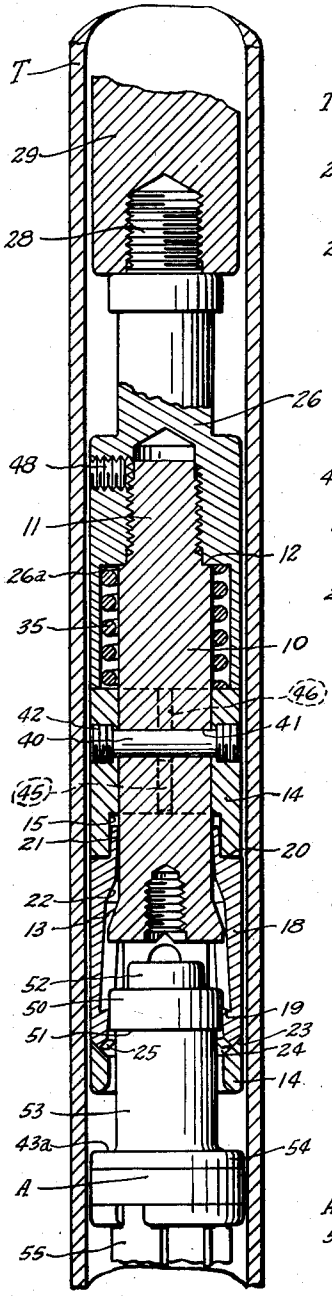

Fig. 8

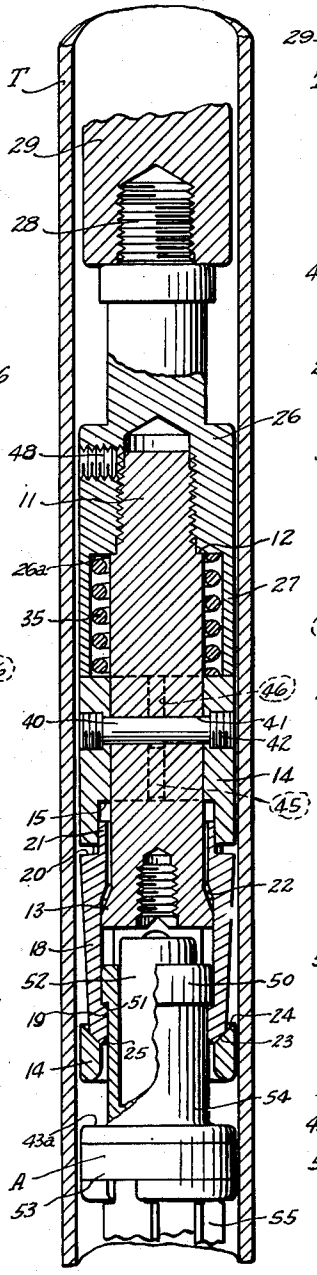

Fig. 9

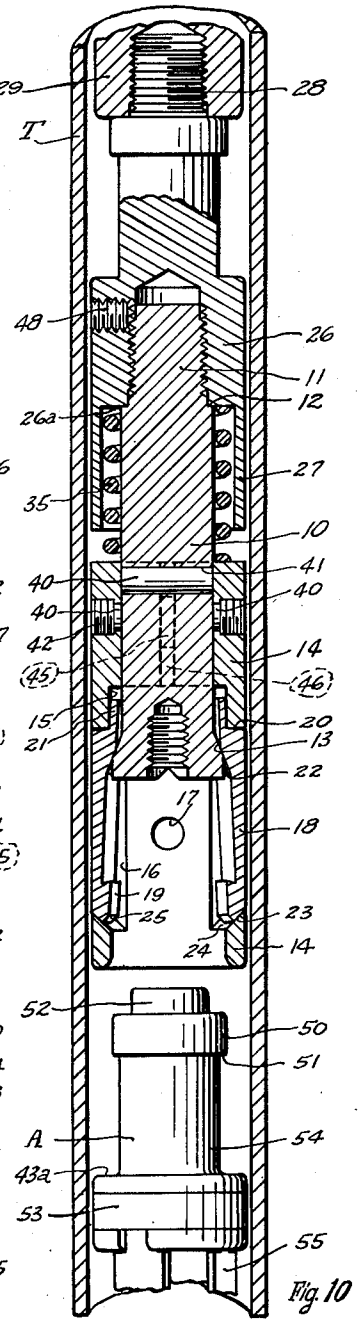

Fig. 10

Herbert C. Otis
Herbert C. Otis, Jr.
INVENTORS

BY Hopkins & Ackley

ATTORNEY.

May 16, 1950 H. C. OTIS ET AL 2,508,285

WELL TOOL

Filed April 28, 1945 3 Sheets-Sheet 3

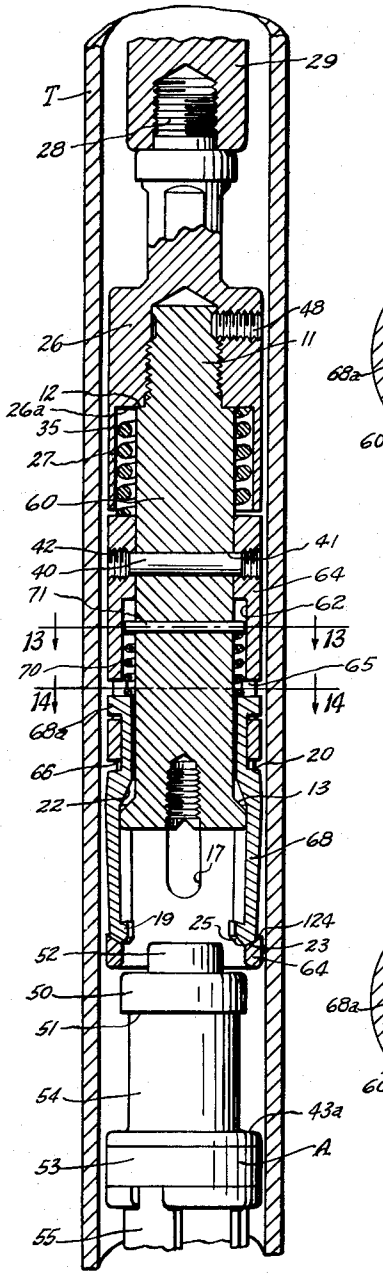

Fig. 11

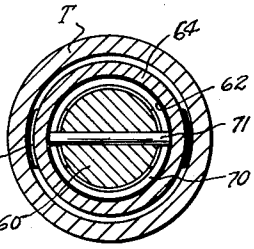

Fig. 13

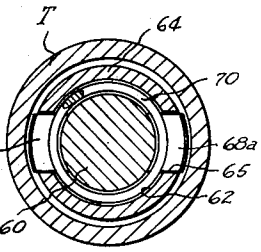

Fig. 14

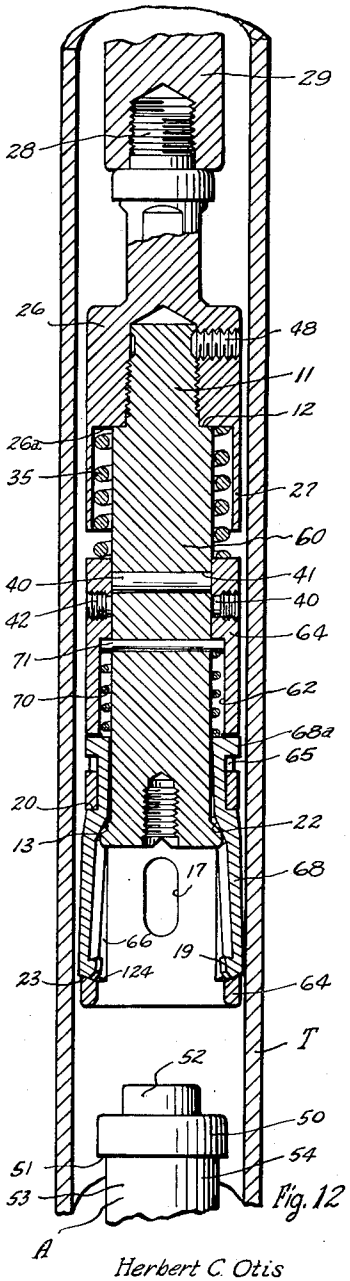

Fig. 12

Herbert C. Otis
Herbert C. Otis, Jr.
INVENTORS

BY Hastings Ashley

ATTORNEY.

Patented May 16, 1950 2,508,285

UNITED STATES PATENT OFFICE

2,508,285

WELL TOOL

Herbert C. Otis and Herbert C. Otis, Jr., Dallas, Tex.; Herbert C. Otis, Jr., assignor to Herbert C. Otis

Application April 28, 1945, Serial No. 590,832

11 Claims. (Cl. 294—86)

1

This invention relates to new and useful improvements in well tools.

One object of the invention is to provide an improved well tool which may be run into a well on a flexible line, such as a steel measuring line, and which is arranged to releasably engage a well device, whereby said tool may be utilized to run the well device into the well bore or to remove the same therefrom.

An important object of the invention is to provide an improved running tool having supporting means freely engageable with a well device for running such device into or out of the well, said supporting means being positively held in engaged position when engaging the well device, whereby possibility of disengagement of the tool from the well device during the running operation is reduced.

Another object of the invention is to provide an improved running tool wherein the supporting means is positively held in its engaged position, and wherein said supporting means is adapted to be moved to disengaged position upon movement of actuating means relative to said supporting means, said actuating means being normally releasably restrained from such movement.

It is a particular object of the invention to provide an improved tool for running into or out of a well conductor a well device having a mandrel and a gripping mechanism movable on said mandrel, said improved tool being adapted to engage the mandrel of the well device whereby force may be applied to said mandrel to release the gripping mchanism from gripping position, said tool also being adapted to engage and support the gripping mechanism to permit removal of the well device from the well conductor.

A further object of the invention is to provide an improved running tool of the character described, wherein the actuating means which moves the supporting element to disengaged position is automatically actuated upon release of the restraining means.

A still further object of the invention is to provide an improved running tool, of the character described, wherein the supporting means are normally urged toward engaging position, and wherein the means urging such supporting means to engaging position is rendered inoperative when the actuating means is moved to cause movement of the supporting means to disengaged position.

Yet another object of the invention is to provide a running tool of the character described wherein the means normally urging the dogs toward engaging position is adjustable.

2

Still another object of the invention is to provide in such a running tool means for causing positive motion of the supporting means to disengaged position when the actuating means is moved to cause disengagement of such supporting means.

Still another object of the invention is to provide an improved running tool of the character described, wherein the supporting element is itself supported, whereby the weight of the well device over which the running tool is engaged is not carried solely by the supporting element.

A still further object of the invention is to provide an improved running tool wherein the restraining means includes a frangible element which is fully enclosed within the tool, whereby when said element is fractured the pieces thereof can not fall into the bore of the well around the well device to interfere with the running thereof; said frangible element being adapted to fracture under a predetermined strain to release the tool from the well device.

Additional objects and advantages of the invention will be apparent from a reading of the following description of devices constructed in accordance with the invention, and reference to the accompanying drawings thereof, wherein:

Figure 1 is an elevation of a running tool, constructed in accordance with the invention, and showing the same being run into a well,

Figure 2 is an enlarged, transverse vertical sectional view of the tool in its running position,

Figures 3 through 7 are horizontal cross-sectional views taken on the lines 3—3, 4—4, 5—5, 6—6, 7—7 respectively of Figure 2,

Figure 8 is an enlarged, transverse vertical sectional view of the tool showing the same being engaged over the upper end of a well device,

Figure 9 is a view similar to Figure 8, showing the running tool engaged with the well device,

Figure 10 is a similar view, showing the supporting elements in disengaged or released position,

Figure 11 is a view partly in elevation and partly in section of a modified form of the running tool, showing the supporting elements in engaging position,

Figure 12 is a similar view showing the supporting elements of the modified form in disengaged or released position, and

Figures 13 and 14 are horizontal cross-sectional views taken on the lines 13—13 and 14—14 respectively of Figure 11.

In the drawings, the numeral 10 designates an elongate solid body or core which is substantially

cylindrical in cross section and which is provided with an upstanding externally screw-threaded pin 11 at its upper end. The pin is reduced in diameter relative to the external diameter of the core, whereby an external annular shoulder 12 is formed at the intersection of the body and the pin. The lower end of the core is formed with a flared substantially frusto-conical portion 13, having an external diameter greater than that of the rest of the core.

An elongate cylindrical sleeve member 14 is slidably mounted on the core 10, having the lower portion 15 of its bore enlarged to slide over the flared section 13 of the core. The sleeve is provided with a pair of diametrically opposed longitudinal slots 16 which extend substantially throughout the major portion of the length of the enlarged portion of the bore of said sleeve. In addition, said sleeve has by-pass ports 17 formed in its wall.

A pair of elongate supporting elements or dogs 18 are disposed diametrically opposite each other within the slots 16 in the sleeve, and are confined at their upper and lower ends between said sleeve and the enlarged lower portion of the core 10. Each dog has an upwardly facing hook or engaging element 19 formed on its inner lower end portion, while its upper end is provided with an external shoulder 20 and an upwardly extending arm 21 of reduced thickness, which is disposed above the tapered portion 13 of the core and adjacent the cylindrical portion thereof. Each arm extends upwardly into the annular space between the enlarged portion of the bore of the sleeve and the cylindrical portion of the core, so as to be loosely confined therebetween. Each dog is also provided with an inclined surface 22 on its upper inner portion below the shoulder 20 and this inclined surface is normally disposed above the tapered portion 13 of the core.

The lower end of each dog or supporting element is provided with a beveled surface 23 on its outer portion and is adapted to slide on a corresponding inwardly and downwardly extending inclined surface 24 formed at the lower end of the slot 16 in the sleeve, so as to be supported by said inclined surface. The lower inner end portion of each dog is also formed with a beveled portion 25 to permit the dog to slide readily over a well device, as will be hereinafter more fully explained.

It will be seen, therefore, that the supporting elements or dogs are movably confined within the slots 16, and that outward displacement of said dogs from the slots is prevented by the engagement of the arm 21 and the beveled lower end 23 of each dog with the sleeve 14 at the ends of the slots 16, while inward displacement of said dogs is prevented by the engagement of the inner portion of said dogs with the enlarged lower end of the core 10.

An elongate sub or connecting member 26, having a depending annular skirt 27, is threaded onto the pin 11 at the upper end of the core. The skirt 27 surrounds and is spaced from the upper cylindrical portion of the core, and is positively positioned longitudinally of the sub by the engagement of the sub with the shoulder 12 at the upper end of the core. The upper end of the sub is reduced in diameter and is connected, by means of a screw threaded pin 28, to a suitable raising and lowering mechanism, which may consist of a knuckle joint 29, link jars 30, a weight member or sinker bar 31, and a socket member 32 by means of which the assembly is

connected to a flexible steel measuring line or cable 33.

A helical coiled spring 35 is positioned in the annular space between the skirt 27 and the core 10 and has its ends engaging the upper end of the sleeve 14 and the underside 26*a* of the sub 26, as clearly shown in Figure 2. This spring tends to urge the sleeve 14 downwardly to the position shown in Figure 10, whereby the tapered surfaces 22 on the inner portion of the dogs 18 are engaged by the inclined section 13 of the core to move the lower ends of such dogs outwardly from engaged position. This swinging of the dogs outwardly from engaged position is facilitated by the pivoting action of the upright arms 21 and shoulder 20 of the dogs engaging the sleeve 14 at the upper end of the slot 16, as clearly shown in Figure 10.

For releasably holding the sleeve 14 in its uppermost position, shown in Figure 2, 8 and 9, wherein the dogs or supporting elements 18 are permitted to move to their engaging position, a frangible member or pin 40 is provided in a transverse hole 41 extending diametrically through both the sleeve 14 and the core 10, as shown in Figure 2. Headless set screws 42 are threaded into the sleeve 14 to hold the pin in the hole 41. Thus, when the pin 40 is sheared, as will be hereinafter explained, the sheared portions of the pin are prevented from falling out of the hole 41 by said set screws.

For preventing rotation of the sleeve 14 on the core 10 after the shear pin has been fractured, a key 45 which is securely fixed on the core 10 is slidable longitudinally within an elongate slot 46 formed in the upper portion of the sleeve. To prevent the sub 26 from becoming loosened on the core 10, a set screw 48 extends through the sub and engages the core.

In use, the tool is assembled as shown in Figure 2 and is connected to the lowering mechanism as illustrated in Figure 1, whereby it may be lowered into a well flow conductor T by means of the flexible steel line 33. It will be noted that with the sleeve 14 held in its normal position by the shear pin 40, as illustrated in Figure 2, the dogs 18 may each independently undergo a limited longitudinal movement in the slots 16, since the dogs are not connected together. In this position, the dogs 18 will normally move downwardly within the slots 16 to the position illustrated in Figure 2, the lower ends of said dogs, having the supporting elements or hooks 19 thereon, being urged inwardly into the bore of the sleeve 14 by the inclined surface 24 at the lower end of the slot. The sleeve 14 and the dogs may be passed downwardly over the flange 50 of a well device A which is to be lowered into or removed from the well tubing or flow conductor T. The flange 50 enters the bore of the sleeve and moves upwardly between the dogs so that the undercut annular shoulder 51 formed on the under side of said flange is moved above the hooks 19 of said dogs, whereby the well device is suspended from the tool. Since the flange 50 is rather closely confined against lateral movement within the sleeve 14, it is only necessary that the hook on one of the dogs engage under the shoulder 51 to suspend the well device, although engagement of both dogs is preferable. Furthermore, since the dogs are each movable independently of the other, should one of the dogs be rendered inactive for any reason, as by becoming stuck in an inoperative position by the presence of sand or other extraneous matter,

the other dog may nevertheless function to engage and support the well device.

Any suitable well device may be lowered or removed by means of the tool herein described, and the type shown includes a mandrel 52 having a slip assembly 53 slidably mounted thereon. The slip assembly includes a slip carrier 54 which is in the form of a sleeve slidable on the mandrel. The flange 56 is formed integral with the upper end of the slip carrier, whereby when the dogs are engaged with said flange the well device may be suspended from the dogs. Slips 55 are movably connected to and depend from the carrier, and are therefore movable to retracted position by the engagement of the dogs with the slip carrier.

When removing the well device from the well tubing, as shown in Figures 8 through 10, the sleeve and dogs of the tool are lowered over the upper end of the well device A, the bevel 25 on the inner lower ends of the dogs engaging the upper end of the flange 50 on the slip carrier and moving the dogs upwardly within the slots 16 to permit the hook elements 19 to move outwardly and down past said flange, as illustrated in Figure 8. It will be noted that, when the hook elements have moved below the flange 50, the lower end of the core of the tool will engage the mandrel 52 before the lower end of the sleeve 14 engages the enlarged flange 43*a* of the slip carrier. Thus, the mandrel may be driven downwardly to release the slips 55 connected to the slip carrier by downward blows imparted to the mandrel through the core 10. When the slips have been released, the hooks 19 on the dogs will engage under the flange 50, as shown in Figure 9, to permit lifting the slip carrier, slips and mandrel upwardly within the well tubing. In this position, the beveled lower ends 23 of the dogs engage and ride downwardly and inwardly on the inclined surfaces 24 at the lower ends of the slots 16 in the sleeve. Thus, positive engagement of the hooks 19 with the well device is assured.

It may sometimes occur that the well device A becomes stuck in the well tubing for some reason, whereby the slips 55 may not be retracted in the manner just described. In such event, the pulling tool may be released from its engagement with the slip carrier by jarring upwardly with the running mechanism to fracture the pin 40. When the pin has been sheared, the spring 35 will immediately move the sleeve 14 downwardly with relation to the core 10. This downward motion of the sleeve causes the upper ends of the slots 16 to engage the shoulders 20 on the dogs and move said dogs downwardly with respect to the core, whereby the tapered surfaces 22 on the inner side of the dogs are engaged by the inclined section 13 of the core, as shown in Figure 10, to swing the lower ends of such dogs outwardly from engagement with the flange 50 of the well device. In such position the hooks 19 on the dogs do not project into the bore of the sleeve 14 and the entire tool may be withdrawn from the well.

From the foregoing it will be seen that a well tool has been provided which has dogs or supporting elements thereon which are individually movable through a limited distance longitudinally within slots 16 formed in the sleeve 14, and which are normally urged inwardly toward engaging position by the inclined surfaces 24 at the lower end of the slots and the inclined bevel 23 on the lower ends of the dogs. These inclined surfaces

tend to hold the hooks 19 on the lower ends of the dogs in tight engagement with the retrieving connection, such as the flange 50, on the well device which is to be engaged by the tool. Any upward pull imparted to the sleeve will tend to move the hooks further inward to increase their gripping action on the flange and assure that engagement with such flange is maintained. Furthermore, the portion of the sleeve 14 below the inclined surfaces 24 provides additional support for the dogs 18, so that the entire weight of the well device is not carried by the dogs alone but by both the dogs and sleeve.

It will also be seen that the hooks are quickly and automatically moved to disengaged position when the shear pin 40 is fractured and the sleeve is moved downwardly with relation to the core 10 by the spring 35.

A modified form of the tool is illustrated in Figures 11 through 14. This form is provided with means for normally urging the dogs downwardly within the slots in the sleeve to assure their engagement under the flange 50 on the well device. It is also provided with means for positively retaining the dogs within the sleeve.

The sleeve 64 of this modified form is somewhat longer than the sleeve of the previous form, and openings or windows 65 are formed in the sleeve above the slots 66 in said sleeve. Dogs 68, similar to the dogs 18 of the previous form but having outwardly extending lugs 68*a* at their upper ends, are disposed within the slots 66 in the sleeve. The lugs 68*a* extend outwardly through the openings 65 in the sleeve.

A helical coiled spring 70 is positioned within the annular space between the enlarged bore 62 of the sleeve and the core 60 and is confined between the upper end of the dogs 68 and a transversely extending pin 71 mounted in said core and movable therewith in the enlarged bore 62 of the sleeve.

With the tool in the position shown in Figure 11, the pin 71 compresses the spring 70 and said spring urges the dogs 68 downwardly with respect to the slot 66 in the sleeve, thus causing the lower ends of the dogs to be moved inwardly on the inclined surface 124 at the lower end of said slot.

The core 60 of this modified form is also somewhat longer than that of the previous form. Other parts of the tool are the same as in the previously described form and bear the same numerals.

When the shear pin 40 has been sheared to permit the spring 35 to move the sleeve 64 downwardly with relation to the core 60, it will be seen that the downward motion of the sleeve causes the upper ends of the slots 66 to engage the shoulders 20 on the dogs and move said dogs downwardly with respect to the core, whereby the tapered surfaces 22 on the inner side of the dogs are engaged by the inclined section 13 of the core, as shown in Figure 12, to swing the lower end of such dogs outwardly from engaging position.

It will further be noted that such downward motion of the sleeve 64, and downward motion of the dogs 68 with respect to the core 60, releases the compression which has been put into the spring 70 by the pin 71, and thus said dogs may move upwardly with little or no opposing force being applied thereagainst by the spring 70. As a result, the spring 70 does not materially oppose the action of the spring 35 which urges the sleeve 64 downwardly to bring about movement of the dogs to non-engaging position.

The lugs 68a on the upper ends of the arms of the dogs, extending outwardly through the windows 65 in the sleeve, positively prevent longitudinal displacement of the dogs from their position within the slots 66 of the sleeve.

From the foregoing, it will be seen that a running and pulling tool for well devices has been provided which has dogs or supporting elements mounted thereon and normally urged inwardly toward engaging position for engaging a well device to be removed from or lowered into a well tubing. In this modified form, the dogs are resiliently urged toward their engaging position by the spring 70. Thus, the spring provides for positively urging the dogs to gripping position should such motion be retarded by the presence of sand or other extraneous matter, and is frequently necessary under such conditions. Further, the spring 70 is clearly rendered substantially ineffective upon downward motion of the sleeve 64 and dogs 68 with relation to the core 60, when the pin 40 is sheared to permit the dogs to be moved to non-engaging position. Otherwise, the operation of this form is the same as that of the form previously described.

The foregoing description of the invention is explanatory only, and changes in details of the constructions illustrated may be made by those skilled in the art, within the scope of the appended claims, without departing from the spirit of the invention.

What we claim and desire to secure by Letters Patent is:

1. A well tool including, an elongate core, a sleeve movable on said core and having an inclined surface thereon, supporting means carried by said sleeve and movable longitudinally and laterally with relation thereto, resilient means on said core normally urging said supporting means into engagement with the inclined surface on the sleeve for moving said supporting means into supporting position, and means on the core and sleeve for engaging the supporting means and moving said means to releasing position.

2. A well tool including, a body, supporting means movable with relation to said body, a sleeve movable on said body and having an inclined surface thereon, an abutment carried by the body, resilient means on said body confined between the abutment and supporting means for normally urging said supporting means into engagement with said inclined surface for moving said supporting means into supporting position, means on the body and sleeve for engaging the supporting means and moving said supporting means to releasing position upon movement of the body relative to the sleeve, such movement of the body relative to the sleeve also moving the abutment relative to the resilient means and supporting means to render said resilient means substantially inoperative when the supporting means is moved to releasing position.

3. A well tool for retrieving well devices having a mandrel and a gripping mechanism movable on the mandrel which includes, a body, supporting means movable with relation to the body, a sleeve movable on said body and having an inclined surface thereon, means normally urging said supporting means into engagement with the inclined surface for moving said supporting means into supporting position with respect to the gripping mechanism of the well device, and a downwardly facing surface on the lower end of the body for engaging the mandrel of the well device for applying downward force thereto.

4. A well tool for retrieving well devices having a mandrel and a gripping mechanism movable on the mandrel which includes, an elongate core, a sleeve movable on said core and having an inclined surface thereon, supporting means loosely confined between said core and sleeve and movable longitudinally and laterally with relation thereto, resilient means on said core normally urging said supporting means into engagement with the inclined surface on the sleeve for moving said supporting means into supporting position with respect to the gripping mechanism of the well device, and a downwardly facing surface at the lower end of the core for engaging the mandrel of the well device for applying a downward force thereto to release the gripping mechanism.

5. A well tool for retrieving well devices having a mandrel and a gripping mechanism movable on the mandrel which includes, an elongate core, a sleeve movable on said core and having an inclined surface thereon, supporting means loosely confined between said core and sleeve and movable longitudinally and laterally with relation thereto, resilient means on said core normally urging said supporting means into engagement with the inclined surface on the sleeve for moving said supporting means into supporting position with respect to the gripping mechanism of the well device, a downwardly facing surface on the lower end of the core for engaging the mandrel of the well device for applying a downward force thereto to release the gripping mechanism, and cooperating surfaces on the core and sleeve for engaging the supporting means and moving said supporting means to releasing position upon movement of said sleeve relative to the core, whereby the well tool may be disengaged from the well device sought to be retrieved.

6. A well tool including, a body, a sleeve movable on said body and having a depending skirt adapted to be placed over a well device, said sleeve having spaced longitudinal slots each terminating short of the bottom of the skirt and having an inclined surface at its lower end, supporting elements one disposed and movable in each of said slots and loosely confined between the body and sleeve so as to be each independently movable longitudinally and laterally with respect thereto and toward and from the inclined surface, engagement of said supporting elements with said surfaces normally urging said elements to engaging and supporting position, actuating means on the body for positively moving said supporting elements from supporting to non-supporting position, and releasable means for holding said actuating means in inoperative position.

7. A well tool including, a body, an elongate sleeve movable on and extending below said body, supporting dogs carried by said sleeve and loosely confined between said sleeve and body so as to be each independently movable longitudinally and laterally with relation thereto, said dogs extending below the lower end of the body and having inwardly directed hooks at their lower ends, means on said sleeve for engaging the lower ends of said dogs and moving them into supporting position upon upward movement of said sleeve relative to the dogs, a wedge surface on the lower end of the body for engaging the dogs intermediate their ends and swinging the lower ends of said dogs outwardly to releasing position upon upward movement of said body

with respect to said sleeve, and a releasable connection between said body and sleeve normally preventing such movement of the body with respect to the sleeve.

8. A well tool including, an elongate core, an elongate sleeve movable on said core and having a depending skirt, said sleeve having spaced longitudinally extending slots formed therein with an inclined surface at the lower end of each slot, supporting elements carried by the sleeve and each loosely confined at its upper end between said sleeve and core and having its lower end extending downwardly in one of the slots and movable longitudinally and laterally with relation to said core and sleeve, resilient means on the core within the sleeve engaging and normally urging said supporting elements longitudinally downwardly into engagement with the inclined surface at the lower end of the slots for moving the lower ends of said supporting elements into supporting position within the skirt, wedge means at the lower end of the core for engaging the supporting elements intermediate their ends to swing the lower ends of the supporting elements outwardly to releasing position on upward movement of the core with relation to the sleeve, and releasable means connecting the sleeve and core and normally restraining the core against movement relative to the sleeve.

9. A well tool including, an elongate core having an enlargement at its lower end, an elongate sleeve movable on the core and having a depending skirt, said sleeve having a plurality of spaced longitudinally extending elongate slots formed therein with an inclined surface at the lower end of said slots, elongate supporting dogs carried by the sleeve and each loosely confined at its upper end between said core and sleeve with its lower end extending downwardly in one of the slots and movable independently of the other dogs longitudinally and laterally with relation to said core and sleeve, a helical coiled spring carried by the core within the sleeve and confined between the upper ends of the dogs and an abutment carried by said core, said spring normally urging the dogs longitudinally downward into engagement with the inclined surface at the lower end of the slots for moving the lower ends of said dogs into supporting position in the sleeve, the enlargement at the lower end of the core being arranged to engage the dogs intermediate their ends upon upward movement of the core relative to the sleeve for causing the lower ends of the dogs to be swung outwardly to releasing position, resilient means on the core for causing relative movement of the core and sleeve, and a releasable connection between said core and sleeve for normally preventing such movement of the core and sleeve.

10. A well tool including, an elongate core member, a sleeve movable on and extending below the lower end of said core member, said sleeve having spaced longitudinally extending elongate slots formed therein, supporting elements each carried by said sleeve with its upper end loosely confined between the core and sleeve and having its lower portion extending downwardly in one of said slots, said supporting elements each being normally independently movable longitudinally and laterally with respect to said core and sleeve, a releasable connection between the core member and the sleeve for transmitting a lifting force from the core to the sleeve, wedge means on the sleeve at the lower end of the slots arranged to engage and move the lower ends of the supporting elements into supporting position with respect to an object to be lifted in a well bore in response to upward movement of said core with relation to the supporting elements, said core being movable upwardly with relation to the sleeve upon release of the releasable connection and having a flared section at its lower end arranged to engage the supporting elements intermediate their ends to move said supporting elements to releasing position, and means for causing such relative movement of the core and sleeve.

11. A well tool including, an elongate core having an enlargement at its lower end, an elongate sleeve movable on the core and having a depending skirt adapted to be placed over a well device, said sleeve having a plurality of spaced longitudinally extending elongate slots formed therein each terminating short of the bottom of the skirt and having an inclined surface at its lower end, elongate supporting dogs carried by said sleeve and each loosely confined at its upper end between said core and sleeve with its lower end extending downwardly in one of the slots and movable independently of the other dogs longitudinally and laterally with relation to said core and sleeve and toward and from the inclined surface at the lower end of the slot, a helical coiled spring carried by the core within the sleeve and confined between the upper ends of the dogs and an abutment carried by said core, said spring normally urging the dogs longitudinally downward into engagement with the inclined surface at the lower end of the slots for moving the lower ends of said dogs into supporting position in the sleeve, the enlargement at the lower end of the core being arranged to engage the dogs intermediate their ends upon upward movement of the core relative to the sleeve for causing the lower ends of the dogs to be swung outwardly to releasing position, such upward movement of the core also moving the abutment on the core upwardly with respect to the dogs and the spring to substantially release the compression of said spring to render said spring substantially inoperative to urge the dogs downwardly, and a releasable connection between the core and sleeve for normally preventing such movement of the core and sleeve.

HERBERT C. OTIS.
HERBERT C. OTIS, JR.

REFERENCES CITED

The following references are of record in the file of this patent:

UNITED STATES PATENTS

Number	Name	Date
1,555,811	Abercrombie et al.	Oct. 6, 1925
1,696,526	Crossen	Dec. 25, 1928
1,772,437	Henderson	Aug. 5, 1930
1,787,834	O'Bannon	Jan. 6, 1931
1,801,456	Pryor	Apr. 21, 1931
2,266,873	Lang	Dec. 23, 1941
2,348,563	Otis	May 9, 1944