April 4, 1950 B. F. TOFFLEMIRE 2,502,902

INTRAORAL FRACTURE AND ORTHODONTIC APPLIANCE

Filed Jan. 25, 1946 2 Sheets-Sheet 1

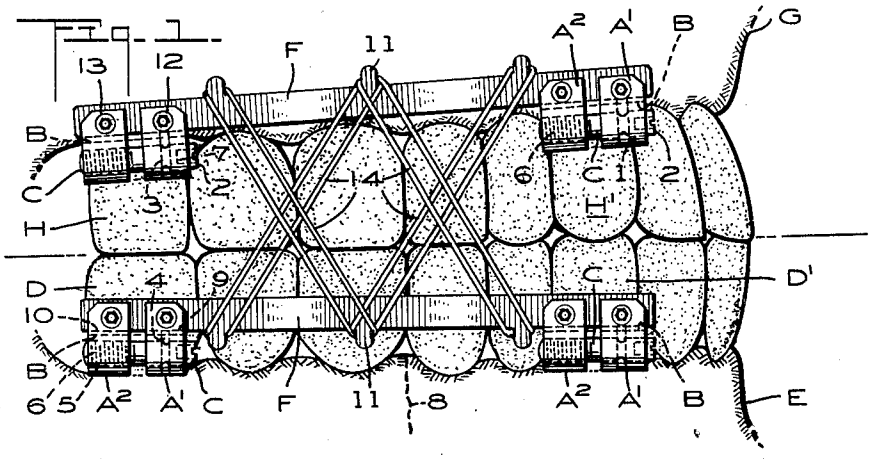

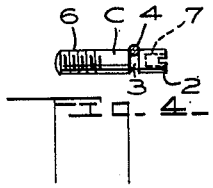

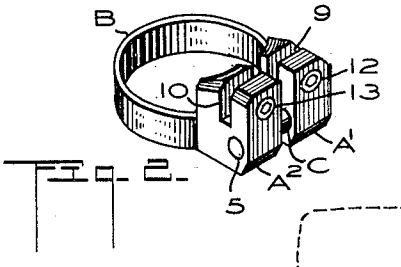

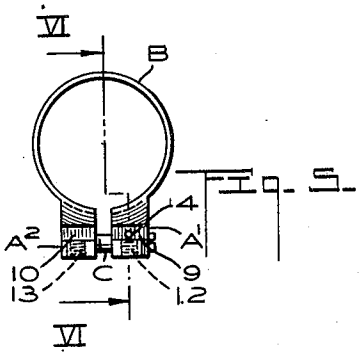

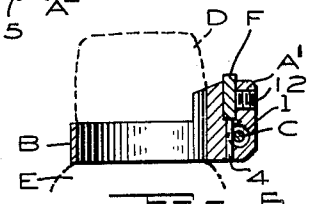

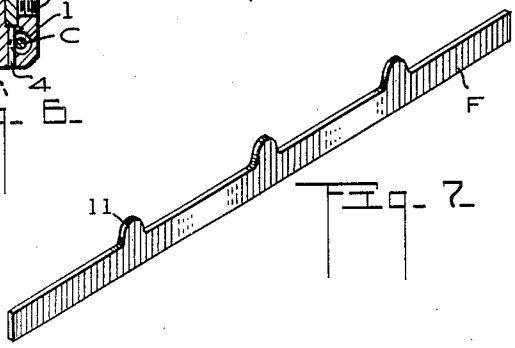

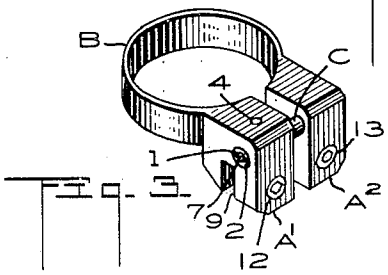

INVENTOR

BENJAMIN F. TOFFLEMIRE

BY

Munn, Liddy & Glascum.

ATTORNEYS

INTRAORAL FRACTURE AND ORTHODONTIC APPLIANCE

Filed Jan. 25, 1946 2 Sheets-Sheet 2

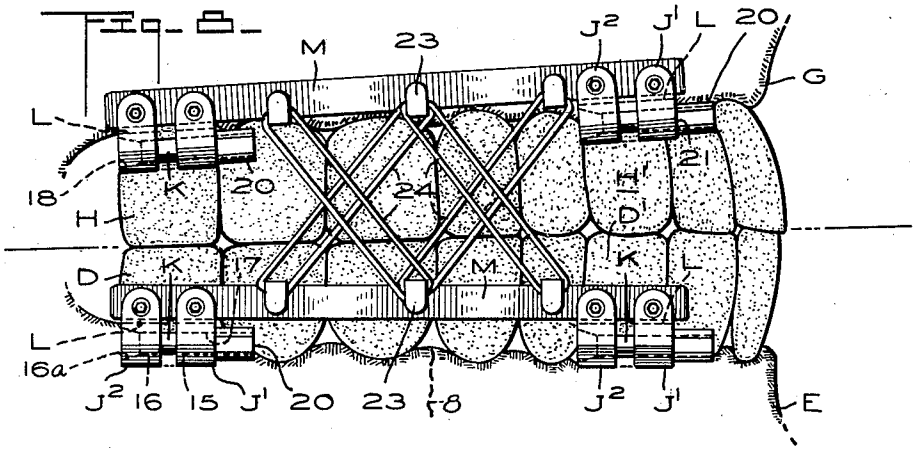

FIG. 8.

FIG. 11.

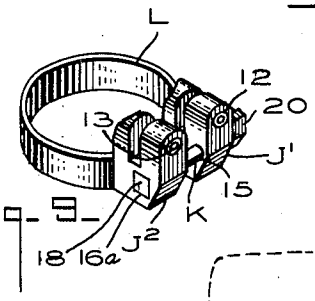

FIG. 9.

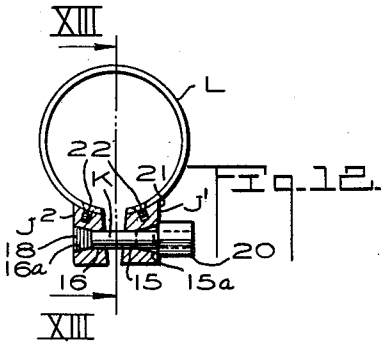

FIG. 12.

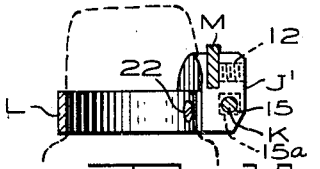

FIG. 13.

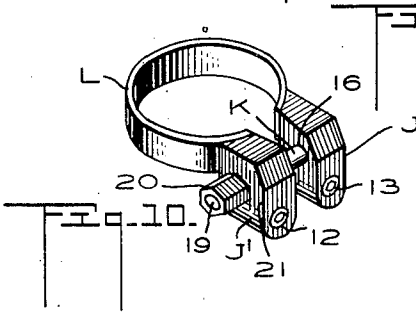

FIG. 10.

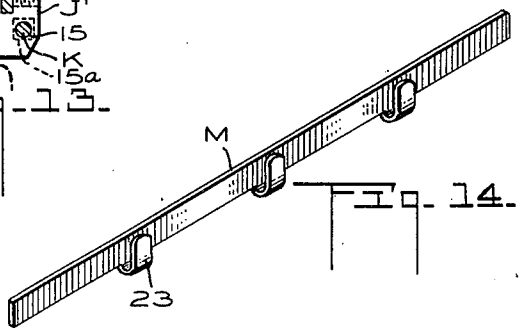

FIG. 14.

INVENTOR
BENJAMIN F. TOFFLEMIRE
BY
Munn, Liddy & Glascock
ATTORNEYS

Patented Apr. 4, 1950 2,502,902

UNITED STATES PATENT OFFICE

2,502,902

INTRAORAL FRACTURE AND ORTHODONTIC APPLIANCE

Benjamin F. Tofflemire, Lafayette, Calif.

Application January 25, 1946, Serial No. 643,279

5 Claims. (Cl. 128—92)

1

An object of my invention is to provide an intra-oral fracture and orthodontic appliance which is an improvement over the intra-oral fracture reduction appliance shown in my Patent No. 2,481,177, dated September 6, 1949. In the said patent, I show abutments secured to anchor teeth by wire staples and Allen-head set screws that have rounded ends for contacting directly with the teeth. The axes of the screws extend toward the patient's cheeks and this necessitates the use of the particular type of wrench shown in Figure 11 of said patent. The magnetized bit of this wrench extends at right angles to the wrench handle.

In the present invention, the abutments have attaching screws whose axes extend in the direction of the length of the mouth and the heads face toward the front of the mouth where they may be manipulated by a wrench whose bit axis coincides with the axis of the wrench handle. This construction makes it easier to attach the abutments to the anchor teeth.

A further object of my invention is to provide a device of the type described in which the abutment and tooth-engaging band are made integral or connectible to each other by screws, to facilitate anchoring the abutment to the tooth. The abutment is formed into two halves, each half being permanently secured to an end of the tooth-engaging band. The two halves may be drawn together by a screw after the band has been slipped around a tooth and the screw will tighten the band on the tooth so the abutment will be rigidly connected thereto. This does away with the screw that abuts the tooth as shown in said patent. The intra-oral jaw fracture appliance is readily applied to the jaw and easy to adjust. It may be used with equal facility and efficiency in the field of orthodontic adjustment and retention as well as in jaw fracture work.

The invention differs from said patent in that it is especially designed to take care of the isolated, displaced and anatomically inaccessible teeth that have hitherto been so difficult to control. These teeth are often firmly anchored to a fragment of viable bone and are consequently of considerable potential value in the reduction and fixation of the involved fragments. With my present device, it is merely necessary to slip the adjustable band over the desired tooth and tighten the band by rotating the spanner bolt. Where other teeth are more ready of access, the fixation blocks or abutments shown in said patent can be used since they are interchangeable with the abutments set forth in the present case.

2

Other objects and advantages will appear in the following specification, and the novel features of the device will be particularly pointed out in the appended claims.

My invention is illustrated in the accompanying drawings forming a part of this application, in which:

Figure 1 is a side elevation of the upper end lower jaw showing my abutments and bars operatively applied thereto and interconnected by elastic bands;

Figure 2 is an isometric view of the abutment and the band;

Figure 3 is a view showing the abutment and band in an inverted position from that shown in Figure 2;

Figure 4 is a side elevation of the spanner screw and shows a retaining pin in section;

Figure 5 is a top plan view of the combined abutment and band;

Figure 6 is a transverse section taken along the line VI—VI of Figure 5;

Figure 7 is an isometric view of an arch bar used in connection with the abutments;

Figure 8 is a view similar to Figure 1 and illustrates a modified form of abutment and arch bar;

Figure 9 is an isometric view of the modified abutment and band;

Figure 10 is an isometric view of the combined abutment and band, these being shown inverted from that illustrated in Figure 9;

Figure 11 is a side elevation of the spanner bolt;

Figure 12 is a top plan view of the combined abutment and band, the abutment being shown in section to illustrate the spanner bolt;

Figure 13 is a transverse section taken along the line XIII—XIII of Figure 12, and

Figure 14 is an isometric view of a modified form of arch bar.

While I have shown only the preferred forms of my invention, it should be understood that various changes or modifications may be made within the scope of the appended claims without departing from the spirit and scope of the invention.

In carrying out my invention, I provide an abutment composed of two halves indicated generally at A1 and A2. A band B has its ends permanently connected to the abutment halves as illustrated in Figures 5 and 6. The abutment half A1 has a bore 1 therein for rotatably receiving the head 2 of a spanner screw shown at C in Figure 4. The spanner screw has an annular

groove 3 formed therein and this groove slidably receives a pin 4 which is inserted in the abutment half A1, as clearly shown in Figure 6.

The other abutment half A2 has a threaded bore 5 therein and this bore receives the threaded end 6 of the spanner screw C. The head 2 of the screw C is of the Allen-head type, which means that the head has a non-circular recess 7 therein, see Figure 3, for receiving a non-circular bit. A rotation of the Allen-head screw C in one direction will draw the two abutment halves A1 and A2 toward each other and an opposite rotation will move them away from each other.

Figure 6 shows the band B slipped over an anchor tooth D. A tightening of the band B about the tooth is accomplished by rotating the Allen-head screw C. It will be noted from Figure 1 that the heads of the Allen-head screws C face toward the front of the mouth and this permits the screws to be readily rotated in a direction for tightening the bands about the anchor teeth, or for loosening them. Figure 1 shows the lower jaw E fractured at 8. One of the combined abutments and bands is secured to the anchor tooth D disposed on one side of the fracture and another combined abutment and band is secured to a second anchor tooth D′ disposed on the other side of the fracture. Each abutment half A1 and A2 has aligned grooves 9 and 10, respectively, therein, and these grooves receive an arch bar shown at F in Figure 1. The arch bar has integral fingers 11 extending from one edge as clearly shown in Figure 7, and the bar is mounted in the grooves 9 and 10 of the two abutments so that the fingers 11 will extend downwardly.

The arch bar is securely clamped in the grooves 9 and 10 by Allen-head set screws 12 and 13, see Figures 2 and 6. With this construction the arch bar is rigidly secured to the anchor teeth and will hold the two ends of the broken jaw in proper registration so that healing will be rapid.

Figure 1 shows the upper jaw G provided with combined abutments and bands rigidly secured to anchor teeth H and H′. In this instance, the grooves 9 and 10 face upwardly and receive a second arch bar F whose fingers 11 also face upwardly. Elastic bands 14 are connected to the fingers of the two arch bars F and extend in diagonal directions so as to urge the teeth of the lower and upper jaws into the proper occlusal plane.

In Figures 8 to 14, inclusive, I show a slightly modified form of the invention. In this form of the device the abutment halves J1 and J2 are provided with bores 15 and 16, respectively, that have non-circular and tapered recesses 15*a* and 16*a*, respectively. A spanner bolt K of the shape shown in Figure 11 has its shank 17 received in the bores 15 and 16 and its non-circular and tapered head 18 snugly received in the recess 16*a*. A threaded end 19 of the shank receives an elongated non-circular nut 20 and Figure 12 shows the nut bearing against the face 21 of the abutment J1 rather than being received in the recess 15*a*.

The purpose of the modified form of abutment is to permit the abutment and band L to be attached to anchor teeth on either side of the upper or lower jaws as shown in Figure 8. Either abutment half J1 or J2 may face forwardly when the device is attached to the anchor teeth and the spanner bolt K is fed through the aligned bores 15 and 16 so that the nut 20 will face toward the front of the mouth where it may be readily

manipulated for tightening the abutment to the anchor teeth or for freeing it therefrom. Either abutment half can receive the spanner bolt head and this is the principal difference between the modified form and the form shown in Figures 1 to 7, inclusive. Figure 8 shows the abutments extending in the same direction even though attached to the teeth of the upper and lower jaws. If additional elastic tension is desired, the abutments on the teeth of the lower jaw may be turned upside down so the lower arch bar M will be disposed a greater distance from the upper arch bar M, than shown. The elastics 24 will be stretched to a greater degree. The bolts K on the lower abutments can be reversed so the nuts 20 will face forwardly.

It is also possible to do away with soldering the band to the abutment halves. I have shown in Figure 12 how the ends of the band L may be secured to the abutment halves by screws 22 or other suitable fastening means. This will permit a continuous stainless steel matrix band material, as now procurable on the market, to be used at the discretion of the operator. The band material may be cut into suitable lengths and then secured to the abutment halves by set screws. If additional rigidity is desired, the abutment halves may have grooves therein for receiving the ends of the band and then Allen-head set screws can be used for securing the band ends in the grooves.

The arch bars M shown in Figures 8 to 14, inclusive, have their integral fingers 23 bent into the shape of hooks. The hook-shaped fingers 23 receive elastic bands 24 that urge the teeth of the upper and lower jaws toward the occlusal plane. The arch bars are slid into the slots of the fixation blocks or abutments and the parts are brought into normal, functional relationship and occlusion before tightening the Allen-head set screws which immobilize the fracture arch bars and keep all structures in their normal position during the healing process.

For those cases requiring gradual elastic reduction, one of the set screws is left in a loosened state until after the rubber bands have brought the fragments into position. It then is merely necessary to tighten the Allen-head set screw in order to lock the parts in their normal state. The arch bar serves as an alignment bar in the case just cited, yet permits movement in an anteroposterior plane, aided by the steady and gradual elastic traction of the rubber bands. Elastic traction is needed in those cases where it is necessary to induce muscle fatigue and overcome trismus and antagonistic displacement. Then, too, it is very effective on those cases that have gone untreated for some time, resulting in a temporary callus being established between the displaced fragments.

Figure 6 shows the pin 4 received in an opening that terminates in the bottom of the groove 9 in the half A′. It is possible with this construction to remove the pin if necessary so as to free the screw C and permit it to be fixed or a new one substituted.

I claim:

1. In combination, a fixation block formed of two halves, a tooth encircling band having its ends secured to the halves, the halves having aligned bores, a spanner screw rotatably received in the bores, said screw having a head with an annular groove disposed near the head, a pin carried by one of the halves and being slidably received in the groove for preventing longitudi-

nal movement of the screw with respect to the half, the bore in the half not provided with the pin being threaded, said screw having a threaded portion received in the threaded bore.

2. In combination, a fixation block formed of two halves, a tooth encircling band having its ends secured to the halves, the halves having aligned bores, a spanner screw rotatably received in the bores, said screw having a head with an annular groove disposed near the head, a pin carried by one of the halves and being slidably received in the groove for preventing longitudinal movement of the screw with respect to the half, the bore in the half not provided with the pin being threaded, said screw having a threaded portion received in the threaded bore, said halves having aligned arch bar receiving grooves, the pin terminating at the bottom of one of the grooves, whereby the pin may be readily removed.

3. In combination, a fixation block formed of two halves, a tooth encircling band having its ends secured to the halves, the halves having aligned bores, a spanner screw rotatably received in the bores, said screw having a head with an annular groove disposed near the head, a pin carried by one of the halves and being slidably received in the groove for preventing longitudinal movement of the screw with respect to the half, the bore in the half not provided with the pin being threaded, said screw having a threaded portion received in the threaded bore, said halves having aligned arch bar receiving grooves, an arch bar receivable in the grooves, and clamping screws carried by the halves for securing the arch bar rigidly to the halves, said arch bar having integral fingers for receiving rubber bands.

4. In combination, a fixation block formed of two halves, a tooth-encircling band having its ends removably secured to the halves, the halves

having aligned bores with tapered non-circular recesses, a spanner bolt receivable in the bores and having a tapered non-circular head snugly received in one of the recesses for preventing rotation of the bolt, and a nut screwed upon the threaded portion of the bolt and contacting the half not receiving the bolt head, whereby a rotation of the nut in one direction will tighten the band and block rigidly to a tooth.

5. In combination, a fixation block formed of two halves, a tooth-encircling band having its ends removably secured to the halves, the halves having aligned bores with tapered non-circular recesses, a spanner bolt receivable in the bores and having a tapered non-circular head snugly received in one of the recesses for preventing rotation of the bolt, a nut screwed upon the threaded portion of the bolt and contacting the half not receiving the bolt head, whereby a rotation of the nut in one direction will tighten the band and block rigidly to a tooth, said halves having aligned arch bar receiving grooves, an arch bar receivable in the grooves, and clamping screws carried by the halves for securing the arch bar rigidly to the halves, said arch bar having integral hook-shaped fingers for receiving rubber bands.

BENJAMIN F. TOFFLEMIRE.

REFERENCES CITED

The following references are of record in the file of this patent:

UNITED STATES PATENTS

Number	Name	Date
1,114,624	Meier	Oct. 20, 1914
1,471,785	Fernald	Oct. 23, 1923
1,638,006	Aderer	Aug. 9, 1927
2,379,011	Laskin	June 26, 1945