Dec. 21, 1948. H. W. JONES 2,456,784

BLOWPIPE APPARATUS

Filed March 9, 1944

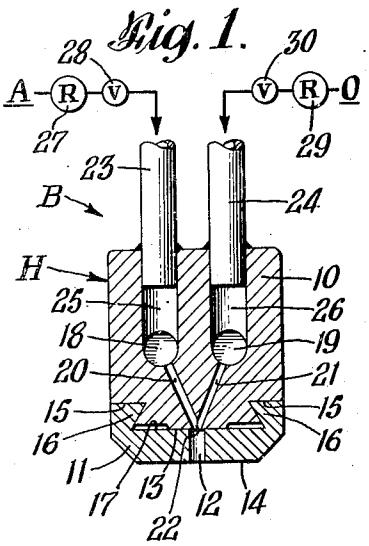

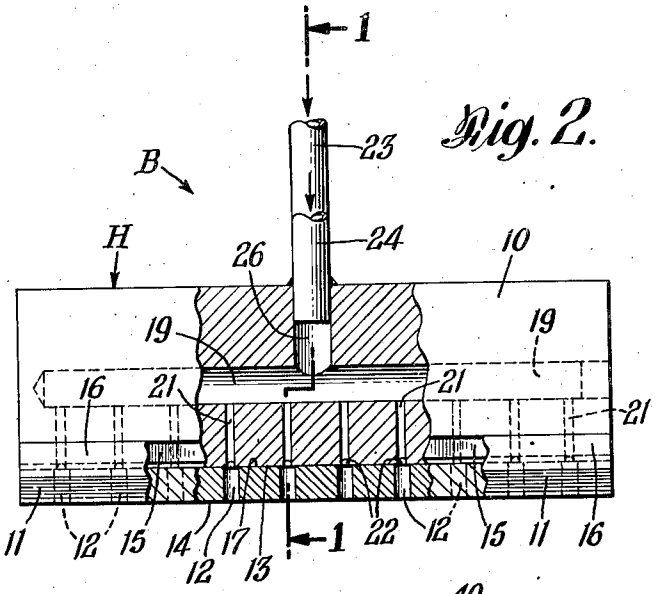

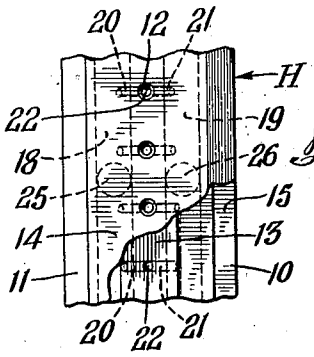

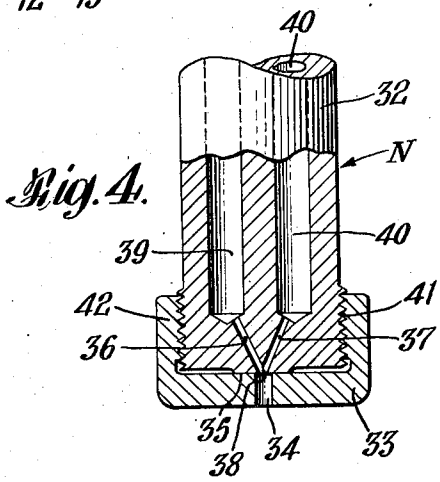

INVENTOR
HOMER W. JONES
BY E. Greenwald
ATTORNEY

Patented Dec. 21, 1948 2,456,784

UNITED STATES PATENT OFFICE

2,456,784

BLOWPIPE APPARATUS

Homer W. Jones, Westfield, N. J., assignor to Union Carbide and Carbon Corporation, a corporation of New York

Application March 9, 1944, Serial No. 525,658

8 Claims. (Cl. 158—27.4)

1

This invention relates to blowpipes and more particularly to post-mixed oxy-fuel gas blowpipes adapted to produce externally mixed flames which are suitable for welding as well as heating.

A post-mixed blowpipe is disclosed and claimed in the application of Barnes, Burch and Edwards, Serial No. 326,880, filed March 30, 1940, issued August 22, 1944, as Patent No. 2,356,196. Such post-mixed blowpipe is adapted to produce an externally mixed oxy-fuel gas flame having a stable and well-defined primary combustion zone and a substantially non-luminous secondary combustion zone. In order to obtain such flame, a blowpipe tip is provided having gas outlet passages converging at an acute included angle and adapted to discharge two gas streams at substantially equal velocities, one of the passages being adapted to discharge a stream of fuel gas and the other a stream of oxidizing gas. The axes of the passages lie in the same plane and their discharge orifices coincide in the plane of a surface of the tip to form a common discharge orifice, so that the fuel and oxidizing gas streams collide in the common discharge orifice at the instant the streams discharge from their respective passages, to produce a single combustible oxy-fuel gas stream immediately externally of the tip.

Oxy-fuel gas flames of the post-mixed type produced by such blowpipe as well as oxy-fuel gas flames of the diffusion type, being composed of externally mixed combustible and combustion-supporting gases, have the advantage of eliminating flashbacks and backfires, but the shape of the flame is somewhat ragged and of varying character. Furthermore, such flames, prior to the present invention, have not been usable for welding. They are somewhat inferior to the premixed oxy-fuel gas flames of ordinary blowpipes which are provided with mixers for combining the combustible and combustion-supporting gases within the blowpipe or nozzle to form a combustible gas mixture. Blowpipes and nozzles of the premixed type, however, have the serious drawback of being susceptible to backfires and flashbacks due to an appreciable volume of the combustible gas mixture in the mixed-gas passage between the mixing point and the discharge orifice.

The main object of this invention, therefore, is to provide blowpipe apparatus adapted to produce oxy-fuel gas flames the shape and character of which are equal to the premixed type and which equal the externally mixed type in resistance to flashbacks and backfires; such blowpipe apparatus being simple and economical in its

2

parts, relatively easy and inexpensive to manufacture, and adapted to be readily disassembled for cleaning or replacement. Another object is to provide a method of improving the shape and character of post-mixed oxy-fuel gas flames, making them suitable for welding as well as other purposes.

In general, according to the invention, a post-mixed nozzle is provided having an inclined fuel-gas passage and an inclined oxidizing gas passage converging to form a common orifice in the bottom of a relatively short mixed-gas passageway in a removable member, such passageway being designed to improve the resulting flame without affecting its resistance to backfire and flashback. The mixed-gas passageway in the removable member is cylindrical, having a length of between ⅛ inch and 1 inch. A cylindrical passageway approximately ¼ inch long and equal in cross-section to the sum of the cross sections of the gas passages has been found to work well in a blowpipe using about 12 cubic feet of acetylene per hour and a like amount of oxygen. The cross-sectional area of the mixed-gas passageway should be proportional to that of the separate gas discharge passages. As a result, a flame is obtained the shape of which is equal to that of the premixed type, the resistance to flashback and backfire of such flame being equal to that of the externally-mixed type. Furthermore, the nature of such flame may be made oxidizing, neutral, or carburizing, as desired, so that such flame is usable not only for heating and preheating but also for welding ferrous and other metals.

Referring to the drawing:

Fig. 1 is a view mainly in cross-section of a multi-flame blowpipe exemplifying the invention;

Fig. 2 is a view mainly in side elevation of such blowpipe, portions of the blowpipe head being broken away and shown in section;

Fig. 3 is a fragmentary bottom plan view of the multi-flame head shown in Figs. 1 and 2; and

Fig. 4 is a view partly in side elevation and partly in cross-section of a single flame blowpipe nozzle embodying the invention.

The blowpipe B shown in Figs. 1, 2 and 3 of the drawing comprises a head H including a body 10 and a tip 11 removably mounted on such body. The tip 11 is provided with a plurality of uniformly spaced relatively short mixed-gas passageways 12 extending between a raised surface 13 of the body 10 and the outer surface or face 14 of the tip. The passageways 12 are disposed in a common plane and in substantially parallel

relation with one another. The body 10 is provided with laterally and downwardly opening corner grooves 15, 15, and the tip 11 is provided with corresponding upwardly and inwardly facing tongues 16, 16 engaging the grooves 15 so that the tip may be removed readily from the body by sliding the tip with respect to the body in the longitudinal direction of the grooves. The inner surface 17 of the tip 11 fits the raised surface 13 of the body 10.

The body 10 is provided with a pair of spaced substantially parallel gas distributing passages 18 and 19 for a combustible gas and a combustion-supporting gas, respectively. Leading from the gas distributing passage 18 are a series of uniformly spaced gas discharge passages 20 for discharging fuel gas, in this case acetylene, at high velocity. A corresponding series of uniformly spaced gas discharge passages 21 lead from the oxidizing gas distributing passage 19 for discharging the combustion-supporting gas, in this case oxygen, at high velocity. The discharge orifice of each of the fuel-gas passages 20 coincides with the discharge orifice of an oxidizing gas passage 21 in the plane of the surface 13 of the body 10 to form a common discharge orifice 22 at the bottom of each of the mixed-gas passageways 12.

The blowpipe B includes an acetylene supply pipe 23 and an oxygen supply pipe 24, the outlet ends of such pipes being silver soldered to the head 10 in communication with an acetylene passage 25 and an oxygen passage 26 which, in turn, are in communication with the longitudinal centers of the gas distributing passages 18 and 19, respectively. The acetylene pipe 23 is connected to a suitable acetylene supply source A by conduit means including a pressure regulator 27 and a needle valve 28. The oxygen pipe 24 of the blow pipe is likewise connected to a suitable oxygen supply source O by conduit means including a pressure regulator 29 and a needle valve 30.

In considering the operation of the blowpipe shown in Figs. 1, 2 and 3, the pressure regulators 27 and 29 are adjusted so as to supply oxygen and acetylene to the blowpipe B at substantially equal pressures. The needle valves 28 and 30 are then opened and the gas-discharge passages 20 and 21 discharge oxygen and acetylene streams which collide in each of the common discharge orifices 22. The included angle between the discharge passages 20 and 21 is acute and such that the collision between the acetylene and oxygen streams is effective to form a series of combustible gas streams externally of the head H. These combustible gas streams are ignited and burn in free space, each flame having a primary combustion zone the shape of which is somewhat like that of a premixed oxy-acetylene flame. By adjusting the needle valves 28 and 30, the oxy-acetylene flames may be made neutral or oxidizing or carbonizing, as desired.

The length of each of the mixed-gas passageways 12 is preferably of the order of twice the diameter thereof, and the cross-sectional area of such passageways, where the inner wall of the passageways is cylindrical, is preferably proportional to the cross-sectional areas of the separate gas passages 20 and 21. Where the shape of the passageways is cylindrical, the cross-sectional area of the passageway preferably is equal at least to the sum of the cross-sectional areas of the passages 20 and 21. The dimensions of the mixed-gas passageways are such that the flames are like post-mixed flames insofar as their resistance to flashback and backfire is concerned, and like premixed flames insofar as their shape and nature are concerned, being even suitable for welding.

Referring to Fig. 4 of the drawing, there is shown a single flame blowpipe nozzle N exemplifying the invention, which comprises a body 32 and a tip 33 removably mounted on the body. The tip 33 has a short mixed-gas passageway 34, the internal wall of which is cylindrical, extending between a raised surface 35 of the body and the outer side or face of the tip. The body 32 has separate gas outlet passages 36 and 37 converging at an acute angle, such passages being adapted to discharge two gas streams at substantially equal velocities. One of the passages is adapted to discharge a stream of fuel gas and the other a stream of oxidizing gas. The axes of the passages 36 and 37 lie in the same plane and the discharge orifices of the passages coincide in the plane of the surface 35 at the bottom of the passageway 34 to form a common discharge orifice 38. The convergent gas outlet passages 36 and 37 are supplied with a suitable combustible gas and a suitable combustion-supporting gas through separate gas supply passages 39 and 40 in the body 32. Such gas supply passages are connected to sources of the respective gases.

The axes of the convergent passages 36 and 37 are located in a plane which passes through the longitudinal axis of the body 32. Such axis passes through the center of the common orifice 38, and is in longitudinal alignment with the longitudinal axis of the mixed-gas passageway 34. The body 32 in this modification is provided with a threaded outer annular end portion 41 concentric with the longitudinal axis of the body 32, and the tip 33 has an annular internally threaded flange 42 engaging the threaded end portion 41 of the body. This constructional arrangement facilitates the manufacture of the nozzle N, and the assembly may be readily taken apart for cleaning or replacement.

In considering the operation of the nozzle N shown in Fig. 4, the cross-sectional area and length of the mixed-gas passageway 34 are adapted to cause the combustible gas mixture stream discharged by the orifice 38, when ignited, to produce an oxy-fuel gas flame the shape of which is substantially like that of a premixed oxy-acetylene flame. Such novel structure also produces a flame that equals the externally mixed type in resistance to flashbacks and backfires. Furthermore, the flame may be used for welding, as well as any other purpose for which either a premixed or post-mixed type of flame is suitable.

What is claimed is:

1. In a blowpipe nozzle, the combination with a body of the type adapted to produce a post-mixed oxy-fuel-gas flame, having an inclined fuel-gas passage and an inclined oxidizing-gas passage converging at a common orifice in a surface of the body, which flame is subject to undesirable diffused shape rendering it unsuitable for welding, of means for improving the shape of such flame for welding, said means comprising a tip operatively associated with said body, said tip having a mixed-gas passageway extending from said surface to the outer surface of the tip, the cross-sectional area of said passageway being equal at least to that of both said passages, and the length of said passageway being of the order of twice the diameter of said passageway.

2. In a post-mixed oxy-acetylene blowpipe

nozzle, the combination with a body having an oxygen passage and fuel gas passage located in a plane passing through the longitudinal axis of the body, said passages converging at an acute included angle to form a common orifice in the plane of a surface of the body at right angles to such axis, which axis passes through the center of said orifice, said body also having a threaded outer annular end portion concentric with such axis; of a tip having an annular internally threaded flange engaging the threaded end portion of said body, said tip also having a central mixed-gas passageway the longitudinal axis of which is in alignment with the longitudinal axis of said body, the cross-sectional area of said passageway being equal at least to the sum of the cross-sectional areas of said passages, and length of such passageway being of the order of twice the diameter thereof, such cross-sectional area and length being adapted to cause the combustible gas mixture discharged by such orifice, when ignited, to produce an oxy-fuel gas flame the shape of which is substantially like that of a premixed oxy-fuel gas flame.

3. A blowpipe device comprising a head including a body and a tip mounted on said body, said tip having a plurality of spaced mixed-gas passageways extending between the surface of said body and the outer surface of said tip, said body having separate fuel gas and oxidizing gas distributing passages, and a series of spaced outlet passages leading from such oxidizing gas distributing passage for discharging oxidizing gas streams at high velocity, and a series of spaced outlet passages leading from such fuel gas distributing passage for simultaneously discharging fuel streams at high velocity, the discharge orifice of each of said fuel gas passages coinciding with the discharge orifice of an oxidizing gas passage in the plane of said surface of said body to form a common discharge orifice at the bottom of each of said mixed-gas passageways, the fuel and oxidizing gas passages of each orifice being equally inclined with respect to said plane, whereby said outlet passages are adapted to discharge oxygen and fuel-gas streams which collide in such common discharge orifices, the included angle between said coinciding outlet passages being such that the collision between said oxidizing and fuel-gas streams is effective to form a series of combustible gas streams externally of said head, said combustible gas streams, when ignited, being adapted to produce high temperature flames each having a primary combustion zone, and means for supplying such oxidizing and fuel-gas streams, respectively, in such proportions that a combustible mixture is produced in each of said primary combustion zones, the cross-sectional area of each passageway being equal at least to the sum of the cross-sectional areas of each pair of passages, and the length of each passageway being of the order of twice the diameter thereof, the length and cross-sectional area of said passageways being such that flashbacks and backfires of such flames are inhibited while the shape of such flames is like that of a premixed flame.

4. An externally mixed flame blowpipe device as defined by claim 3, in which said oxidizing-gas passages are arranged in parallel relation to one another in a common plane, and said fuel-gas discharge passages are arranged in parallel relation with one another in a common plane.

5. An externally mixed flame blowpipe device as defined by claim 3, in which the mixed-gas passageways in said tip are arranged in spaced parallel relation with one another in a common plane, and the common orifice at the bottom of each mixed-gas passageway is located centrally with respect to such passageway.

6. An externally mixed flame blowpipe device as defined by claim 3, in which said body is provided with laterally and downwardly opening grooves, and said tip is provided with upwardly and inwardly facing tongues fitting said grooves so that the tip may be removed from the body by sliding the tip with respect to the body in the direction of said grooves.

7. A blowpipe nozzle comprising, in combination, a body having a pair of gas passages converging to a common orifice in a surface of said body, each of said passages being inclined the same degree to the axis of said orifice and said passages being adapted to discharge two gas streams at substantially equal velocities, one of said passages being adapted to discharge a stream of fuel gas and the other of said passages being adapted to discharge a stream of oxidizing gas, so that these two streams will collide at said orifice to produce a single combustible gas stream, and a tip removably secured to said body and having a combustible gas passageway extending therethrough and coaxial with said orifice, the inner surface of said tip engaging the surface of said body around said orifice and the inner end of said passageway communicating directly with said orifice, so that said single gas stream will flow through said passageway and, when ignited as it discharges from said passageway, will produce a high temperature flame having a premixed type of primary combustion zone, the cross-sectional area of said passageway being equal at least to the sum of the cross-sectional areas of said passages, and the length of said passageway being of the order of twice the diameter of such passageway, whereby flashbacks and backfires of such flame are inhibited while the shape of such flame is like that of a premixed flame.

8. A blowpipe nozzle having a mixed-gas passageway extending to the outer face of the nozzle, gas passages converging at an acute angle to form a common orifice communicating directly with the inner end of said passageway, the axes of said gas passages forming equal angles with the axis of the passageway, said passages being adapted to discharge two gas streams at substantially equal velocities, one of said passages being adapted to discharge a stream of fuel gas and the other of said passages being adapted to discharge a stream of oxidizing gas, whereby such fuel-gas stream and such oxidizing gas stream will collide at the instant that both of said streams discharge from their respective passages, to produce a single combustible gas stream which flows through said passageway, said single gas stream, when ignited as it discharges from said passageway, being adapted to produce a high temperature flame having a premixed type of primary combustion zone, the length and cross-sectional area of said passageway being such that flashbacks and backfires of such flame are inhibited while the shape of such flame is like that of a premixed flame, the cross-sectional area of said passageway being at least equal to the sum of the cross-sectional areas of said passages, and the length of said passageway being of the order of twice the diameter of said passageway.

HOMER W. JONES.

(References on following page)

REFERENCES CITED

The following references are of record in the file of this patent:

UNITED STATES PATENTS

Number	Name	Date
1,310,101	Zouck	July 15, 1919
1,371,309	Jenkins	Mar. 15, 1921
1,373,043	Amburg	Mar. 29, 1921
2,178,451	Jones et al.	Oct. 31, 1939
2,266,834	Walker et al.	Dec. 23, 1941
2,337,087	Deck	Dec. 21, 1943
2,348,774	Anthes	May 16, 1944
2,356,196	Barnes et al.	Aug. 22, 1944

FOREIGN PATENTS

Number	Country	Date
181,091	Switzerland	Feb. 17, 1936
217,021	Germany	Dec. 13, 1909
402,400	Germany	Sept. 15, 1924
582,889	France	Oct. 22, 1924