Oct. 12, 1948. M. C. TERRY 2,451,366

AIR CONDITIONING APPARATUS

Filed March 16, 1946 2 Sheets-Sheet 1

FIG. 1.

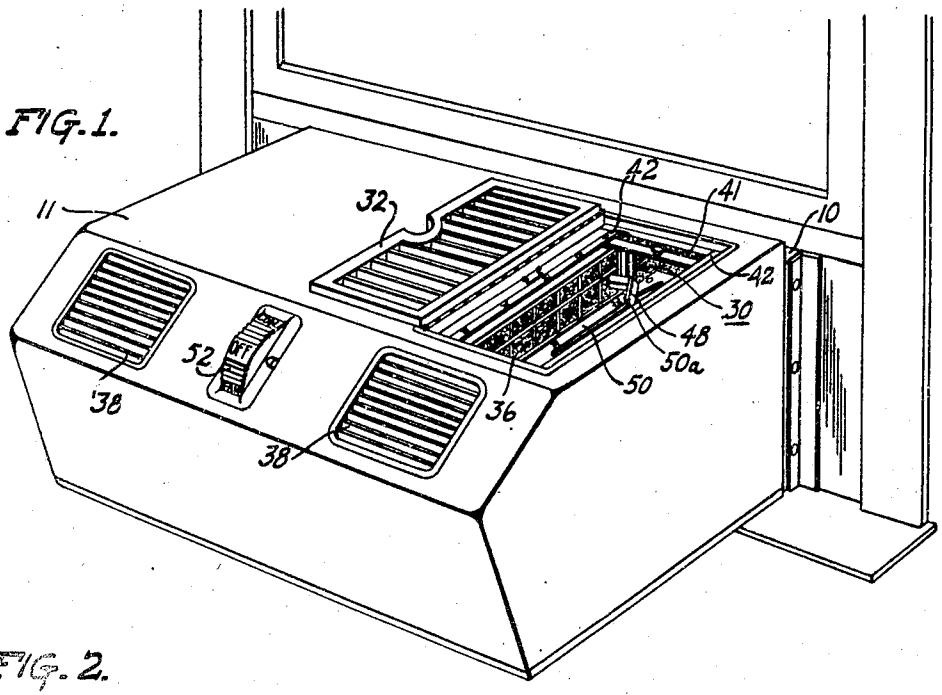

FIG. 2.

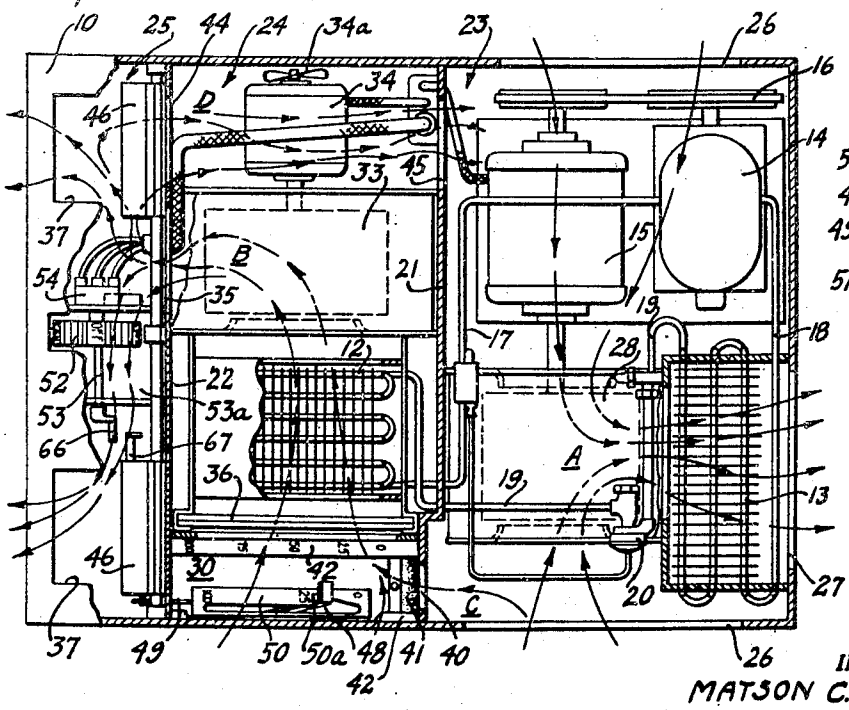

FIG. 3.

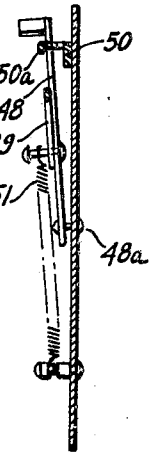

INVENTOR.
MATSON C. TERRY
BY
Carl H. Symestvedt
AGENT

Oct. 12, 1948. M. C. TERRY 2,451,366

AIR CONDITIONING APPARATUS

Filed March 16, 1946 2 Sheets-Sheet 2

FIG. 4.

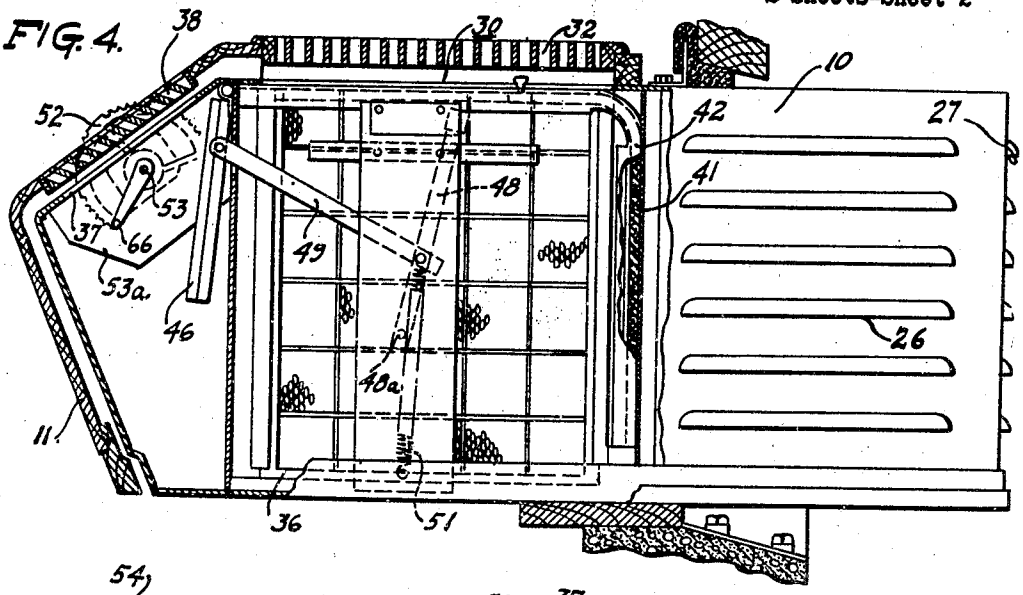

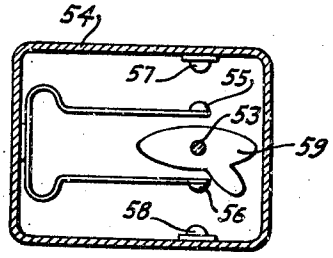

FIG. 5.

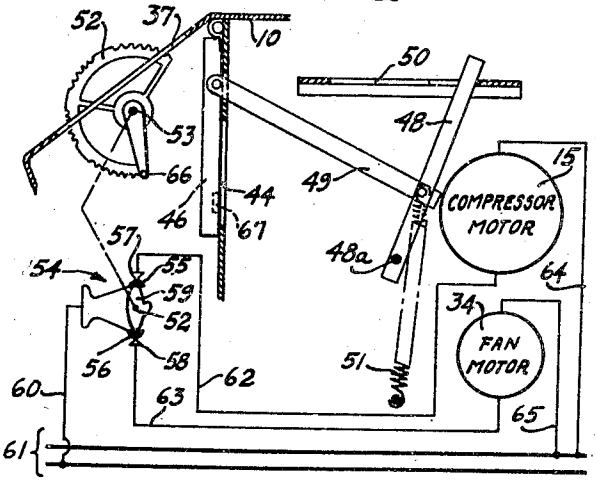

FIG. 7.

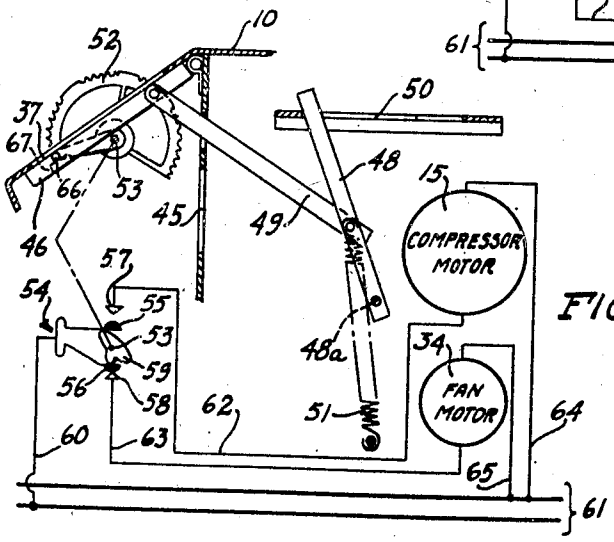

FIG. 6.

INVENTOR.
MATSON C. TERRY
BY
Carl H. Lynnestedt
AGENT

Patented Oct. 12, 1948 2,451,366

UNITED STATES PATENT OFFICE

2,451,366

AIR CONDITIONING APPARATUS

Matson C. Terry, Rydal, Pa., assignor, by mesne assignments, to Philco Corporation, Philadelphia, Pa., a corporation of Pennsylvania

Application March 16, 1946, Serial No. 654,923

9 Claims. (Cl. 62—129)

1

The present invention relates to air-conditioning apparatus. More particularly, the invention pertains to improvements in that type of self-contained air-coolers which are adapted to be partly or wholly mounted within a room to absorb heat from the air therein, and which are provided with means to reject such heat outside the room.

For that purpose, coolers of that type are generally provided with air pumping-means and with passageways for the forced circulation of air through the apparatus. Also, such coolers are usually provided with damper means adjustable to regulate the flow of air through said passageways, so that the desired condition, in effecting cooling and ventilation of the room, may be obtained. Moreover, air-conditioning apparatus of this general type, are commonly adapted to be used, as an exhausting fan, to withdraw foul air from the room. This has been done by so adjusting the damper-means that the so-called "room-air" outlet (which discharges into the room) is completely closed and the so-called "pump-out" outlet (which communicates with the outside) is fully opened. In this manner, air drawn from the room is discharged outdoors instead of being recirculated into the room, as is the case when the apparatus is used to condition the room-air. To prevent wastage of refrigeration, the apparatus is customarily equipped with control means adapted to be manually adjusted to maintain the function of the air-pumping means but to interrupt the operation of the motor-compressor in the cooling system, whenever the apparatus is to be used for the sole purpose of withdrawing foul air from the room. However, with an arrangement of that kind, the damper and the motor-compressor controls must be individually and separately adjusted. Furthermore, in resetting the apparatus for operation as an air-cooler, the controls must again be individually and separately adjusted in proper position for that function. Thus, in adapting the apparatus to the desired function, the user must pay particular and careful attention to the relative positions of the controls and must make certain that the respective adjustments of said controls are properly correlated.

It is, therefore, the primary object of this invention to eliminate the necessity of manipulating a plurality of control devices when adapting the apparatus to perform its various functions as an air-conditioner or as an exhausting-fan. This is accomplished by providing a novel arrangement of parts whereby adjustment of the

2

damper means, to open the "pump-out" outlet and to close the "room-air" outlet, will automatically adjust switching means to stop the operation of the motor-compressor. Also, the arrangement is such that adjustment of the switching means, to initiate operation of the motor-compressor, will automatically adjust the damper means in position to open the "room-air" outlet and to close the "pump-out" outlet, should the damper means be in the reverse position when the switching means is so adjusted.

It is another object of the invention to provide a control arrangement which is capable of accomplishing the results mentioned above, but which is adapted to permit limited adjustment of the damper means for the purpose of allowing a certain predetermined percentage of room-air to be "pumped-out" without effect on the setting of the switching means when in position for the normal operation of the cooling system. This is made possible through a novel association of the elements providing the structure which establishes the connection between the "pump-out" damper control and the control-switch knob or dial.

Still another and more particular object of the invention resides in the simplification of the control mechanisms to avoid confusing the user and to insure optimum efficiency of the apparatus under all operating conditions. With that end in view, the controls are confined in two readily accessible locations (one for the switch control means, the other for the damper control means), and the controls themselves are so constructed that they can be readily associated with identification markings and adjustment indicia, in full view of the user.

Moreover, the apparatus, as a whole, is characterized, generically, by improvements in the relative arrangement and association of the various elements, which make it possible to realize, in a most advantageous and practical way, the more specific objects of the invention, as above referred to. Furthermore, the particular disposition and cooperation of the various elements, as embodied in an apparatus constructed in accordance with the present invention, contribute toward increasing the operational efficiency of such an apparatus when used to perform any one of its several functions.

The foregoing, together with other objects and characteristic constructional features of the invention, will clearly appear from the following description based upon the accompanying drawings, in which:

Figure 1 is a prospective view of an air-conditioning apparatus embodying the invention, the "room-air" inlet grille being shown in open position to illustrate certain features of the invention;

Figure 2 is a plan view showing the internal parts of the apparatus;

Figure 3 is a detail view, partly in section and partly in elevation, illustrating one constructional feature of the damper-control mechanism;

Figure 4 is an end view of the apparatus with certain parts shown in section;

Figure 5 is an enlarged cross-sectional view illustrating the preferred construction of the switch and showing the same in "off" position;

Figures 6 and 7 are schematic views illustrating the control mechanisms in different operative positions.

The apparatus, shown in the drawings, is of the type adapted to be mounted and supported directly in a window of a room to be cooled. However, it is to be understood that the invention is also applicable to other types of air-conditioning apparatus. For instance, the improved control mechanisms, as well as the improvements in the construction and relative association of the parts, are adaptable for incorporation in those apparatus which include a console designed to be placed on the floor of a room and provided with a duct structure communicating, through a window or like opening, with the air exterior to the room.

Referring particularly to the drawings, the apparatus, as shown, includes a housing 10 adapted to extend horizontally through a space between the sill and partly open sash of a window, as represented in Figures 1 and 4, so that the front portion of the housing projects into the room and the rear portion of the housing projects outside the room. A cabinet structure 11, made of wood or other suitable cabinet-fabricating material, encloses the portion of the housing which projects into the room.

As can be seen in Figure 2, the housing 10 contains a conventional refrigerating system of the expansion-compression type which basically comprises an evaporator 12 and a condensing unit, the latter including a condenser 13, a compressor 14 and a motor 15 adapted to actuate the compressor through a belt and pulley drive 16. The housing is so constructed and the refrigerating system is so arranged, that room-air passes in heat exchange relation with the evaporator 12, and outside-air flows in heat exchange relation with the condenser 13. In this manner, the liquid refrigerant, as it evaporates in the evaporator, may absorb heat from the room-air to cool the same before re-circulation into the room. The heat-laden gas, forming in the evaporator during the vaporization process, is drawn through a suction line 17 into the compressor 14, where the gas is compressed and discharged through a conduit 18 into the condenser 13. There, the gas gives up its heat to the circulating outside-air which carries the heat outdoors. Removal of heat from the compressed refrigerant condenses the same back to liquid state, and the liquid refrigerant, from the condenser, flows to the evaporator through a liquid line 19 in which is interposed a suitable flow restrictor, such as an expansion valve 20.

With further reference to the particular construction, as shown clearly in Figure 2, the housing 10 is provided with relatively spaced partitions 21 and 22 which cooperate with the walls of said housing to define three main compartments 23, 24 and 25.

The compartment 23 takes up substantially the entire portion of the housing projecting outwardly of the room window, and provides a machinery chamber which encloses the condensing unit of the refrigerating system. As represented by the sets of arrows A in Figure 2, circulation of outside-air through the machinery chamber is effected by means of a centrifugal fan 28 mounted to be driven by the compressor-motor 15 for drawing outside air into said chamber through groups of side apertures 26 and for blowing such air directly across the condenser and out a group of rear apertures 27. It is to be noted that one group of side apertures 26 is positioned opposite the compressor and its motor. In this manner, both the compressor and motor are effectively air-cooled.

The compartment 24 constitutes a room-air conditioning chamber which encloses the evaporator 12 of the refrigerating system. Room-air is admitted into this chamber through an opening 30 provided in the top wall of the housing 10 (see Figures 1 and 4) and registering with a hinged inlet-grille 32 arranged on the cabinet structure 11. In order to provide for proper circulation of room-air through the evaporator and to assure adequate heat exchange therebetween, the inlet 30 is located ahead of one end of the evaporator 12, and a centrifugal fan 33, driven by a motor 34, is mounted in back of the other end of the evaporator. Thus, as represented by the set of arrows B in Figure 2, room-air is drawn into the conditioning chamber and directly through the evaporator 12, and is then blown through an opening 35 in the partition 22. A filter 36 is interposed in the path of the room-air flow, preferably at the entrance to the evaporator, where the filter may be readily accessible through the air inlet 30, for cleaning or replacement.

The compartment 25 provides, in effect, a plenum chamber which receives the air discharged through the opening 35. The provision of such a chamber eliminates objectionable air noises and prevents undesirable drafts in the room. The conditioned air is discharged from the plenum chamber into the room through openings 37 provided in the front wall of the housing 10 and registering with outlet-grilles 38 in the front wall of the cabinet structure 11.

As indicated by the set of arrows C in Figure 2, fresh outside air may be admitted into the conditioning-chamber through a passageway 40 formed in the partition 21. This passageway is located ahead of the filter 36 so that the fresh outside air admitted in the conditioning chamber, may be properly intermixed and conditioned with, and in the same manner as, the re-circulated room-air. A shutter 41, of suitable construction, is associated with the passageway 40 to regulate the size thereof in accordance with the desired percentage of fresh outside-air to be mixed with the re-circulated room-air. For that purpose, the shutter 41 is conveniently mounted to slide in guide-means 42, provided with a graduated scale, so that the position of the shutter may be readily and accurately determined for the admission of the desired percentage of fresh outside-air into the conditioning chamber.

Moreover, as indicated by the set of arrows D in Figure 2, air may be pumped out of the room and discharged outdoors through passageways 44 and 45, formed in partitions 22 and 21, respectively. For that purpose, a damper struc-

ture, including adjustable interconnected hinged dampers 46, is provided in the plenum chamber to control the flow of air therethrough. In order to effect thorough "pump-out," the dampers 46, when adjusted in one extreme position, completely close the "room-air" outlet-openings 37, as represented in Figure 6. In this manner, air discharged in the plenum chamber 25 is prevented from being recirculated into the room, and is diverted through the "pump-out" passageways 44 and 45. It is to be noted that one of the dampers is also disposed to close the "pump-out" passageway 44 when said dampers are adjusted, in the other extreme position, to assume the general position indicated in Figure 7. When so adjusted, the dampers fully open the "room-air" outlet openings 37. Accordingly, the air passing through the plenum chamber is prevented from flowing in the direction represented by arrow D in Figure 2, so that no "pump-out" takes place, but such air is permitted to flow in the direction represented by arrows B in Figure 2 to be recirculated in the room. It may be desirable at times, to allow "pump-out" of a small percentage of the air discharged into the plenum chamber while the greater percentage of such air is being blown into the room. For that purpose, the dampers 46 are adjustable in an intermediate position, as shown in Figures 2 and 4. With reference to the "pump-out" feature, it is to be noted that the "pump-out" openings 44 and 45 are located in line with the evaporator-fan motor 34 so that the flow of air is directed to traverse said motor (see Figure 2) thus effectively cooling the same. Moreover, the fan motor 34 is advantageously provided with a tail fan 34*a* to assist in the circulation of the cooling air about said motor during the "pump-out" function of the apparatus. Also, when the apparatus is so regulated that no "pump-out" takes place, the tail fan 34*a* creates a disturbance of the air within the space in which the mentioned motor 34 is mounted, thereby causing sufficient circulation of such air to produce the desired cooling effect on said motor.

In accordance with the present invention, adjustment of the damper structure is accomplished by means of an improved control mechanism conveniently located for access through the "room-air" inlet 30, upon opening the grille 32. This control mechanism includes a pivoted lever 48 and a link 49 hingedly interconnecting said lever and the damper structure. The free end of the lever 48 is adapted to be adjustably moved in a slotted guide 50 which is conveniently provided with a graduated scale so that the user may readily and accurately set the damper control for the desired percentage of air to be "pumped-out."

In order to effect retention of the dampers in intermediate position, means such as a notch 50*a* (Figures 1 and 2) is provided in the slotted guide 50 at a fixed point to permit "pump-out" of the predetermined percentage, say 25%, of the air discharged into the plenum chamber. A spring 51 is connected with the damper control mechanism (Figure 3) to bias the lever 48 thereof in the direction of said notch. The biasing action of this spring ensures engagement between said lever and notch. Moreover the spring 51 is mounted off-center with respect to the pivot point 48*a* of said lever 48 to maintain the latter in either extreme position as shown, respectively, in Figures 6 and 7.

Also in accordance with the invention, energization of the motor 15 to drive the compressor 14 and the condenser-fan 28, and energization of the motor 34 to drive the evaporator-fan 33, are accomplished by means of a single control element 52 in the form of a dial bearing suitable indicia, such as "Cool," "Off" and "Fan." This dial projects through the front portion of the apparatus to be readily accessible to the user. As best seen in Figure 2, the dial element 52 is fixed to a rotatably mounted rod 53, the latter being journaled in suitable bearings provided in the side portions of a box-like element 53*a* (Figures 2 and 4). The box-like element isolates the slotted portion through which the dial projects and thus prevents the escape of air through such portion. The rod 53 is adapted to actuate a switch 54 which may be of any suitable known construction. As shown in Figure 5, the switch 54 is preferably of the type including a pair of movable contacts 55 and 56, a pair of fixed contacts 57 and 58, and a cam-shaped actuator 59 for said movable contacts. The motor circuits are diagrammatically illustrated in Figures 6 and 7. As indicated in these figures, the movable contacts are connected through a common lead 60 with one of the lines 61 which provide the source of electrical energy; one fixed contact is connected with the compressor-motor 15 through a lead 62; the other of the fixed contacts is connected with the evaporator-fan motor 34 through a lead 63; and the motors 15 and 34 are respectively connected through leads 64 and 65 with the other of said lines 61. When the control dial element 52 is set in "Off" position, the cam-shaped actuator 59 assumes the position shown in Figure 5 and therefore allows the movable contacts 55 and 56 to disengage the fixed contacts 57 and 58 accordingly opening both the fan-motor circuit and the compressor-motor circuit. When the control dial element 52 is set in "Fan" position, the actuator 59 assumes the position shown in Figure 6 and therefore moves one movable contact 56 into engagement with its associated fixed contact 58, accordingly closing the fan-motor circuit to energize the same. When the dial element is set in "Cool" position, the actuator assumes the position shown in Figure 7 and therefore moves the movable contacts into engagement with their respectively associated fixed contacts thereby closing both motor circuits to energize the same.

As hereinbefore mentioned, the dampers 46 may be adjusted, through manipulation of the lever 48, to close completely the "room-air" outlet openings 37 and to open fully the "pump-out" outlet passageway 45 for the purpose of effecting "pump-out." When this adjustment is made, the switch is automatically set to interrupt the operation of the compressor-motor. This automatic setting is accomplished by the provision of means effective to move the dial to "Fan" position whenever the lever 48 is manually set in the position shown in Figure 6 to effect "pump-out." For that purpose, the switch actuating rod 53 carries a crank-like lever 66 adapted for engagement with an extension 67 (Figure 2) provided on one of the dampers 46, when the damper structure is moved, from the position shown in Figure 4 or from the position shown in Figure 7, to the position shown in Figure 6. In this manner the dial, when set either in "Off" or in "Cool" position, is moved to "Fan" position by adjustment of the damper structure to effect full "pump-out."

This same arrangement also makes it possible to cause the damper structure to return automati-

cally into position for closing the "pump-out" passageway, when the dial is manually set from the "Fan" position to either the "Off" or the "Cool" position. This is effectively accomplished by engagement of the crank-like lever 66 with extension 67 which returns dampers 46 and lever 48 to the position shown in Figure 7. The return of dampers 46 and lever 48 to this latter position is assisted by action of the over-center spring 51 connected to damper-control mechanism, since said spring will urge the lever and damper-structure arrangement to position shown in Figure 7 when the dial is moved from its "Fan" position.

It is pointed out that movement of the damper-control to the 25% "pump-out" adjustment, will not disturb the adjustment of the dial and switch and that, likewise, adjustment of the dial and switch to its various positions will not act on the dampers when disposed in said 25% "pump-out" position.

From the foregoing, it will be appreciated that an air-conditioning apparatus constructed in accordance with the present invention, provides for ready and accurate adjustment whereby to perform, in a most efficient manner, the several functions for which such an apparatus is intended. Especially, the invention assures proper control of the apparatus, by providing only two main control-mechanisms which are so mutually related that, to meet special conditions, adjustment of one mechanism will automatically adjust the other mechanism.

It is to be understood that modifications may be made in the construction of the apparatus without departing from the spirit of the invention. Therefore, the invention is not limited to the preferred embodiment shown in the drawings and described in the specification, but is subject only to such limitations as are imposed by the prior art or are particularly indicated in the appended claims.

I claim:

1. In air-conditioning apparatus: an air-conditioning-chamber; means operable to provide refrigeration in said chamber; control means adjustable to start and to stop the operation of the refrigeration-providing means; means including a damper structure selectively adjustable to direct the air from said chamber either to the inside or to the outside of a room; and mechanism including means operable to stop operation of the refrigeration-providing means upon adjustment of said structure to direct air from said chamber to the outside of the room, and also operable to adjust said structure to direct air from said chamber to the inside of the room upon adjustment of said control means to start operation of the refrigeration-providing means.

2. In an air-conditioning apparatus: an air-conditioning chamber; means operable to provide refrigeration in said chamber; control means capable of manual adjustment to start and to stop operation of the refrigeration-providing means; means including a damper structure adjustable in one position to direct the air from said chamber to the inside of a room, in another position to direct air from said chamber to the outside of the room and in still another position to direct air from said chamber both to the inside and to the outside of the room; and mechanism including manually operable means to adjust said structure in any one of said positions, and means operable to effect automatic adjustments of said structure in the first mentioned position upon manual adjustment of said control means to start operation of the refrigeration-providing means, and also operable to effect automatic adjustment of said control means to stop operation of the refrigeration-providing means upon manual adjustment of said structure in the second mentioned position.

3. In air-conditioning apparatus: an air-conditioning chamber; a refrigerant evaporator in said chamber; a condensing unit, including a motor-driven compressor and a condenser to supply refrigerant to said evaporator; a motor-driven fan arranged to pass air in heat exchange relation with said evaporator, and to discharge such air out of said chamber; air-flow controlling means adapted for manual adjustment to direct the air from said chamber selectively either to the inside or to the outside of a room; switch means adapted for manual adjustment to control the operation of said compressor and said fan; and mechanism including means operable to effect automatic adjustment of the switch means for stopping the operation of said compressor while maintaining the operation of said fan, upon manual adjustment the air-flow controlling means to direct the air from the chamber to the outside of the room, and operable to effect automatic adjustment of the air-flow controlling means to direct air from said chamber to the inside of the room upon manual adjustment of the switch means to restore operation of the compressor.

4. In air-conditioning apparatus: a refrigeration system including an evaporator, a condensing unit and control means adjustable to initiate and to terminate operation of said unit; a chamber adapted to enclose said evaporator, said chamber having inlet means to admit air for circulation in heat exchange relation with said evaporator, and having outlet means to discharge such air; a second chamber adapted to receive the air discharged from the first mentioned chamber, said second chamber having outlet means selectively adjustable to direct such air either to the inside or to the outside of a room; and, mechanism including means operable to effect automatic adjustment of the condensing-unit control means to interrupt operation of said unit upon adjustment of said outlet means to direct air from said second chamber to the outside of the room, and operable to effect automatic adjustment of said outlet means to direct air from said second chamber to the inside of the room upon adjustment of said control means to initiate operation of the condensing unit.

5. In apparatus for cooling air within a room: a refrigeration system including an evaporator, a condensing unit and control means capable of manual adjustment to initiate and to terminate operation of said unit; a housing provided with a plurality of compartments, one of said compartments defining an air-conditioning chamber enclosing said evaporator and having inlet means to admit air into said chamber, another of said compartments defining a plenum chamber communicating with the air-conditioning chamber to receive air discharged therefrom, said plenum chamber having outlet means capable of manual adjustment to direct air from the plenum chamber selectively either into the room to be cooled or out of said room; and, mechanism including means operable to effect automatic adjustment of the condensing-unit control means to interrupt operation of said unit upon manual adjustment of said outlet means to direct air from the

plenum chamber out of the room, and operable to effect automatic adjustment of said outlet means to direct such air into the room upon manual adjustment of said control means to initiate operation of the condensing unit.

6. In apparatus for cooling air within a room: a refrigeration system including an evaporator, a condensing unit and control means capable of manual adjustment to initiate and to terminate operation of said unit; a housing provided with a plurality of compartments, one of said compartments defining an air-conditioning chamber enclosing said evaporator and having inlet means to admit air into said chamber, another of said compartments defining a plenum chamber communicating with the air-conditioning chamber to receive air discharged therefrom, said plenum chamber having outlet means capable of manual adjustment to direct air from the plenum chamber selectively either into the room to be cooled or out of said room; still another of said compartments defining a machinery chamber enclosing said condensing unit and provided with means for circulating air, including the air directed out of the room, in heat exchange relation with said unit and for rejecting such air to the outdoors; and, mechanism including means operable to effect automatic adjustment of the condensing-unit control means to interrupt operation of said unit upon manual adjustment of said outlet means to direct air from the plenum chamber out of the room, and operable to effect automatic adjustment of said outlet means to direct such air into the room upon manual adjustment of said control means to initiate operation of the condensing unit.

7. In an air-conditioning apparatus: an air chamber; refrigerating means operable to condition the air in said chamber; and control mechanism including means operable to stop the operation of the refrigerating means, to prevent communication between said chamber and the inside of a room, and to establish communication between said chamber and the outside of the room, and also operable to prevent communication between said chamber and the outside of the room, to establish communication between said chamber and the inside of the room, and to start the operation of said refrigerating means.

8. In an air-conditioning apparatus: an air chamber having a first outlet adapted to provide for the discharge of air into a room, and a second outlet adapted to provide for the discharge of air out of the room; refrigerating means operable to condition the air in said chamber; and control mechanism including means operable to stop the operation of the refrigerating means, to close said first outlet and to open said second outlet, and also operable to start operation of the refrigerating means, to open said first outlet and to close said second outlet.

9. In an air-conditioning apparatus: an air chamber having a first outlet adapted to provide for discharge of air into a room, and a second outlet adapted to provide for the discharge of air out of the room; a damper structure movable to close either of said outlets; refrigerating means operable to condition the air in said chamber; a control adjustable to start and to stop the operation of said refrigerating means; and instrumentalities disposed in cooperative relationship with said structure and control and operative to adjust said control to stop the operation of the refrigerating means in response to movement of said structure to close said first outlet, and also operative to move said structure to close said second outlet in response to adjustment of said control to start the operation of the refrigerating means.

MATSON C. TERRY.

REFERENCES CITED

The following references are of record in the file of this patent:

UNITED STATES PATENTS

Number	Name	Date
2,290,973	Jewell	July 28, 1942
2,332,730	Kucher	Oct. 26, 1943
2,343,121	Emerhart	Feb. 29, 1944