June 1, 1948. M. S. MERRILL ET AL 2,442,425

FRAME STRAIGHTENING APPARATUS FOR AUTOMOBILES

Filed Feb. 16, 1942 3 Sheets-Sheet 1

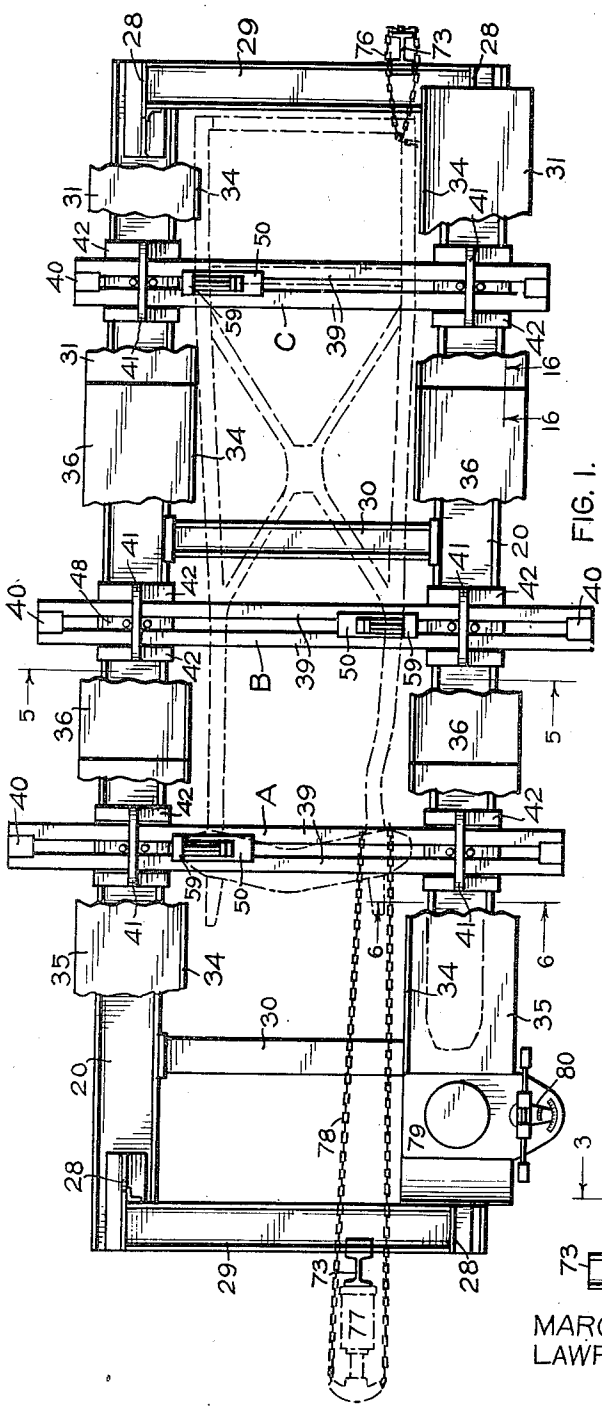

FIG. 1.

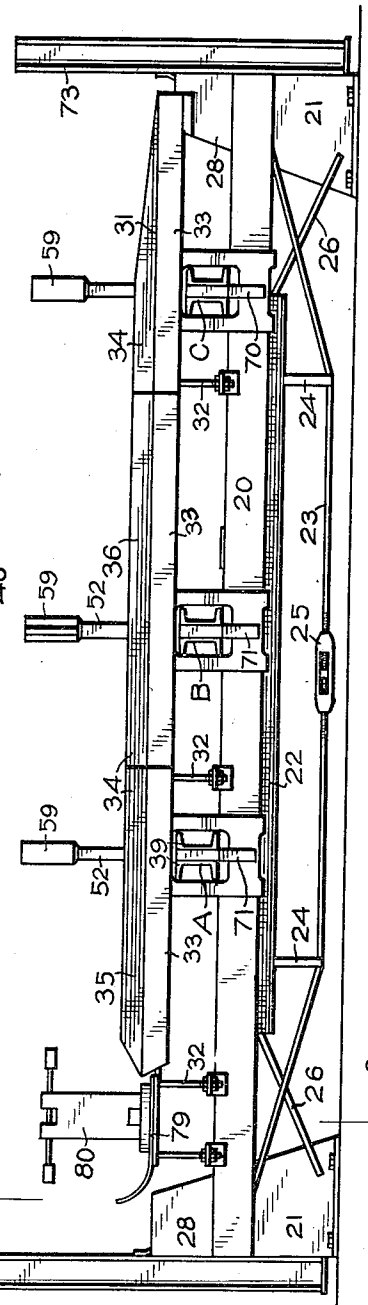

FIG. 2.

MARCELLUS S. MERRILL,
LAWRENCE W. ALFRED,
INVENTORS,

BY WHITEHEAD & VOGL
ATTORNEYS

PER Carle Whitehead

June 1, 1948. M. S. MERRILL ET AL 2,442,425

FRAME STRAIGHTENING APPARATUS FOR AUTOMOBILES

Filed Feb. 16, 1942 3 Sheets-Sheet 2

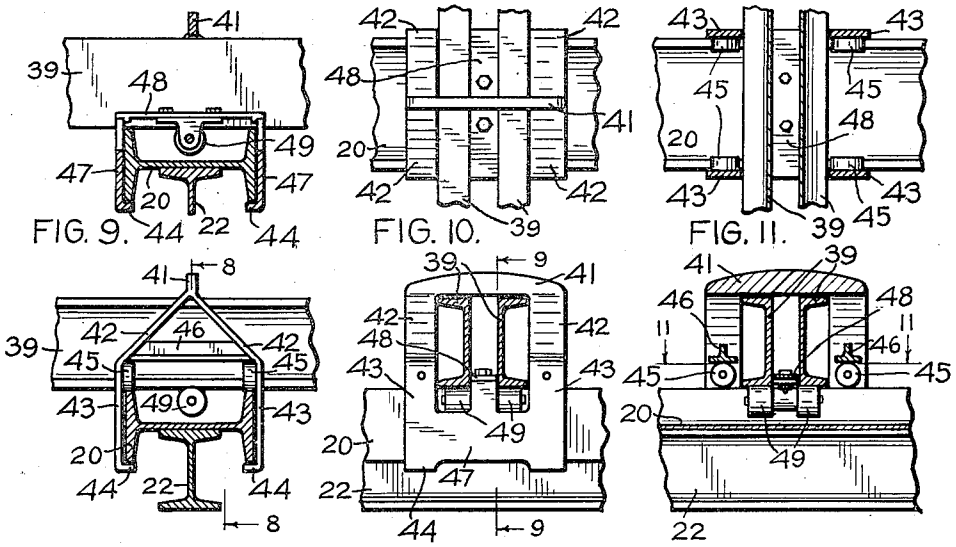

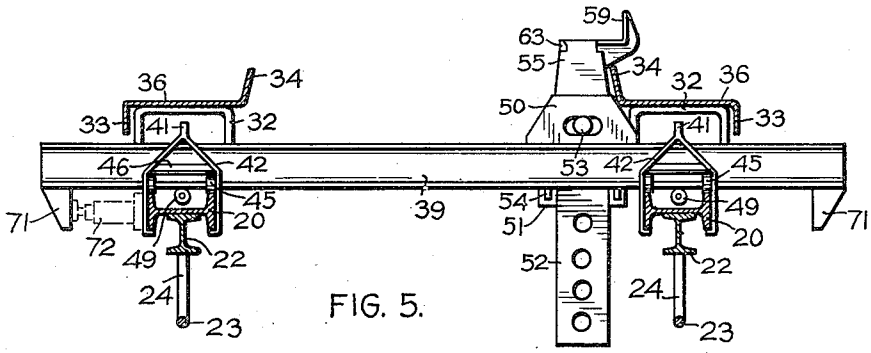

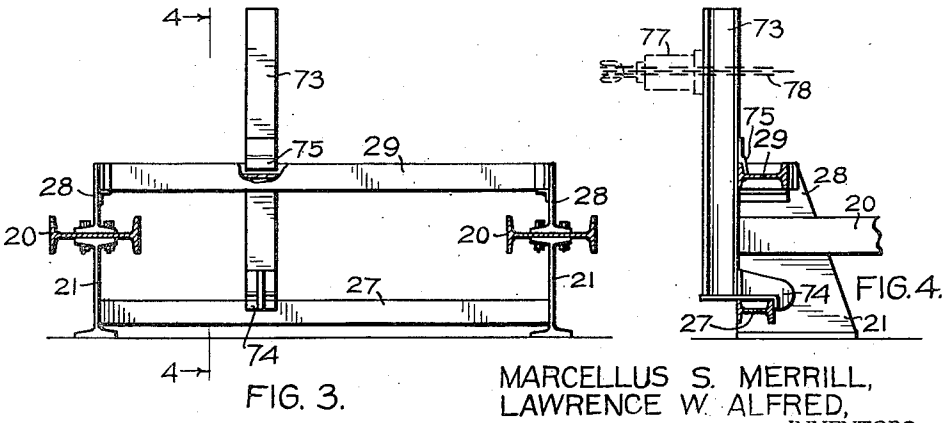

MARCELLUS S. MERRILL,
LAWRENCE W. ALFRED,
INVENTORS,

BY WHITEHEAD & VOGL
ATTORNEYS

PER Carle Whitehead

June 1, 1948. M. S. MERRILL ET AL 2,442,425

FRAME STRAIGHTENING APPARATUS FOR AUTOMOBILES

Filed Feb. 16, 1942 3 Sheets-Sheet 3

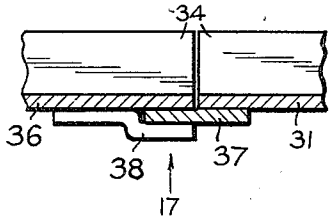

FIG. 16.

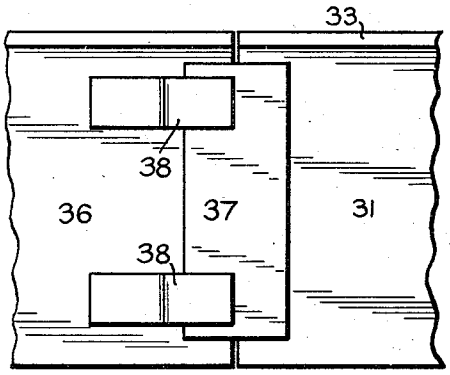

FIG. 17.

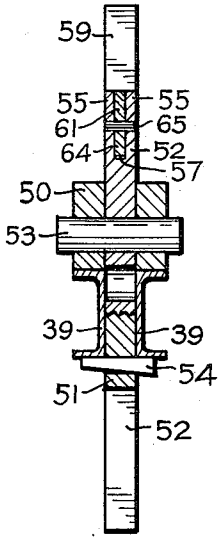

FIG. 13.

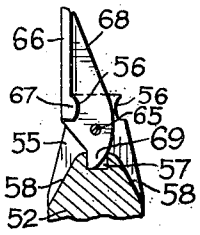

FIG. 15.

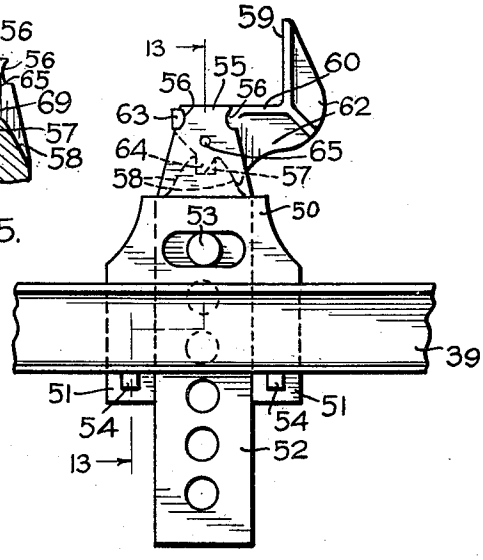

FIG. 12.

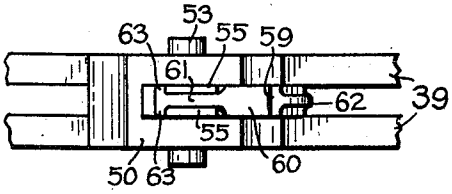

FIG. 14.

MARCELLUS S. MERRILL,
LAWRENCE W. ALFRED,
INVENTORS,

BY WHITEHEAD & VOGL
ATTORNEYS

PER Earle Whitehead

Patented June 1, 1948 2,442,425

UNITED STATES PATENT OFFICE

2,442,425

FRAME STRAIGHTENING APPARATUS FOR AUTOMOBILES

Marcellus S. Merrill and Lawrence W. Alfred, Denver, Colo.

Application February 16, 1942, Serial No. 431,004

1 Claim. (Cl. 153—32)

1

This invention relates to apparatus for straightening frames of automobiles and like vehicles, and is an improvement on and a development from the apparatus disclosed in Patent No. 2,013,785, issued to Marcellus S. Merrill, September 10, 1935.

An object of the present invention is to provide, in a unitary apparatus and with a minimum number of constituent elements, frame-straightening apparatus operable to correct any deformation or displacement of a vehicle frame, without disassembling the vehicle, applying heat to the members to be straightened, or in any way changing the normal wheel-supported attitude of the vehicle.

A further object of the invention is to provide improved apparatus of the character described, particularly designed to facilitate convenient access to the elements of the vehicle to be worked upon and to portions of the apparatus beneath the vehicle when in position in the apparatus.

A further object of the invention is to provide improved apparatus of the character described, which is designed to receive and operate upon wide vehicle frames of the type now commonly in use.

A further object of the invention is to provide improved apparatus of the character described, adapted for the application, either separately or coincidently of longitudinal as well as transverse stresses to a vehicle frame.

A further object of the invention is to provide an improved construction and arrangement of elements in apparatus of the character described, whereby certain movable elements are resiliently mounted to normally roll relative to their supporting elements in a manner which permits of positive, direct, supporting engagement between said members when pressures are applied to one thereof.

A further object of the invention is to provide an improved construction of mounting for pressure-transmitting jaw elements designed for engagement against vehicle frames to be straightened.

A further object of the invention is to provide an improved method for correcting bent, racked, distorted, deformed, twisted and sagged vehicle frames.

With these and other objects in view, as will more fully appear from the following specification and as illustrated in the accompanying drawings, the invention comprises certain novel constructions, combinations and arrangements of parts as will now be described in this specification and defined in the appended claim and as illustrated in the accompanying drawings, which are for illustrative purposes only and not intended as a definition or limitation of the invention, in which like characters of reference indicate corresponding parts throughout and in which—

2

Fig. 1 is a plan view of a preferred embodiment of our improved apparatus as assembled and positioned for practical use, certain elements of the assembly being broken away to better disclose otherwise concealed construction, a typical vehicle frame being indicated by broken lines in operative relation with the apparatus.

Fig. 2 is a side elevation of the apparatus shown in Fig. 1.

Fig. 3 is a cross-section taken on the indicated line 3—3 of Fig. 2.

Fig. 4 is a cross-section taken on the indicated line 4—4 of Fig. 3.

Fig. 5 is a cross-section taken on the indicated line 5—5 of Fig. 1.

Fig. 6 is a fragmentary, detail section, on an enlarged scale, taken on the indicated line 6—6 of Fig. 1.

Fig. 7 is a fragmentary, detail elevation, partly in section, of and at right angles to the showing of Fig. 6.

Fig. 8 is a cross-section taken on the indicated line 8—8 of Fig. 6.

Fig. 9 is a cross-section taken on the indicated line 9—9 of Fig. 7.

Fig. 10 is a plan view of the showing of Fig. 7.

Fig. 11 is a cross-section taken on the indicated line 11—11 of Fig. 8.

Fig. 12 is a fragmentary, detail elevation of a typical, adjustable frame-engaging jaw assembly advantageously employed in the invention.

Fig. 13 is a cross-section taken on the indicated line 13—13 of Fig. 12.

Fig. 14 is a top plan view of the construction shown in Fig. 12.

Fig. 15 is a fragmentary, detail view, partly in section, of a frame-engaging jaw employable alternatively to that shown in Fig. 12.

Fig. 16 is a fragmentary, detail section taken on the indicated line 16—16 of Fig. 1.

Fig. 17 is a bottom view of the construction shown in Fig. 16.

The elements constituting the improved apparatus are operatively associated with and carried by a rigid frame or base, suitably formed in any desired manner to present the essential characteristics and relationships. As shown in the drawings, the supporting frame or base includes a

pair of girders 20, preferably of I-beam type, horizontally disposed in spaced parallelism, with their flanges vertical and their web portions consequently horizontal. The girders 20 have a length somewhat in excess of the wheel base of the vehicle or vehicles to be worked upon, and are suitably supported in somewhat spaced relation above the ground line or supporting floor by web posts 21, rising in fixed relation from the floor or ground line and fixedly engaging with and beneath each end of each girder 20, being illustrated as one convenient means for securely mounting and positioning said girders.

Since central portions of the girders 20 will be subjected, during operation of the apparatus, to loads and stresses tending to deflect the girders out of normal position, some means should be provided for stiffening and reinforcing said girders intermediate their ends, a convenient arrangement for such purpose being shown as comprising a relatively shorter and lighter I-beam 22 disposed longitudinally beneath the web of each girder 20, with the web of the beam 22 vertical and its top flange bearing beneath the web of the corresponding girder 20, and a truss 23 connected between opposite ends of each girder 20 in engagement with the lower ends of struts 24 which bear at their upper ends against the lower flange of the beam 22. A turnbuckle 25 is preferably included in the truss 23, as is common practice. To minimize longitudinal racking of the girders 20 relative to their posts 21, braces 26 may be positioned to engage between lower portions of said posts and inwardly intermediate portions of the associated girder 20.

The web posts 21 at each end of the base assembly are rigidly interconnected and held in the desired spaced relation by means of beams 27, preferably of I-beam type, disposed with their web portions horizontal. Supplemental web posts 28 are fixed to rise from the ends of the girders 20 immediately above the posts 21, and upper portions of said posts 28 are rigidly interconnected and held by means of I-beams 29 parallel with and in spaced relation above the beams 27. Intermediate portions of the girders 20 may be held against lateral displacement by means of transverse braces or struts 30, spaced longitudinally of the assembly in such number and relationship as may be practicable and desirable, said braces 30 bridging the spaces between girders 20 and being secured at their ends to inner flanges of the girders.

Each of the girders 20 supports a rack adapted to be engaged by the wheels of the vehicle, which is thereby supported on and above the base. The racks each consist of a rear section 31 comprising a relatively wide, flat, tread portion, horizontally disposed in longitudinal alignment with and in spaced parallelism above the corresponding girder 20 and fixedly supported in the specified relation by engagement of its rear end with a bracket carried by the upper end of the adjacent post 28 and engagement of its forward end with the stirrup 32 fixed to and rising from the girder 20, and the tread section 31 is stiffened and completed by an outer down-turned, marginal flange 33, and an inner, upwardly-turned marginal flange 34, which latter flange serves to retain the vehicle wheels on the tread portion of the rack.

The forward section 35 of the rack is formed with a tread portion and marginal flanges corresponding with the like elements of the section 31, and is spaced some distance forwardly along the

girder 20 from said section 31 and fixedly supported in longitudinal alignment with and in spaced parallelism above said girder by means of stirrups 32 fixedly rising from said girder to engage the tread portion of said section. The space between the rack sections 31 and 35 is normally bridged by means of a rack section 36 corresponding in cross-section with sections 31 and 35 and removably cooperating with the inner ends of said sections to complete the rack. The section 36 may be engaged with sections 31 and 35 in any suitable or desired manner, a convenient arrangement being illustrated in Figs. 16 and 17 as comprising a bearing plate 37 offset somewhat beneath and extending outwardly from adjacent ends of the sections 31 and 35 to receive and support end tread portions of the section 36, and clips 38 fixed to the under side of the tread of the section 36 in position to engage about and beneath the plate 37. With the arrangement shown and described, the section 36 may conveniently be removed laterally from between sections 31 and 35, and is conveniently replaced, the removable character of said section 36 facilitating use of the apparatus and permitting convenient access beneath a vehicle supported by the racks, and also accommodating adjustment of movable elements of the apparatus for use on and with vehicle frames wider than the space between the inner margins of the racks. Inclined arms, not shown, may extend at any suitable angle and in any suitable adjustable relation from rear ends of the rack section 31 to engagement with the floor or ground, so that a vehicle may be rolled or driven over said arms to position on the rack assembly, the rack section 36 obviously being in place between the sections 31 and 35 during such operation.

A plurality of similar assemblies, in this instance three in number, are shiftably and adjustably associated with the base for the purpose of engaging the frame to be straightened and holding or applying pressure to selected points on such frame. Such assemblies are structurally and functionally substantially identical, hence a description of one should suffice for all. Each of the said assemblies includes a rigid member disposed transversely of, above, and in bridging relation between the girders 20, and said rigid member is shown as preferably formed of a pair of channel bars 39 disposed with their webs vertical and rigidly interconnected by blocks 40 between theirs ends, in spaced, parallel relation, with their flanges extending outwardly. The rigid member thus formed is mounted to move longitudinally along the girders 20, and to itself be shifted longitudinally, transversely of said girders, through the agency of hangers, one of which is hereinafter specifically described. Each of the hangers comprises a yoke bar 41 adapted to bridge across and engage over the upper flanges of the channel bars 39, a pair of yoke arms 42 depending in diverging relation from each end of the bar 41 across the flange members of each channel bar 39, an extension 43 on each yoke arm 42 angularly related with its associated arm and vertically disposed to lie closely along and across the corresponding outer face of the vertical flanges of the girder 20, and an inwardly-turned lug 44 on the lower end of each extension 43 beneath and in position to engage at times against the lower margins of said girder flanges.

The yoke arm extensions 43 extend somewhat above the lower flanges of the channel bars 39.

and pivotally support, adjacent their junction with the yoke arms 42, rollers 45 disposed to bear against and roll along the upper margins of the flanges of the girder 20, and a brace 46 rigidly connects the diverging yoke arms 42 immediately above the rollers 45 to stiffen the assembly. The lower portions of the extensions 43 on the same side of the girder 20 are connected by means of a web 47 which is formed with a centrally-disposed lug positioned to rise along the girder flange and engage between the channel bars 39. A relatively stiff, flat spring member 48 is disposed between the channel bars 39 and is supported on and in bridging relation between the lugs of the webs 47 on opposite sides of the girder 20, said member 48 being thus positioned above and transversely across said girder. A suitable bracket is fixed to and depends from the mid portion of member 48 and supports a shaft transversely of and beneath the lower flanges of the channel bars 39, and rollers 49 are carried by opposite ends of said shaft in position to engage beneath and roll along said lower flanges of said channel bars. The spacing of the elements comprising the hanger, illustrated and above described, is such as to normally support the channel bars 39 on the rollers 49 in clearing relation with the flanges of the girder 20 and in clearing relation with the yoke bar 41, so that, a hanger assembly being provided where each channel bar unit crosses a girder 20, said channel bar unit may be freely moved longitudinally, and hence transversely of the base frame. Similarly, the lugs 44 extend beneath the girder flanges in clearing relation therewith, so that the hanger and its supported channel bar unit may be freely moved longitudinally along the girders while the load is supported by the rollers 45 engaging against upper margins of the girder flanges. When, for any reason, pressures are applied to the channel bar assembly tending to lift the unit away from the girders 20, the upper flanges of the channel bars engage the yoke bar 41, while the lugs 44 are drawn into engagement with the lower margins of the girder flanges, thus limiting any separation between the girders and the channel bars. Conversely, any pressures applied to the channel bar unit tending to move said unit into engagement with the girders 20 is fully accommodated by the yieldable character of the member 48, said member deflecting in response to loads above normal so as to permit the lower flanges of the channel bar unit to engage directly against and be supported by upper margins of the girder flanges, the shaft and bracket supporting the rollers 49 thus being relieved of loads greater than the weight of the channel bar unit and associated elements.

The rigid, channel bar members of the shiftable assemblies above described are indicated in Figs. 1 and 2 at A, B and C. The members A and B are shown as of substantially the same length, which is considerably in excess of the span between the girders 20, and as being normally disposed across and for travel along central portions of the girders 20, while the member C is shown as having a length only a little greater than is necessary to bridge the girders 20 and as positioned adjacent the rear or loading end of the base frame.

Whatever be the relative length or disposition of the rigid members A, B and C, each of said members is provided with laterally and vertically adjustable means for engaging elements of a vehicle frame to be straightened. In the arrangement shown, the adjustable means carried by members A, B and C is the same in each instance, and is shown as comprising a head block 50 arranged to bear upon and slide along upper flanges of the channel bars 39 of the rigid member and formed with centrally depending, spaced tongues 51 which engage between and project below the channel bars 39 to slidably position the block 50. The spacing between the tongues 51 is continued as an angular opening upwardly through the block 50 and serves as a slide bearing wherein a strut bar 52 is reciprocably accommodated. Lateral openings in the side of the block 50 intersect the slide bearing therein and are adapted to successively register with holes spaced longitudinally along the bar 52 being provided to receive a pin 53 whereby the altitudinal position of the bar 52 relative to block 50 may be selectively adjusted.

It is necessary at times that the block 50 be held against displacement longitudinally of its supporting channel bars 39 and a convenient arrangement for this purpose is found in the provision of holes through the portions of the tongues 51 projecting below the channel bars 39 and wedges 54 adapted to seat in said holes and clampably engage the lower flanges of the bars 39. The upper end of the bar 52 is formed as a seat for interchangeable jaws adapted to directly engage the vehicle frame members, and the arrangement illustrated and hereinabove described is particularly advantageous in that it provides for convenient interchange of specific jaws without the use of tools, in that it permits reversal in the direction of jaw mounting, and in that it provides an adequate and positive bearing for the jaw portions subjected to high pressures. As shown, the upper end of the bar 52 is tapered upwardly and slotted to form a pair of upstanding ears 55, each of which is provided with an arcuate notch 56 in its opposite narrow margins and immediately adjacent its upper end. The base of the slot between the ears 55 is formed with an upwardly-opening, centrally-disposed, angular recess 57, and the portion of the bar 52 on opposite sides of said recess 57 between the ears 55 is beveled outwardly and downwardly to provide bearing surfaces 58.

The jaw shown in Fig. 12 is of angular, offset type and includes an upstanding bearing web 59 in perpendicular relation with one end of a seat 60 formed with a tongue extension 61 (Fig. 13) of a size to be received between the ears 55. The web 59 and seat 60 are suitably reinforced by means of flanges 62, one of which extends beneath the seat 60 to terminate in a bearing margin adapted to engage against one of the surfaces 58, and the tongue extension 61 is formed with laterally-projecting, arcuate lugs 63 on its free end disposed to engage in the arcuate notches 56 opposite to the surface 58 engaged by the flange 62. A lower forward portion of the margin of the tongue extension 67 received between the ears 55 may be formed as a projecting lug 64 positioned and contoured to engage within and bear against one side margin of the angular notch 57 when the jaw is mounted between the ears 55, and a pin 65 engages through registering apertures in said ears 55 and the tongue extension 61 to hold the jaw against displacement from its seat, accidentally or otherwise as, for example, by an upward pull in case of use of a hooked jaw to exert a downward pull as illustrated at Fig. 12 of said Patent No. 2,013,785.

With the construction shown and described, it

is apparent that the jaw may be readily removed from and replaced on its seat on the bar 52 when the pin 65 is removed, the symmetrical character of the seat portion on the bar 52 being provided to permit mounting of the jaw with its web 59 facing in either of two directions. Pressures applied to the vertical face of the web 59 or to the horizontal face of the seat 60 are transmitted through the jaw flange, arcuate lugs, and lug 64 to the bearing surfaces of the jaw seat, and there is hence no shear effect on the pin 65. The jaw shown in Fig. 15 presents a vertical or upstanding flat web 66 formed with arcuate ribs 67 adjacent its lower margin for engagement with the arcuate notches 56 of the ears 55, and a flange 68 perpendicular to the web 66 for engagement between the ears 55, said flange 68 being extended below the ribs 67 and terminating in a finger 69 contoured and positioned for engagement with the angular recess 57 of the jaw seat, said flange 68 being apertured to receive and position pin 65 in the manner and for the purpose previously set forth.

The apparatus thus far described may be utilized in a well known manner for the straightening of vehicle frame members. The vehicle may be positioned on the supporting rack sections 34 and 35, the rack section 36 removed, and the jaws carried by the strut bars 52 on the respective rigid members A, B and C elevated and moved along their respective members to engagement with suitable points of the vehicle frame, whereafter the head blocks 50 are wedged against travel relative to their associated rigid members, and pressure is applied to move one or more of said rigid members transversely of the girders 20 for the application of corrective pressure to the vehicle frame. The rigid member C is preferably held against travel transversely of the girders 20 by any suitable means as stops or abutments 70 projecting below the outer ends of its channel bars 39 for engagement against the webs 47 of its hangers, and the jaw carried by said member C is hence generally employed to position and hold the corresponding end of the vehicle frame against lateral displacement. The rigid members A and B are provided with abutments 71 which fixedly depend from the opposite ends of said members and provide bearings for one end of the jack 72 or other pressure means, engaging between a selected abutment 71 and the adjacent outer flange of a girder 20, so that extension of the jack 72 operates to urge the associated rigid member longitudinally and for the application of pressure, by a suitably positioned jaw, to a selected point on the vehicle frame.

While the apparatus thus far described is novel in construction and characterized by features of practical advantage, the invention contemplates improvement in the normal technique of frame straightening through the application of corrective influences which operate to reverse the factors which caused distortion of the frame and thereby more perfectly rehabilitate the damaged structure. The improvement in method includes the coincident application of two forces to the frame member to be straightened, which forces act at substantial right angles to each other. The corrective forces are applied in such manner as to place the damaged frame member under stress tending to return it to normal and to simultaneously pressure-urge the damaged structure back to its original position.

For the purpose above specified, rigid posts 73 are slidably, and removably, associated with the opposite ends of the base frame, said posts being shown as of I-beam type, each formed with an offset hook 74 on its lower end adapted to engage over and hook against the inner flange of the end beam 27 and a clip 75 adapted to engage over the outer upper flange of the corresponding beam 29, whereby a post 73 may conveniently and removably be hooked to and in upstanding relation with the ends of the base frame. It is the function of one of the posts 73 to serve as an anchor to which one end of the vehicle frame, or one portion of such end, may be secured by a suitable inextensible fastening such as a chain 76, while the other of said posts 73 serves as an abutment against which the pressure of a jack 77 may react to apply tension to an inextensible connection, such as a chain 78, engaging about the movable element of said jack and connecting with that end portion of the vehicle frame which is remote from the fastening 76. In utilizing the arrangement above described, extension of the jack 77 is developed to apply a considerable longitudinal stress on the frame member or portion engaged between the connections 76 and 78, whereafter lateral pressure may be correctively applied to the damaged frame member through longitudinal displacement of the properly-placed rigid member A or B, in the manner above set forth, the combined longitudinal stress and lateral pressure operating to urge the deformed frame into its original position and accomplishing the desired correction through a direct reversal of the forces and stresses which produced the deformation.

Forward ends of the rack sections 35 may adjoin suitable wheel-engageable extensions 79 which support wheel-aligning devices 80; it being generally desirable and frequently essential that the steerable wheels of the vehicle be realigned as an incident of or subsequent to straightening of the vehicle frame. The wheel aligning devices 80 are illustrated conventionally, since in themselves they form no part of the instant invention.

While the improved apparatus and method have been described principally in connection with the application of lateral and longitudinal stresses in a horizontal plane, it should be readily apparent that pressures and stresses may be correctively applied to vehicle frames in other planes and directions as may be necessary for rehabilitation of a frame assembly. For example, certain of the strut bars 52 may be connected by suitable jaws (such as illustrated at Fig. 13 of said Patent 2,013,785) or otherwise, to hold vehicle frame portions against vertical displacement while a jack member is utilized for the application of vertically-directed pressure to some other point of the frame, proper longitudinal stress being simultaneously imposed on the frame portion under correction in substantially the manner previously set forth. Additionally, the connection 76 may engage one corner of a frame while the connection 78 engages a diagonally opposite corner thereof, so that the longitudinal stress applied to the jack 77 may act with a twisting or torsional effect, where such is indicated for frame correction.

Since many changes, variations, modifications and adaptations in the specific form, construction, arrangement, and utilization of the apparatus shown and described may be employed without departing from the spirit of the invention we wish to be understood as being limited solely

by the scope of the appended claim rather than by any details of the illustrative showing and foregoing description.

We claim:

In apparatus of the character described, a rigid base frame including spaced, parallel, horizontally-disposed side members and posts supporting the ends of said side members, upper and lower, transverse, parallel members connecting between said posts and between corresponding ends of said side members, means for supporting a vehicle above said side members, a plurality of units independently shiftably longitudinally of said side members and each engageable with a vehicle frame for the application of transverse pressures thereto, and a rigid, upstanding post removably engageable with the transverse members at each end of said base frame and adjustable longitudinally of said transverse members for the application of tensile stresses to the vehicle frame members simultaneously with the application of transverse pressure thereto.

MARCELLUS S. MERRILL.
LAWRENCE W. ALFRED.

REFERENCES CITED

The following references are of record in the file of this patent:

UNITED STATES PATENTS

Number	Name	Date
1,507,695	Tempelman	Sept. 9, 1924
1,676,263	Hawkins	July 10, 1928
1,773,187	Johnson	Aug. 19, 1930
1,785,923	Wade	Dec. 23, 1930
1,794,840	Keyworth	Aug. 3, 1931
1,822,325	Swayne	Sept. 8, 1931
1,836,369	Friese	Dec. 15, 1931
1,879,979	Countryman	Sept. 27, 1932
1,889,187	Wochner	Nov. 29, 1932
1,907,925	Wochner	May 9, 1933
1,993,387	Smith	Mar. 5, 1935
2,013,785	Merrill	Sept. 10, 1935
2,059,972	Smith	Nov. 3, 1936
2,069,249	Hunt	Feb. 2, 1937
2,095,071	Loeb	Oct. 5, 1937
2,140,686	Bennett	Dec. 20, 1938
2,198,434	Fried	Apr. 23, 1940
2,227,476	Williams	Jan. 7, 1941
2,244,934	Bennett	June 10, 1941