Jan. 20, 1948. F. M. TURNBULL ET AL 2,434,875

JETTING DEVICE

Filed Aug. 11, 1945 2 Sheets-Sheet 1

Fig. 1.

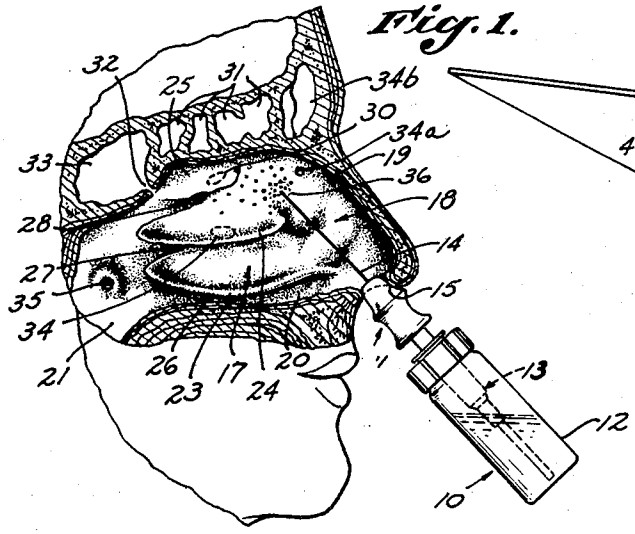

Fig. 2.

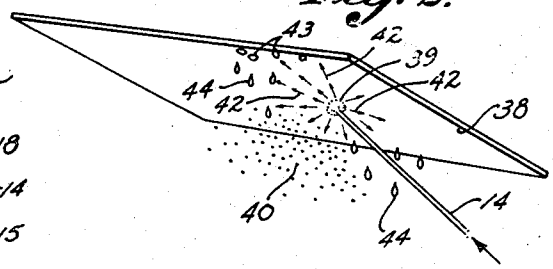

Fig. 5.

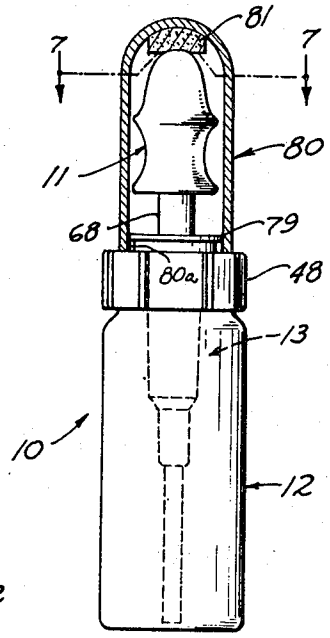

Fig. 3.

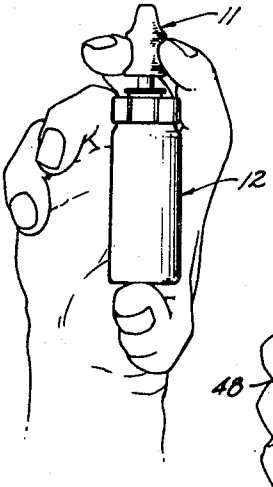

Fig. 4.

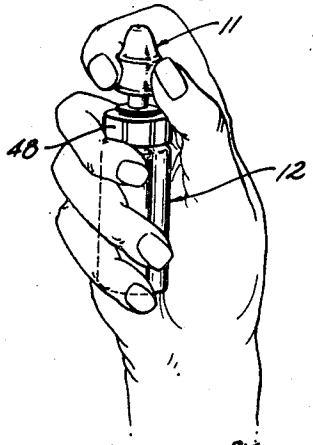

INVENTORS:
FREDERICK M. TURNBULL,
WILLIAM F. HAMILTON,
BY HARRIS, KIECH, FOSTER & HARRIS,

Terence F. Kiech

FOR THE FIRM
ATTORNEYS.

Jan. 20, 1948. F. M. TURNBULL ET AL 2,434,875

JETTING DEVICE

Filed Aug. 11, 1945 2 Sheets-Sheet 2

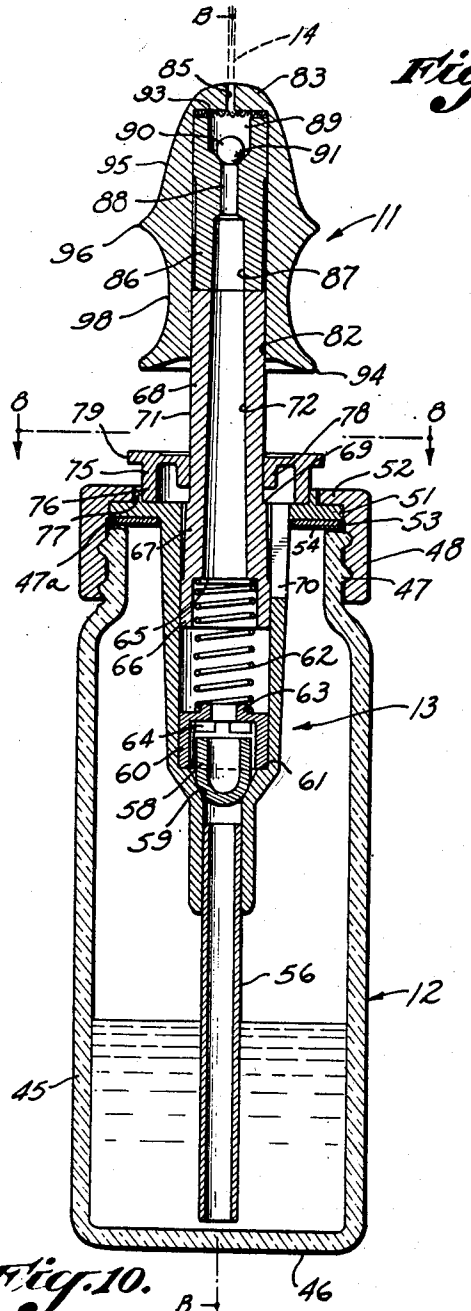

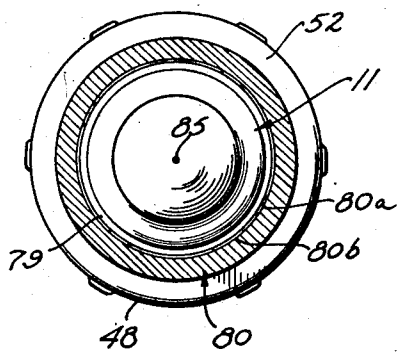

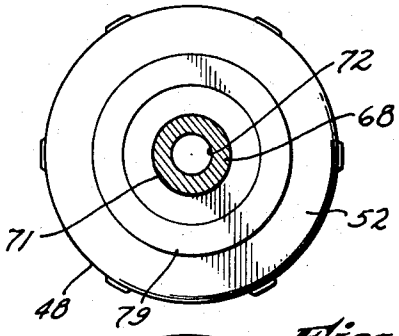

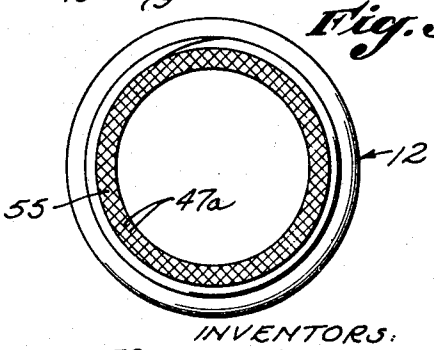

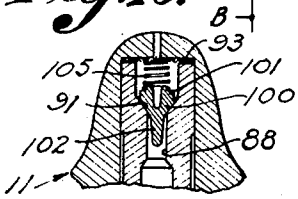

INVENTORS:
FREDERICK M. TURNBULL,
WILLIAM F. HAMILTON,
BY HARRIS, KIECH, FOSTER & HARRIS,

Clarence F. Kiech

FOR THE FIRM
ATTORNEYS.

Patented Jan. 20, 1948 2,434,875

UNITED STATES PATENT OFFICE

2,434,875

JETTING DEVICE

Frederick M. Turnbull, Los Angeles, and William F. Hamilton, Altadena, Calif.; said Hamilton assignor to said Turnbull

Application August 11, 1945, Serial No. 610,310

3 Claims. (Cl. 128—250)

1

Our invention relates to liquid jetting devices, particularly to a compact, highly directional device for projecting a needle-like jet of liquid in a direction axially of the device. The invention will be described particularly with reference to its use as a nasal medicator for introducing metered quantities of a liquid medicament into the upper part of the nasal cavity to relieve the congestion of the nasal membranes caused by infections, allergy, hay-fever, etc.; mechanical irritations or physical discomforts arising from dust, sudden change in altitude, etc.; or chemical irritations caused by fumes, etc.

It is an object of the present invention to provide a device having several or all of the following features, to wit, a device which is (1) highly directional and self-directional to direct the medicament automatically to a position high in the nose to reach the seat of the usual nasal infections; (2) readily portable in the sense that it is small and can be easily carried in a pocket or handbag to be available for inconspicuous nasal treatment when needed; (3) precise and capable of delivering a measured dosage of medicaments such as the sulfas, penicillin, vasoconstrictors, or other drugs which should be used in limited doses; (4) sanitary in the sense that the applicator and the medicament can be kept free from contamination; (5) leak-proof to the extent that the device can be carried in any position without danger of leakage, this being true to a large extent even during substantial changes in atmospheric pressure, as during airplane flights; (6) substantially unbreakable, all of the exposed portions of the device being preferably made of plastics; and (7) substantially non-clogging. The importance of these features and their absence from medication devices heretofore known will be apparent from inspection of conventional medicine droppers and atomizers.

To aid in the relieving of infections, often resulting in nasal congestions as in the common nose cold, it is essential to best results that the medicament reach and wet the nasal membranes high in the nose, to wit, in the upper sinus areas, these membranes being at positions disposed substantial distances from the nostril and reached through narrow channels difficult of access by ordinary methods.

The present invention contemplates nasal medication by jetting a measured amount of medicament in a small and usually needle-like stream into the nasal passage to impinge upon the upper interior surfaces. The velocity of impingement is such that the stream breaks up to form a mist-like spray portion comprising a myriad of small droplets of large surface-to-volume ratio which drift from, or are propelled away from, the surface of impingement, migrating through the existing atmosphere to deposit upon and wet other

2

portions of the nasal passage. Thus, the liquid medicament reaches the impingement surface as a jet but then sprays and trickles over the walls of the turbinates into the meati to reach the ostia and the orifice of the Eustachian tube. If the medicament has a vasoconstrictive action, the nasal passage is quickly cleared or decongested.

It is an object of the invention to provide a novel device for nasal medication which jets a small and usually needle-like stream of medicament into the nasal passage and which device is substantially self-directional in the sense that its use, even in non-professional hands, will automatically direct the stream of medicament toward the upper sinus areas.

It is another object of the invention to provide a novel applicator or head shaped to engage the anterior naris or nostril and shaped to limit insertion of the head into the nostril to avoid injury to the nasal tissues.

A further object of the invention is to associate such a head with a pumping mechanism and a liquid container in such way that relative movement between the head toward the container will actuate the pumping mechanism and produce the stream.

Still a further object of the invention is to provide a device with such a head and which is operable to project the stream into the nostril, either by bodily movement of the container toward the nostril while the head fits therein or by finger-induced relative movement between the head and the bottle.

A further object of the invention is to provide a device which is sanitary, in that the head can be easily cleaned, and which prevents contamination of the medicament.

It should be understood, however, that the invention is not limited exclusively to the art of nasal medication. It finds wide usage by doctors, technicians, or artisans in the projection of a minute needle-like liquid jet for general uses and also to remote or difficultly-accessible positions.

In general, it is an object of the invention to provide a liquid jetting device in which the axis of the jet is along the longitudinal axis of the device, whereby this longitudinal axis indicates or predetermines the direction of the jetted stream. The longitudinal axis of the device thus serves as an orienting axis, in contradistinction to those devices in which the direction of a stream or spray cannot be accurately predetermined.

It is an object of the invention to provide a device including pump elements relatively movable in the direction of the desired jet, and to provide a device in which the pump elements are respectively connected to a container and a head, relative movement between the head and container projecting liquid through an orifice of the head

in alignment with the direction of relative movement. Other objects lie in a novel construction of such a head and a novel association thereof with one of the pump elements.

It is also an object of the invention to provide a compact jetting device which can be operated by one hand.

Further objects and advantages will be apparent to those skilled in the art from the following description of an exemplary embodiment particularly applicable to nasal medication.

Referring to the drawings:

Fig. 1 is a vertical sectional view of the left nostril, taken just beyond the septum, showing diagrammatically some of the more important anatomical features of the nasal passage and showing the self-directional jetting device of the invention in operative position;

Fig. 2 is a diagrammatic view illustrating the action taking place when a needle-like jet strikes an inclined surface, and suggesting the mist-like dispersion as well as the paths of liquid flow along the surface;

Fig. 3 is a perspective view showing the preferred one-hand operation of the device;

Fig. 4 is a perspective view showing an alternative method of operating the device;

Fig. 5 is a side view of the device with its protective cover attached, this cover being shown in section;

Fig. 6 is an enlarged vertical sectional view of the device showing the pump elements in the position occupied near the start of the jet-producing action;

Fig. 7 is a cross sectional view, taken as indicated by the line 7—7 of Fig. 5;

Fig. 8 is a cross sectional view, taken along the line 8—8 of Fig. 6;

Fig. 9 is a top view of the container with the pump elements removed; and

Fig. 10 is an enlarged vertical sectional view of an alternative valve construction.

Referring particularly to Fig. 1, the jetting device of the invention is indicated generally by the numeral 10. It provides an applicator or head 11 of a form to be later described and which is movable axially of a bottle or container 12 to actuate a pump 13 in a manner to send a needle-like stream of medicament 14 into the nasal passage. The head 11 is adapted to contact the nostril or anterior naris 15, usually in a manner to seal the nasal passage against ingress or egress of air during the medicating operation.

In Fig. 1, the nasal passage is indicated generally by the numeral 17 and is bounded by the septum of the nose (not shown in Fig. 1), by the outer wall 18 of the nose, and by an upper wall 19 and a lower wall 20, the latter being formed by the hard and soft palates separating the nasal passage 17 from the mouth. The nasal passage 17 is shown as extending rearwardly to a passage 21 comprising the interior of the epipharynx.

Projecting into the nasal passage 17 are lower, middle, and upper turbinates 23, 24, and 25, respectively. The lower turbinate 23 is separated from the lower wall 20 by a space known as the lower meatus 26. The middle and upper turbinates are shown as overlapping slightly but provide therebetween a space opening on the nasal passage and known as the middle meatus 27. Similarly, a passage or space known as the upper meatus 28 opens on the main nasal passage and is positioned between the middle turbinate 24 and the upper turbinate 25. The meati 26, 27, and 28 are small, pocket-like spaces as distinct from

broad, open-mouthed depressions or passages, particularly when the nose is congested, and resist entry of a medicament approaching same as an airborne spray, as previously pointed out. Medicinal decongestion requires that the medicament, typically a solution having bactericidal and/or bacteriostatic and also a vasoconstrictive action, must reach the congested zone and, by penetration or gradual decongestion, reach the upper surfaces of the nasal passage, e. g., the medicament must reach the seat of the infection. In this respect it is desirable that the medicament reach and wet the surfaces bounding the turbinates and the meati, particularly the middle and upper meati 27 and 28. It is also desirable that the medicament reach various ostia opening on the meati. For example, the ostia of the ethmoid sinuses, indicated by the numeral 30, lead from the posterior ethmoid cells 31 and open on the upper meatus 28. Also openings on this upper meatus 28 is the ostium 32 of the sphenoid sinus 33. Opening on the middle meatus 27 is the ostium 34 of the maxillary sinus, also the ostia of the anterior ethmoids, not shown in Fig. 1 to avoid confusion, and the ostium 34a of the frontal sinus 34b. To the rear of the meati, the orifice 35 of the Eustachian tube opens on the passage 21.

It is important to the use of the invention as a nasal medicator that the needle-like stream of medicament 14 be directed toward the upper internal surfaces of the nose. When used for this purpose, the present invention is self-directional in the sense that its use practically automatically directs the stream 14 in the desired direction. It is preferable that the stream 14 strike the wall of the nasal passage near the bases of the middle and upper turbinates 24 and 25, it being particularly advantageous if the stream 14 impinges on a surface near the base of the middle turbinate 24, e. g., in or near a zone indicated by the dotted circle 36 of Fig. 1. Preferably, the stream 14 does not substantially diverge or break up into individual droplets prior to impingement near the zone 36. However, upon such impingement, the stream usually breaks up into a mist-like spray portion and a liquid portion. The minute droplets of such a mist-like spray move to and wet the exposed upper surfaces of the nasal cavity. That portion of the medicament which is not broken up into the mist-like spray, and which is termed hereinafter as the liquid portion, flows along the nasal surfaces from the vicinity of the zone 36, either because of the initial velocity of the stream 14 or because of gravitational action. In either instance, the contact of the medicament with the nasal surfaces tends to spread the medicament along the surfaces due to its wetting action. The net result is that the medicament sprays, flows, and trickles into the middle and upper meati 27 and 28 and reaches the walls of the three turbinates 23, 24, and 25. If the medicament has a vasoconstrictive action, it shrinks the turbinates and the tissues surrounding the various ostia. The medicament is conducted into and along the ostia by capillary action and opens the sinuses for drainage and ventilation. A portion of the medicament also reaches the orifice 35 of the Eustachian tube. The overall result is that the entire nasal passage and Eustachian tube are effectively cleared or decongested, and the ostia of the sinuses are open for ventilation and drainage of the sinuses themselves.

The action which takes place when the stream

14 impinges in or near the zone 36 is similar to that illustrated in Fig. 2, which shows the stream 14 directed at an acute angle toward a sloping surface 38, which may be considered as a surface of the nasal passage or a surface of some other body. When the still-integral stream 14 first impinges on the surface 38 in a zone indicated by dotted circle 39, a portion of the liquid breaks up into a mist-like spray. This spray can be observed against a dark background in an appropriate light. It is suggested in Fig. 2 by minute droplets 40 which are propelled from the zone 39 or which drift therefrom through the adjacent air. Another portion of the stream 14 appears not to be thus immediately subdivided and the forward velocity of the stream carries most of this liquid up the inclined surface 38 as a spreading film, although a smaller fraction of the liquid spreads sidewise and in a reverse direction to move film-wise from the zone 39. Such film-wise movement is suggested by arrows 42. As the film spreads, it becomes unstable and appears to break up in part to form surface-adhering droplets 43 which may drain gravitationally along the surface 38 or which may coalesce with other droplets to form larger masses which drop from the surface 38 in a rain-like manner, as suggested by drops 44, which fall freely to any surfaces therebeneath, e. g., to the surfaces, shown in Fig. 1, of the lower turbinate 23 along which such droplets move to enter and coat the walls of the lower meatus 26, or from which they drop to the lower wall 20.

Some such action takes place when the stream 14 impinges against a surface of the nasal passage, although the flows of liquid may be somewhat different than suggested in Fig. 2, depending upon the contour and slope of the impingement surface. However, irrespective of the particular action which takes place, it has been found clinically that this type of jetting action is unexpectedly beneficial in supplying medicament in wetting relationship with the upper internal surfaces of the nose to reach those areas of the nasal passage where the medicament is most needed and which often form the locus of any infection present. Best results arise from a stream 14 which does not substantially break up into droplets prior to impingement, namely, a stream which does not diverge substantially before impingement. However, some degree of divergence can be permitted, particularly if the velocity on impingement is sufficient to break up a portion of the medicament into a mist-like spray which penetrates the meati to reach the various ostia.

Previously, a needle-like stream 14 for nasal medication was neither commonly used nor, in fact, feasible. The present invention has been designed not only to produce the desired stream 14 but to make it self-directional in the sense that its use, even in non-professional hands, will automatically direct the stream toward the upper internal surfaces of the nose. This is accomplished by the particular design of the invention which, aided by its necessary mode of use in nasal medication, directs the stream substantially as suggested.

The details of the preferred embodiment of the invention are best shown in Figs. 5 to 8. Referring thereto and particularly to Fig. 6, the container 12 is preferably of the longitudinally-elongated type to provide a longitudinal axis, indicated generally by the dotted line B—B, and which aids in directionally predetermining the

needle-like stream 14, as well as in making the device self-directional when employed as a nasal applicator. This container is usually formed of a suitable plastic, preferably of the transparent type, for example polystyrene, although any material non-reactive with the medicament can be employed. It is of relatively small size, preferably of a size and shape to be retentively encompassed in the palm of the hand. It provides a side wall 45 closed by a bottom wall 46 and preferably provides an externally-threaded neck 47 terminating in an upper annular edge 47a extending substantially radially outward. The neck 47 receives an internally-threaded retaining member or cap 48 formed of a thermoplastic or thermosetting plastic, metal, or other material. The threaded engagement between the neck 47 and the cap 48 is merely exemplary of one form of attachment means, it being clear that other expedients can be employed.

The details of the pump 13 are not, per se, a part of the present invention. Various forms of pumps can be employed, such, for example, as those shown in the patents to Andrew M. Martin, Nos. 2,362,080 and 2,362,081. Fig. 6 illustrates certain details of the pumping structure of the former patent as this type of pump has been found very satisfactory as the pressuring source of the present invention. Generally speaking, the preferred embodiment of the present invention contemplates the use of a pump having two pump elements relatively movable along the axis B—B, one of the pump elements being connected to the container 12 and the other being connected to the head 11, whereby relative movement between the head and the container propels a pump-metered quantity of medicament from the head 11.

The pump shown in Fig. 6 includes a cylindrical barrel 50 having a flange 51 extending outward beneath an inwardly-extending flange 52 of the cap 48. The flange 51 extends outward a substantial distance across the upper annular edge 47a of the neck 47 and a sealing washer 53 is preferably disposed therebetween so that tightening of the cap 48 compresses the washer 53 against the neck 47 and also centers the barrel 50 in the container 12.

In accordance with the present invention, the washer 53 is preferably foil-coated cork to provide a deformable surface 54, usually formed by the foil, engaging the upper annular edge 47a. A very desirable breathing action, tending to equalize the internal and external pressures of the container, is obtained by roughening, knurling, or grooving the entire surface of the upper annular edge 47a, as suggested by the numeral 55 in Fig. 8. If the container 12 is formed of a material softening when heated, a hot file or other toothed tool may be pressed against the annular edge 47a to obtain the roughening, or other expedients can be employed. This forms minute depressions in the annular edge 47a which are usually in some predetermined pattern but which cooperate with the deformable surface 54 in providing a plurality of minute passages of sufficient size to permit a slow leakage of air tending to equalize internal and external pressures, but of insufficient size to permit gravitational flow of the liquid upon upturning the container or placing it on its side. If the surface 54 is not deformable or if the washer 53 is eliminated to permit the flange 51 to engage the roughened annular edge 47a, the engaging surface will merely bridge across the minute depressions without substantial deformation, and the depth thereof will determine the minimum size

of the minute passages. However, if the surface 54 is deformable, tightening of the cap 48 will force the crests of the roughened annular edge 47a slightly into the deformable surface 54 so that the size of the minute passages is reduced as the cap is tightened. With the usual manual tightening of the cap 48 to press the foil-coated washer 53 against the roughened annular edge 47a, minute depressions of a depth between about .025–.05 mm., or slightly more, will be found satisfactory with a liquid of about 40 centipoises. With other liquids, deeper or more shallow depressions will be desirable, depending on the physical properties of the liquid. When using a deformable surface 54, grooves of undue depth can be formed in the annular edge 47a and tightening of the cap 48 will decrease this depth to the desired amount by deforming the surface 54 to extend a distance into the grooves to decrease the size of the remaining passages. In practice, the cap 48 is tightened until there is no gravitational leakage of the liquid when the container is upturned or on its side, the size of the minute passages being then such as to admit a slow flow of air tending to equalize the internal and external pressures.

The lower end of the barrel 50 provides a reduced-diameter portion which receives the upper end of an intake tube 56 opening just above the bottom wall 46 of the container, the upper end of the tube 56 being suitably adhered to the reduced-diameter portion.

Near the lower end of the barrel 50 is an intake valve, shown as including a hollow valve member 58 having a hemispherical lower end adapted to seal against a conical valve seat 59 provided by the barrel 50 to resist movement of liquid from the interior of the barrel 50 through the intake tube 56 but to permit free reverse movement. The valve member 58 moves vertically in a cage 60 held in engagement with a shoulder 61 of the barrel 50 by a spring 62. The lower end of this spring surrounds an upstanding flange 63 of the cage which centers the spring. The interior of the cage 60 is of sufficient height to permit a small vertical movement of the valve member 58. When liquid is flowing upward in the intake tube 56 into the barrel 50, the valve member 58 rises into engagement with a plurality of stops 64 spaced to provide passage means accommodating the upward flow.

The barrel 50 and its associated structure thus far described may be considered as comprising one of the pump elements of the invention, removably connected to the container 12 by the cap 48. The other pump element is movable relative thereto along the axis B—B and includes, in general, a hollow plunger 65 comprising a piston portion 66, a tapered portion 67, and a liquid-conducting, pump-actuating member 68 there being an annular shoulder 69 at the junction of the tapered portion 67 and the actuating member 68. The piston portion 66 provides a shouldered recess receiving the upper end of the spring 62, whereby this spring not only holds the cage 60 in position but also resiliently urges the hollow plunger 65 upwardly. The piston portion 66 is only slightly smaller than the interior of the barrel 50 to minimize leakage of pumped liquid therebetween. In normal use, this leakage is very small but, if present, is returned to the liquid in the container 12 through a slot 70 formed longitudinally in the upper end of the barrel 50 and traversing the flange 51. This slot also maintains the pressure on the upper portion of the piston portion 66 equal to the pressure on the

liquid in the container 12 and produces other desirable results, such as set forth in the aforesaid patents.

The actuating member 68 provides a cylindrical exterior surface 71 and a liquid-conducting passage 72, both coaxial with the axis B—B. The pump-actuating member 68 is movable relative to the container along this axis and, during such movement, is additionally guided by a retaining member 75 which, in the present invention, serves several purposes. This retaining member 75 provides a skirt 76 telescoping within and suitably adhered to an upstanding collar 77 of the flange 51. This collar 77 has an external diameter slightly smaller than the internal diameter of the flange 52 of the cap 48 and serves to journal the cap and to centralize the barrel 50 with respect to this cap. The retaining member 75 also has a depending flange 78 which closely surrounds and slidably journals the exterior surface 71 of the pump-actuating member 68. This depending flange serves several functions. In the first place, it serves as a wiper for the exterior surface 71 as the actuating member 68 moves upward. In the second place, it surrounds this exterior surface sufficiently closely to provide a relatively good sealing action preventing a gravity flow of liquid from the container 12, even though the device is upturned or if the axis B—B is horizontal. In this connection, it should be understood that auxiliary sealing means can be provided at this point, if desired, but this is usually not necessary and, if used, should still, during operation of the device, permit passage of a small amount of air necessary to compensate for liquid displaced from the container 12. In the embodiment shown, such displacement air enters the container through the junction of the depending flange 78 and the pump-actuating member 68 during relative movement therebetween but without permitting substantial or objectionable leakage of liquid. In the third place, the lower end of this depending flange serves as a stop engaged by the annular shoulder 69 to limit the extended position of the hollow plunger 65 under the action of the spring 62.

In addition, the retaining member 75 provides an outwardly-extending flange 79 serving a dual purpose. Thus, this flange 79 is of a diameter slightly larger than the internal diameter of the flange 52 of the cap 48 so as to prevent detachment of the cap 48 from association with the pump elements when the entire pumping structure is removed from the container 12. Also, in accordance with the present invention, this flange 79 forms a support for a tubular, closed-ended and preferably domed cover 80 (see Figs. 5 and 7), preferably having a cylindrical side wall of such internal diameter as to be slid over the flange 79 and to be held in place by friction against accidental removal. The cover 80 protects the head 11 from contamination or accidental movement when the invention is carried in the pocket or handbag. In the preferred construction, the lower portion of the cylindrical side wall provides at least three minute inwardly-extending projections 80a which engage the flange 79, leaving narrow intervening annular spaces 80b permitting passage of air to equalize the pressures inside the cover 80 and surrounding the container 12 but of such narrow dimension as to prevent passage of the liquid except under pressure. Thus, any accidental leakage between the retaining member 75 and the pump-actuating member 68 is retained in the cover 80.

If desired, a small cushion member 81 of sponge rubber or other soft material may be adhered in the upper interior of the domed cover 80 to engage the head 11 in orifice-sealing relationship. This member 81 may adsorb or take up medicament from the orifice which it seals or it may be otherwise wetted with the medicament from time to time. In either event it not only prevents any drying of the medicament in the orifice but also sterilizes the surface of the head 11 which it engages if the medicament has an antiseptic action.

The head 11 forms an important part of the present invention and is constructed as best shown in Figs. 5, 6, and 7. In general, it provides a body, externally contoured as later described, and having a central opening 82 within which the upper end of the pump-actuating member 68 is suitably adhered. Extending across the upper end of the opening 82 is an end wall 83 formed integrally with the remainder of the head 11 and providing a discharge orifice 85 axially aligned with the axis B—B. The function of the pump 13 is to deliver to the inner or entrance end of this discharge orifice 85 a pressured stream of the medicament or other liquid which is to be jetted from the device. The function of the orifice 85 is to form this liquid into a needle-like stream 14. In practice, the orifice 85 can be shaped to produce the particular stream desired. The preferred orifice for the invention, when used as a nasal medicator or for other purposes, is a minute cylindrical-walled orifice having a diameter between about .008" and .012", preferably .010", this diameter determining the diameter of the needle-like stream 14 immediately upon expulsion. In the preferred practice, the axial length of the orifice 85 is at least twice the diameter and preferably from two to ten times this diameter, a very satisfactory length for a nasal medicator being about $\frac{1}{32}$", or slightly more. The orifice 85 is usually formed during the molding operation and its size is such that no medicament will flow gravitationally therethrough if the device is upturned.

In the preferred construction, a tubular element 86 is disposed in the central opening 82 between the end of the pump-actuating member 68 and the end wall 83, and serves numerous functions. The lower end of this tubular element 86 provides a passage 87 axially aligned with, and forming a continuation of, the liquid-conducting passage 72. Toward its upper end, this passage is constricted, as indicated at 88, and opens into a valve chamber 89 in which is disposed a valve element 90 adapted, when in its lower position, to engage in sealing relationship a conical valve seat 91 of the tubular element 86. The valve member 90 is shown as a small sphere, typically a small ball bearing sufficiently smaller in diameter than the valve chamber 89 to move freely therein, while permitting passage of the liquid in the zone between the valve member and the side wall of the chamber 89.

A small disc-like filter or strainer 93 is disposed in the extreme upper end of the central opening 82 just below, and preferably extending across the entrance portion of, the orifice 85. This strainer is preferably formed of metal screen, usually stainless steel screen of about 100 mesh, and has an outer diameter substantially corresponding to the diameter of the central opening 82. The upper end of the tubular element 86 bears annularly against the lower portion of this screen and aids in retaining it in place.

Such a screen-type filter serves many desirable functions in the device. In the first place, it strains the liquid discharging through the small orifice 85 and prevents clogging thereof by any particles which might have accidentally entered the liquid medicament. In the second place, it serves as a stop for the upward movement of the valve member 90. This value member engages the lower portion of the screen in a zone beneath the orifice 85 and such engagement tends to clean the screen in the central area which feeds the orifice. In the third place, the screen is of such small mesh that it remains wetted with the liquid medicament, thus tending to prevent any leakage of air into the device through the orifice and thus aiding the upper valve structure in preventing any loss of prime of the pump. When the cover 80 is in place, the cushion member 81 aids further in this connection.

The length of the tubular element 86 preferably determines the maximum stroke and, thus, the maximum discharge per stroke which, preferably, is less than the total dosage of medicament desired so that a predetermined number of actuations, usually three, is required to expel the prescribed dosage, thus preventing a part of the dosage from running from the nose, as might be the case if discharged in a single actuation. In this connection, the maximum inward movement of the pump-actuating member 68 and its attached piston portion 66 is preferably determined by engagement between a lower lip 94 of the head 11 and the upper surface of the retaining member 75. In assembling the device, the position of this lip 94 with respect to the pump-actuating member 68 is determined by the length of the tubular element 86. Shortening of this tubular element will produce a shorter stroke, with correspondingly decreased dosage, while lengthening of the tubular element will increase the stroke, with correspondingly increased dosage. In this way, selection of a tubular element 86 of appropriate length predetermines the maximum dosage of the device per stroke or actuation.

The external contour of the head 11 contributes importantly to various usages of the invention. The self-directional character of the invention, when used for nasal medication and its effectiveness for this purpose, is substantially aided by an appropriate design of the applicator end of the head 11. Preferably, the upper or applicator end of this head provides a rounded nostril-engageable surface 95 of a size to engage the nostril or the anterior naris. This shape of the surface 95 can be made to serve two desirable functions. In the first place, it insures substantial centering of the stream 14 with respect to the nostril. In the second place, it can deform the nostril into substantially circular contour and engage same in substantially air-sealing relationship to prevent any substantial ingress or egress of air during the medicating operation. This is desirable as preventing drafts or currents of air which might quickly displace the mist-like spray from its desired environment, either by drawing it into the throat or expelling it through the nostril.

At the base of the surface 95 is a rounded ledge 96 serving to prevent too deep a penetration of the head 11 into the nasal passage by engagement with the anterior naris or nostril.

The head 11 also provides finger-engageable means for actuation of the pump when the container is held in the hand and the head 11 is engaged by one or more fingers of this hand. Pref-

erably, the head provides finger-engageable means adapted to be engaged by two adjacent fingers or by the end of the thumb. The preferred construction provides finger-engageable depression means on opposite sides of the head to receive facing surfaces of two adjacent fingers of a hand while the container 12 is held exclusively by this hand. At the same time, it is desirable that the device should not require orientation about the axis B—B preparatory to being placed in operative position in the hand. For this purpose and other reasons, the preferred finger-engageable depression means comprises a shallow circular depression 98 extending completely around the head 11, preferably at a position between the rounded ledge 96 and the lower lip 94. The utility and advantages of such a finger-engageable depression 98 will be more fully apparent from the subsequent description of the mode of use of the invention.

Preferably, all of the elements of the device are made of a material non-reactive to the liquid medicament to be jetted, thus preventing any contamination thereof, either in the container 12 or during passage through the pump elements. In practice, we find it desirable to make as many of the elements as possible of thermoplastic or thermosetting resins. The head 11 and all of the elements of the pump 13, with the exception of the spring 62 and in some instances the valve element 90, can best be made of a polyvinyl chloride-polyvinyl acetate copolymer, e. g., a material known as Vinylite. Such a material is excellently suited to the apparatus and has long-wearing characteristics. The container 12 is preferably made of molded polystyrene and the domed cover 80 can desirably be molded methyl methacrylate, e. g., a material known as Plexiglas or Lucite, thus minimizing breakage during rough handling or upon droppage of the device.

In assembling the elements of the device, the pump elements are preferably first associated. The assembly can be accomplished, for example, in the following manner, it being clear that the words "adhered," "adhering," etc., have reference to any pressing, cementing, or other structurally-unifying operation tending to affix the parts in relatively permanent relationship. The valve member 58 and the cage 60 are dropped into the barrel, with the spring 62 in place, and the hollow plunger is lowered to compress the spring. The cap 48 is then positioned around the collar 77 and the retaining member 75 is then adhered within this collar. Preparatory to attaching the head 11, the strainer 93 is disposed in the central opening 82 and the tubular element 86 is then forced into this opening 82 with the valve element 90 in position. The upper end of this tubular element 86 preferably makes a press fit with the opening 82 and its lower end is somewhat relieved to provide for the reception of a suitable substance facilitating the adhering. The head 11 is then adhered to the upper end of the pump-actuating member 68. The washer 53 is then slipped around the barrel 50 and the intake tube 56 is then adhered to the barrel 50.

The container 12 is then filled to any desired level with the medicament, and the previously associated elements are then attached to the container in the relationship shown in Fig. 6 by tightening the cap 48. The head 11 is then moved toward the container 12 one or two times until the pump 13 is primed and the internal passages are completely filled with the medicament to and including the valve chamber 89, and

preferably the orifice 85. The device is now ready for metered discharge of the medicament.

In using the device for nasal medication, the preferred orientation, aiding substantially in the self-directional character of the invention, is suggested in Fig. 3, showing operation by a right-handed person. Here, the index finger and the second finger of the right hand are pressed into the circular depression 98, the thumb engaging the bottom wall 46. The fingers engaging the depression 98 are then moved toward the thumb. This moves the head 11 toward the container 12, the reaction force being taken by the thumb. This is done after the surface 95 has been engaged with the nostril so that the head 11 extends a short distance into the nasal passage. This method of holding the jetting device of the invention, combined with the engagement between the head 11 and the nostril, insures delivery of the stream 14 to impinge on the upper internal surfaces of the nose. During such actuation of the device, a patient will automatically orient the axis B—B in the desired direction, any attempt to substantially displace this axis from its desired relationship with the nose representing an unnatural or uncomfortable method of actuating the device. When the device is oriented in the hand as suggested in Fig. 3, it is almost automatically "aimed" properly by the motions necessary to the actuation.

So, also, when the device is used for purposes other than nasal medication, its relationship with the human hand, suggested in Fig. 3, represents an accurate "aiming" as the thumb is aligned with the axis B—B and the first and second fingers are on opposite sides thereof—a natural "aiming" position. When the device is used in this manner for eye or throat irrigation, it is remarkably directive, even in hands unaccustomed to the device, in the sense that the device can be accurately "aimed" so that the direction of the stream 14 is predetermined.

Another method of holding the device, which is almost equally satisfactory and which is preferred particularly if the device is to be used for inconspicuous nasal medication in public places, is suggested in Fig. 4. Here, the device is held in the palm of the hand, with the container partially encircled by the second, third, and fourth fingers. The thumb and index finger press into opposite sides of the circular depression 98. Here again, when the device is brought into contact with the nostril, the axis B—B will naturally be disposed to direct the stream 14 to the desired surfaces of the nasal cavity. To expel the liquid, the thumb and first finger are moved toward the palm of the hand, the reaction force in this instance being taken either by the encircling fingers or by the bottom of the container, which rests in the palm of the hand. When used in the position shown in Fig. 4, the device can also be "aimed" with very substantial accuracy, thus facilitating employment of the device for purposes other than nasal medication.

Another similar method of using the device is to place only the end of the thumb in the circular depression 98 while the remaining fingers encircle the container. The thumb is moved toward the container to advance the head and actuate the pump.

The device can also be employed for nasal medication merely by grasping the container and forcing the container toward the head 11 while the surface 95 of this head is in contact with the

nostril. The rounded ledge 86 serves as a stop for preventing undue penetration of the head into the nasal cavity. In this instance, the reaction force is taken by the nose itself and, again, the device will automatically be used in such way as to jet the stream 14 in the correct and most advantageous direction.

It is sometimes desirable to use a spring-loaded valve member in the head 11. This can be accomplished by interposing a light compression spring between the valve member 90 and the strainer 93, or the alternative valve member shown in Fig. 10 can be used. As shown in Fig. 10, the conical valve seat 91 is engaged by a conical portion 100 of a valve member 101 molded of suitable plastic material and being hollow to lessen its weight. This valve member 101 provides a tongue 102 of smaller diameter than the constricted passage 88 and preferably tapered, as shown, to guide the to and fro movement of the valve member and retain its orientation relative to the seat 91. The upper end of the valve member provides an annular recess which receives and centers the lower end of a spring 105 compressed between the valve member 101 and the strainer 93. The spring tension should be just sufficient to hold the valve member against the seat 91 when the device is inverted, thus preventing any air flow into the pump when the device is operated in any position where gravity tends to unseat the valve, e. g., when the jet is angled downwardly from the horizontal. The requisite spring tension is very small and does not interfere with a lifting of the valve member by the liquid during actuation of the device.

The device herein described in detail, provided with an orifice of 0.01" in diameter, develops sufficient pressure to jet a stream which holds together for at least a foot or more and which then breaks up into small droplets which will carry to a surface six or eight feet away and impinge in a circular area having a diameter of only a few inches.

One feature of the device is that it may be carried without danger of leakage even when subjected to change in atmospheric pressure. With the construction hereinbefore described, a change in atmospheric pressure is transmitted to the interior of the cover 80 through the spaces 80b and to the interior of the container 12 through the minute passages between the washer 53 and the depressions of the upper annular edge 47a. Thus, if the structure is upright or in any position in which the liquid does not submerge the entrance portions of all of the aforesaid minute passages, e. g., if it is not in an upturned position, such breathing of air into and from the cover 80 and into and from the container 12 will prevent pressure differentials which might expel liquid through the pump. In the absence of such features, a reduction in atmospheric pressure, as by carrying the device to a higher altitude, may cause a column of liquid to rise in the pump and discharge from the orifice 85. Even then, however, such discharge is retained in the cover 80 and does not leak therefrom unless all of the spaces 80b are closed by the liquid and sufficient pressure differentials are developed to force the liquid therethrough. Even if the device is upturned so that the entrance portions of all of the minute passages hereinbefore mentioned are submerged, any

such reduction in atmospheric pressure will cause discharge into the cover 80 of only that small amount of liquid in the pump. In such upturned position, the open end of the intake tube 56 communicates with the air in the container 12 and the pressure differential is relieved through the passages of the pump, the valve members 58 and 90 being then gravitationally displaced from their respective seats and the strainer 93 preventing the valve member 90 from closing the orifice 85.

Various changes and modifications can be made without departing from the spirit of the invention as defined in the appended claims.

We claim as our invention:

1. In a device for injecting a jet of liquid medicament into the nasal cavity, the combination of, an applicator head having a rounded end fitting the entrance to the nostril, said head also having an axially directed orifice centrally disposed in said end for directing a thin stream of said liquid medicament through said nostril into contact with the upper sinus areas, and a liquid measuring pump between a source of liquid medicament and said head for withdrawing liquid medicament from said source and forcing a measured volume thereof under pressure through said orifice.

2. In a device for injecting a jet of liquid medicament into the nasal cavity, the combination of, an applicator head having a rounded end fitting the entrance to the nostril, said head also having an axially directed orifice centrally disposed in said end for directing a thin stream of said liquid medicament through said nostril into contact with the upper sinus areas, a container for holding a body of said liquid medicament and having a longitudinal axis in substantial alignment with the axis of said head and orifice, a liquid supply tube in said container and a liquid measuring pump for withdrawing liquid medicament from said body through said supply tube and forcing a measured volume of said liquid medicament under pressure through said orifice.

3. In a device for injecting a jet of liquid medicament into the nasal cavity, the combination of, an elongated applicator head having a rounded end fitting the entrance to the nostril and having a peripheral groove spaced axially from said end and constituting finger engaging means, said head also having an axially directed orifice centrally disposed in said end for directing a thin stream of liquid medicament through said nostril into contact with the upper sinus areas, a supply tube for said liquid medicament, and a liquid measuring pump between said supply tube and said orifice for forcing a measured volume of said liquid medicament through said orifice upon relative movement of said head and supply tube toward each other.

FREDERICK M. TURNBULL.
WILLIAM F. HAMILTON.

REFERENCES CITED

The following references are of record in the file of this patent:

UNITED STATES PATENTS

Number	Name	Date
780,077	Van Ness	Jan. 17, 1905
2,064,314	Morin	Dec. 15, 1936
2,362,081	Martin	Nov. 7, 1944

Certificate of Correction

Patent No. 2,434,875. January 20, 1948.

FREDERICK M. TURNBULL ET AL.

It is hereby certified that error appears in the printed specification of the above numbered patent requiring correction as follows: Column 10, line 8, for "value" read *valve*; and that the said Letters Patent should be read with this correction therein that the same may conform to the record of the case in the Patent Office.

Signed and sealed this 20th day of April, A. D. 1948.

[SEAL]

THOMAS F. MURPHY,
Assistant Commissioner of Patents.