May 6, 1947. W. H. HUNTER 2,420,137

INFLATION APPARATUS FOR ELIMINATING ICE FROM AIRFOILS

Filed Dec. 4, 1943 2 Sheets-Sheet 1

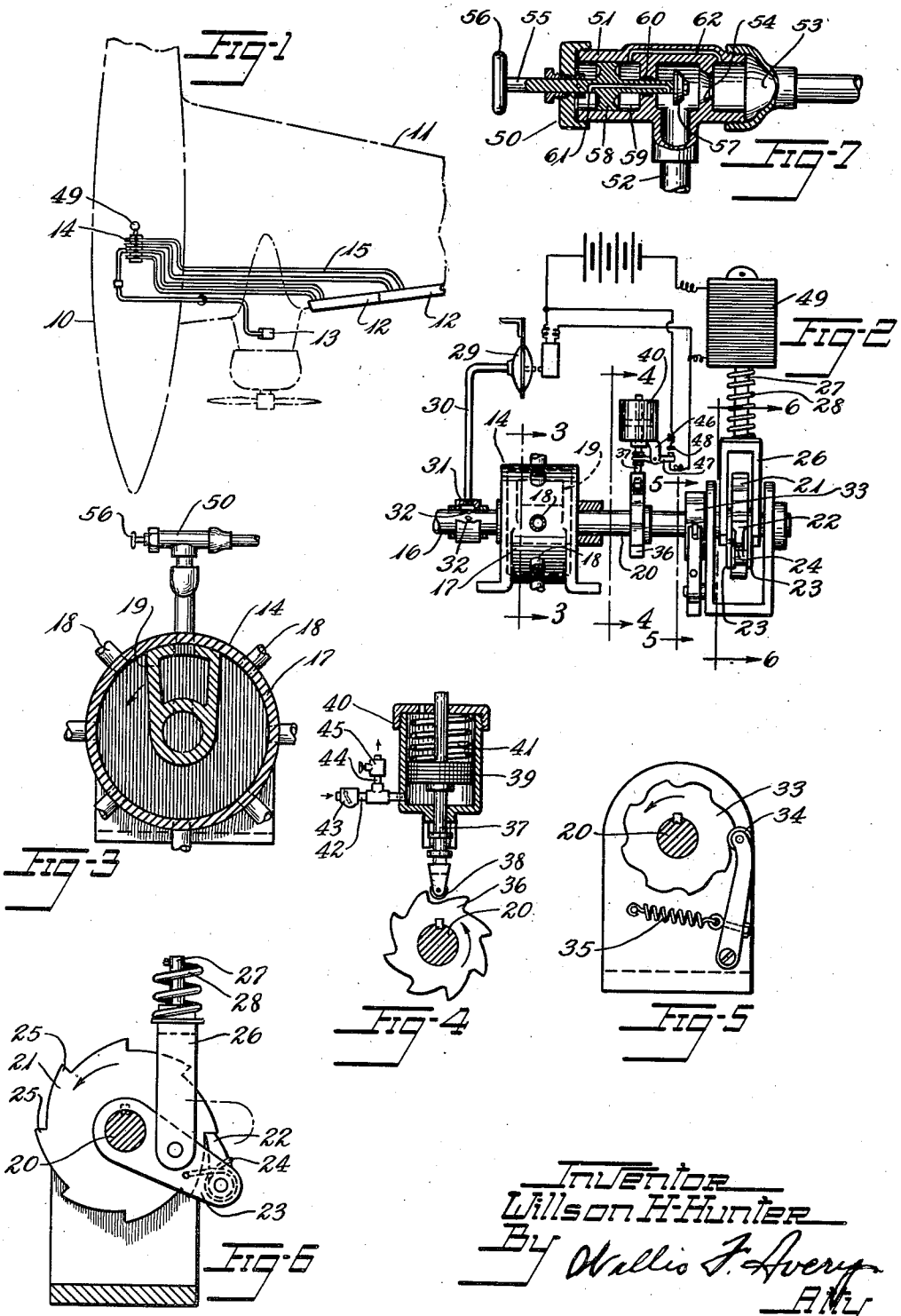

Inventor
Willson H. Hunter
By Wallis J. Avery
Atty

May 6, 1947. W. H. HUNTER 2,420,137

INFLATION APPARATUS FOR ELIMINATING ICE FROM AIRFOILS

Filed Dec. 4, 1943 2 Sheets-Sheet 2

Fig-8

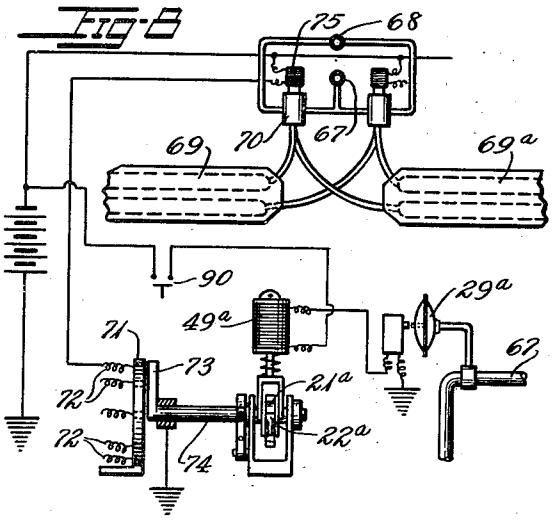

Fig-9

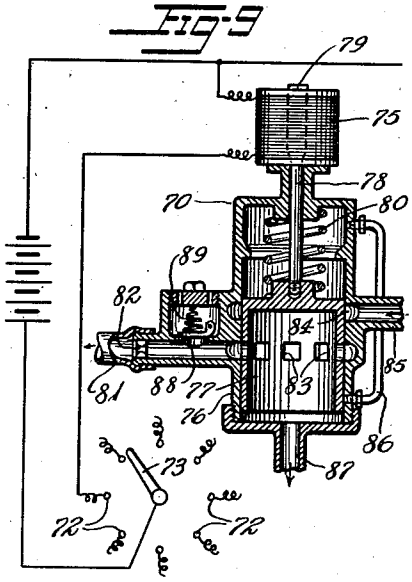

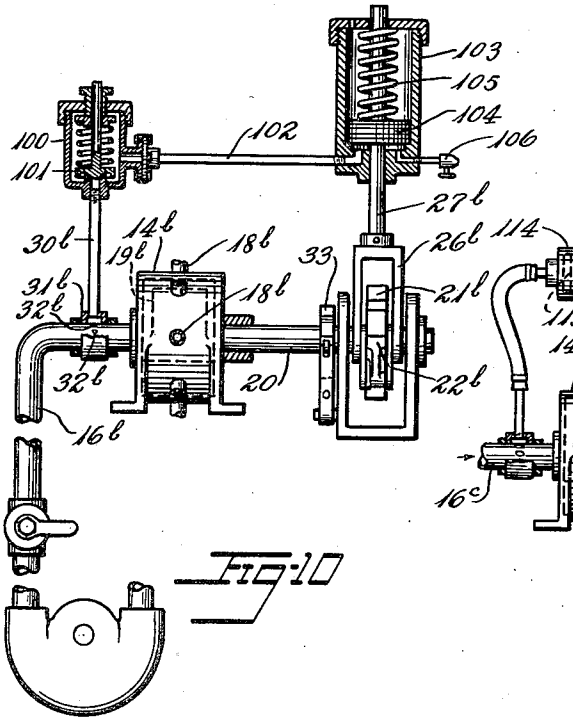

Fig-10

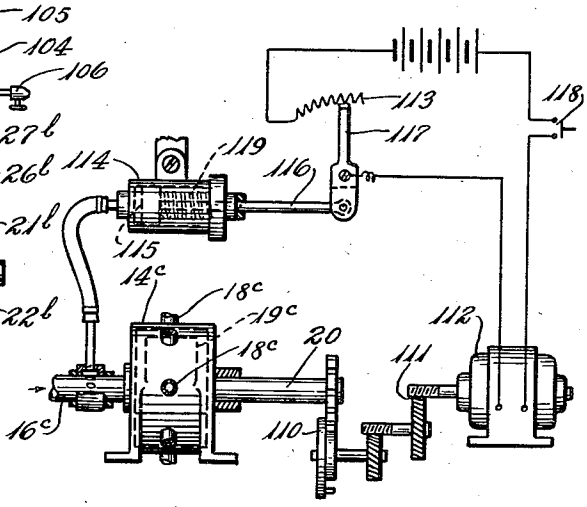

Fig-11

Inventor
Willson H. Hunter
By Willis F. Avery
Atty.

Patented May 6, 1947

2,420,137

UNITED STATES PATENT OFFICE

2,420,137

INFLATION APPARATUS FOR ELIMINATING ICE FROM AIRFOILS

Willson H. Hunter, Lakewood, Ohio, assignor to The B. F. Goodrich Company, New York, N. Y., a corporation of New York

Application December 4, 1943, Serial No. 512,866

12 Claims. (Cl. 244—134)

1

This invention relates to inflation apparatus, suitable, for example, for the elimination of ice on wings, airfoils, and other surfaces of aircraft, and the invention pertains especially to mechanisms for distributing the inflation medium to the inflation units and for controlling the inflation and deflation in cyclic operation.

As practiced heretofore, the alternate inflation and deflation of inflatable units for this purpose have been controlled by a distributor system operated by a motor driven timing device. The timing device has operated to inflat each unit over a given time interval before the timing device has shifted to inflate a second unit and deflate the first one. The fixed time interval has not always coincided with the optimum time interval for most effective ice removal, and the fixed interval of the prior system has been subject to the objection that icing conditions vary as to types of ice and severity and require varying time intervals of the inflation for best operation.

An object of the invention is to provide for automatic control of the time interval of inflation in accordance with the need at the time of the operation.

Another object is to provide control apparatus whereby the inflation period is controlled by the pressure of the inflation medium in the unit under inflation. Another object is to provide apparatus including distributor means for supplying air under pressure to a plurality of inflatable units whereby operation of the distributor means is controlled successively by pressure of air in the particular units under inflation. Still another object is to provide an automatically operating mechanism for closing off the air supply line to any inflatable unit whenever such unit becomes broken or ruptured. Other objects will become apparent in the detailed description of the invention given hereinafter.

Of the drawings:

Fig. 1 is a diagrammatic plan view of a section of an airplane fuselage and one wing showing a system of inflatable units constructed in accordance with and embodying the invention.

Fig. 2 is an elevation and diagrammatic view of one embodiment of the invention showing the distributor mechanism.

Fig. 3 is a section taken along line 3—3 of Fig. 2.

Fig. 4 is a section taken along line 4—4 of Fig. 2, parts being sectioned.

Fig. 5 is a section taken along line 5—5 of Fig. 2.

2

Fig. 6 is a section taken along line 6—6 of Fig. 2.

Fig. 7 is a vertical section of an automatic closure valve, one of which is placed in the air line to each inflatable unit.

Fig. 8 is a diagrammatic plan view of another embodiment of the invention.

Fig. 9 is a vertical section of the valve of Fig. 8 and attached electrical circuit.

Fig. 10 is a diagrammatic plan view of a further embodiment of the invention.

Fig. 11 is a diagrammatic plan view of a still further embodiment of this invention.

In Fig. 1 there is shown, diagrammatically, a section of an airplane fuselage 10 and a section of one wing 11 with inflation apparatus within the airplane and inflatable shoes 12, 12 on the leading edge of the wing. The apparatus shown comprises an air-pump 13 which may be driven by the airplane motor, a distributor mechanism 14, and a piping system 15 leading from the pump 13 to the distributor 14 and from the distributor to the inflatable shoes 12. Each shoe 12 may comprise two sets of inflatable units, hence two pipes to each shoe are required. Other elements of the inflation apparatus of this invention are illustrated in more detail in the other figures of the drawings.

One embodiment of the distributor control apparatus is shown in Figs. 1 to 7 inclusive, of the drawings. The apparatus comprises an air supply line 16 leading to a distributor 14 comprising a housing 17 containing peripherally spaced-apart ports 18, 18 each communicating with an inflatable unit by means of piping as shown in Fig. 1. The distributor also comprises a rotor 19 attached to a shaft 20 for turning from one port to another. The rotor 19 is connected to the air supply line 16 and is so constructed that air flows through the rotor and out a port to an inflatable unit. Air flow can be then directed to any inflatable unit by merely turning the rotor to the corresponding port.

A side of the distributor housing 17 is open to the atmosphere so that when one unit is inflated, and the rotor 19 is turned to the next port 18, air from the inflated unit can exhaust back through its port to the atmosphere. Thus here each port and its connecting piping to a unit serves alternately as inlet means and outlet means. The distributor may include also suction means for maintaining the inflatable units on suction in the intervals between inflations, for example, as is disclosed in my Patent No. 2,327,046.

In order to turn the rotor of the distributor there is provided an assembly mounted on the rotor shaft including a ratchet 21 and pawl 22. The pawl 22 is pivoted on a pair of arms 23, 23 rotatably mounted on the shaft 20 and is held against the ratchet by means of a spring 24. The teeth 25, 25 of the ratchet are spaced-apart such a distance and the arrangement is such that each movement of the ratchet 21 by the pawl 22 brings the distributor rotor 19 under a valve port 18. To operate the pawl 22 it is mounted between the arms of a yoke 26 which is attached to the armature of a solenoid 49 by means of a rod 27. A coil spring 28 arranged around the rod 27 keeps the pawl structure in normally extended position, as shown.

For the purpose of supplying electric current to the solenoid there is arranged an electrical circuit including a battery and a diaphragm switch 29. The switch is connected to the air supply line 16 by means of a pipe 30 extending from the diaphragm switch 29 to a manifold connection 31 on the air supply line which comprises a cylindrical channelled member arranged around the supply line and covering a series of apertures 32, 32 in the pipe 16.

As can be seen from the foregoing description, each time the distributor rotor 19 is turned by the ratchet 21 and pawl 22 the opening in the rotor should be directly under a distributor port. In order to provide for this there is arranged on the rotor shaft a detent comprising a notched wheel 33 and a roller 34 held against the wheel by means of a spring 35. These notches are positioned on the wheel 33 in the same ratio that the distributor ports 18, 18 are positioned in the distributor 14 and in the same ratio as the teeth 25, 25 of the ratchet 21. Therefore when the ratchet and pawl turns the rotor to a new port the roller is forced into a notch on the detent and aligns the rotor 19 squarely with the port.

There is provided an auxiliary timing device designed to operate after a determinate interval of time so that if for some reason the diaphragm switch 29 does not operate within such interval, the inflation of the next unit in sequence will not be unduly delayed. This timer comprises a toothed wheel 36 fixed to the rotor shaft 20 and a vertical rod 37 with a roller 38 riding on the periphery of the wheel. Near the top of the bar is affixed a piston 39 slidable in a cylinder 40. On top of the piston 39 is a spring 41 normally forcing the piston down. The cylinder 40 communicates at the bottom to the atmosphere through a short forked pipe. One fork 42 contains a check valve 43 so that air can be drawn in but cannot escape back through the valve. The outer fork 44 contains a needle valve 45 or the like having a restricted opening. On the bottom of the cylinder 40 is fastened a bracket 46 pivotally supporting a short rocker arm 47, one end of which is loosely attached to the piston rod 37 and the other end of which contains a make and break electrical contact 48. This contact is part of an electrical circuit to the solenoid 49, arranged to shunt the diaphragm switch 29.

When the rotor 19 is turned to a new port 18 the toothed wheel 36 turns with the shaft forcing the piston 39 to the emergency timer up, compressing the spring 41, and drawing air through the check valve 43 into the space beneath the piston 39. The electrical contact is then broken. The spring 41 on the top of the piston 39 forces it down slowly as the entrapped air is forced out the restricted opening of the needle valve 45. If the diaphragm switch 29 is operating normally the piston 39 does not reach the bottom before it is again forced up by the distributor rotor 19 being turned to a new port. However, if the diaphragm switch 29 is delayed for some reason, the piston 39 reaches a point where the electrical contact 48 is closed and the solenoid 49 is energized independently of the diaphragm switch 29.

As the timing of this invention depends upon the air pressure of the particular unit under inflation provision is made for maintaining operation despite rupture of a unit as from shell fire in combat. When the distributor rotor 19 is turned to the port supplying a unit which has been ruptured, the flow is automatically cut off by an automatic closure device 50. Such an automatic device is shown in Fig. 3 affixed to one of the distributor ports, and in detail in Fig. 7.

The automatic closure device 50 comprises a housing 51 containing an air inlet passage 52, an air outlet passage 53 substantially at right angles thereto, a valve seat 54 in the air outlet passage, and a closure means extending into the housing comprising a stem 55 with a handle 56 on the outside end and a valve 57 on the inner end interacting with the valve seat 54. The stem 55 has mounted thereon a piston 58 slidable in a piston chamber 59 that is built into the housing. The inner end of the piston chamber, has a loose packing 60 around the stem 55 so that air can seep through. The stem contains an air bleeder line 61 which communicates from the air passage in the device, immediately behind the valve 57, to the piston chamber 59 on the far side of the piston 58. There is another bleeder line 62 that is located in the housing 51 and communicates from the air outlet passage 53 to the piston chamber 59 on the near side of the piston 58. In normal operation with an inflatable unit air seeps through the packing 60 around the stem 55 and through the bleeder lines to equalize pressure on both sides of the piston so that the valve remains in open position. Then when the inflatable unit is ruptured the valve in the device automatically closes in the following manner: The air going into the unit sweeps through the device very fast as it is unhindered by the normal resistance of the unruptured unit. Under these conditions greater pressure is built up on the far side of the piston 58 than on the near side and it moves to the right (Fig. 7), thereby closing the valve 57 to shut off the air supply to the ruptured unit. When the unit is repaired the automatic closure device may be opened by hand by merely pulling it open by means of the stem handle 56.

In the operation of the inflation apparatus shown in Fig. 2, air pressure from the air pump flows through the air supply line 16 into the distributor 14 and out the port to the unit. As soon as the inflatable unit is fully expanded and air pressure has reached a pre-determined value the static pressure in the air supply line 16 rises sharply. This static pressure operates through the manifold connection 31 on the air supply line and through the connecting pipe 30 to the diaphragm switch 29 to close its contact. The solenoid 49 is then energized and raises the solenoid armature against the resistance of the armature spring 28, thereby causing the pawl 22 to turn the ratchet 21. As the ratchet 21 is fastened to the rotor shaft 20 the rotor 19 of the distributor is turned to the next port and inflation of its connecting inflatable unit is begun while air in the inflated unit flows back through its port and

into the atmosphere. Thus each inflatable unit is inflated in sequence.

Another embodiment of the invention is shown in Figs. 8 and 9. Here each inflatable unit 69 or pair of units 69, 69a has its own distributor such as the distributor valve 70 shown in detail in Fig. 9 for controlling flow from a pressure line 67 and to a suction line 68. The inflation apparatus comprises a diaphragm switch 29a as well as a ratchet 21a and pawl 22a operated by a solenoid 49a. Operation of each inflatable unit in sequence is maintained by means of a timer mechanism 71 comprising an electrical contact tap 72, 72 to each distributor and a contact arm 73 arranged for movement from one contact tap to another. This contact arm 73 is turned from one electrical contact tap to the next by means of the ratchet 21a which is mounted on a shaft 74, the other end of which holds the contact arm 73.

The individual distributors are each operated by its own solenoid 75. Each distributor comprises a cylindrical casing 76 in which is mounted a valve 77 that is reciprocated in the vertical direction (Fig. 9) by means of a rod 78 consisting of an extension of the solenoid armature 79. A compression spring 80 urges the valve 77 down. At its lower end the casing 76 has a connection 87 to the inflatable unit. On the left side of the casing is a port 81 communicating with a suction line through a restricted orifice 82. This suction port 81 may comprise a manifold passage about the casing, and in the position of the ports shown it is in communication with a circle of apertures 83, 83 in the valve so that suction is applied to the inflatable unit. At a position above the suction manifold port is a second manifold port 84 having a connection 85 to the air supply line. A by-pass line 86 permits venting of air from one side of the piston valve 77 to the other when it is moved.

In order to permit a major portion of the air from the inflatable unit to exhaust at atmosphere rather than into the suction line, the suction port 81 contains an exhaust valve 88 held closed by a light pressure spring 89. Because the port contains the restricted orifice 82 most of the air from the inflatable unit will exit through the exhaust valve into the atmosphere, leaving only the residue to be drawn out by suction.

Assuming now that the timer 71 has been put into operation by means of a control switch 90, there being a contact tap 72, 72 to each distributor solenoid in turn, the timer arm 73 makes contact over a tap and the distributor solenoid 75 is energized. The piston valve 77 is drawn up closing the inflatable unit to suction and opening it to the air supply line. As soon as the inflatable unit has been inflated to the desired pressure the diaphragm switch 29a closes, energizing the control solenoid 49a, and turns the contact arm 73 to the next tap. This de-energizes the distributor solenoid 75 on the inflated unit and energizes the next solenoid. The spring 80 on the de-energized solenoid pushes the valve 77 down connecting the inflated unit to the exhaust and suction line and deflating the inflated unit while the new unit is being inflated. Thus operation continues from one unit to the next in sequence, all timing being controlled by air pressure in the particular unit under inflation.

A third embodiment of the invention is shown in Fig. 10, in which there are no electrical connections but all inflation is under pneumatic control. This embodiment comprises the usual air

pump 13b and air supply line 16b, the distributor 14b, and the ratchet 21b and pawl 22b for turning the distributor rotor 19b from one port 18b to the next. The air supply line 16b contains the usual apertures 32b, 32b covered by a manifold connection 31b connected to an air pipe 30b. This pipe communicates with a relief valve 100 of the non-chattering type which is designed to open at a particular pressure and close after the pressure has dropped somewhat lower. This may be obtained by providing a valve with a piston 101 having a larger exposed area when open than it has when closed. The relief valve 100 is connected by means of a second air pipe 102 to the bottom of a cylinder 103 containing therein a slidable piston 104 normally held down by means of a spring 105. This cylinder also contains a needle valve 106 permitting slow exhaust of air to the atmosphere. The piston 104 is connected by means of a rod 27b and yoke 26b to the pawl 22b that turns the ratchet 21b.

When an inflatable unit is under inflation the relief valve 100, piston 104, and ratchet and pawl are in the position shown. As soon as the unit has been inflated to its desired pressure the static pressure in the air supply line 16b increases sharply and, operating through the first air pipe 30b, opens the relief valve 100 which remains open temporarily. This air pressure from the supply line 16b is then fed through the second air line 102 to the slidable piston 104, thereby raising it and operating the pawl 22b to turn the ratchet 21b and turning the distributor rotor 19b to the next port. The relief valve 100 then closes and air trapped beneath the piston 104 is exhausted out the needle valve 106 slowly lowering the piston 104 and the pawl 22b to their starting position. Thus operation is maintained in sequence from one distributor port to the next.

A fourth embodiment of the invention is shown in Fig. 11. Here there is the usual air supply line 16c and distributor 14c, but operation of the distributor is controlled by a Geneva-stop mechanism 110 operated, through a system of gears 111, by a motor 112 having a variable resistance 113 in the field circuit. The air supply line connection communicates to a housing 114 containing a piston 115 connected by a rod 116 to a lever contact arm 117 on the variable resistance 113. The apparatus is started and stopped by means of a switch 118 located in the motor's electrical circuit.

Before operation of the inflation apparatus shown in this embodiment the piston 115 is in the position shown, forced to the left by the piston spring 119. The full resistance is in the motor circuit so that the motor 112 will operate at its normal relatively slow speed. When the inflation has progressed to a stage where the pressure from the line 16c has risen so as to move the piston 115 to the right, the motor is speeded up by the reduction of the field resistance 113, and the shifting of the distributor rotor to the next port is accelerated in a manner responsive to the length of time taken to inflate the unit. The air pressure on the piston 115 is then lowered and its spring 119 pushes the piston 115 to the left. Thereupon the resistance 113 is cut into the motor's field again and the motor resumes its slower normal speed.

Variations may be made without departing from the scope of the invention as it is defined in the accompanying claims.

I claim:

1. Apparatus for supplying air under pressure

to a plurality of inflatable units, said apparatus comprising means for supplying air under pressure to the inflatable units, suction-producing outlet means and means responsive to the pressure of air in a unit under inflation for connecting said unit with said suction-producing outlet means and connecting the air-supplying means with another unit.

2. Apparatus for supplying air under pressure successively to a plurality of inflatable units, said apparatus comprising distributor means for supplying air under pressure in turn to the inflatable units, and electrically-operated means responsive to the pressure of air in units under inflation for operating the said distributor means.

3. Apparatus for supplying air under pressure successively to a plurality of inflatable units, said apparatus comprising distributor means for supplying air under pressure in turn to the inflatable units, said distributor means comprising a housing containing valve ports each connected to an inflatable unit and a rotor for directing air under pressure through each port in turn, and means responsive to the pressure of air in units under inflation for rotating said rotor.

4. Apparatus for supplying air under pressure successively to a plurality of inflatable units, said apparatus comprising an air supply line, a distributor means connected thereto comprising a housing containing ports each of which is connected to one or more of the inflatable units and a rotor for directing the air supply to each port in turn, electrically-operated rotating means for turning said rotor from one port to another, and switching means responsive to the pressure of air in units under inflation for operating the said rotating means.

5. Apparatus for supplying air under pressure successively to a plurality of inflatable units, said apparatus comprising an air supply line, a distributor means connected thereto comprising a housing containing ports each of which is connected to one or more of the inflatable units and a rotor for directing the air supply to each port in turn, electrically-operated rotating means for turning said rotor from one port to another, and switching means adjustable to close the electrical circuit to the rotating means in response to a determinate air pressure in a unit under inflation, said switching means comprising an air-operated diaphragm switch in communication with the air supply line.

6. Apparatus for supplying air under pressure to a plurality of inflatable units, said apparatus comprising an air supply line, a distributor means connected thereto comprising a housing containing ports each of which is connected to one or more of the inflatable units and a rotor for directing the air supply to each port in turn, electrically-operated rotating means for turning said rotor from one port to another, switching means adjustable to close the electrical circuit to the rotating means in response to a determinate air pressure in a unit under inflation, said switching means comprising an air-operated diaphragm switch in communication with the air supply line, means for stopping the rotating means at a port, and an auxiliary timing means for turning the rotating means after a determinate time interval.

7. Apparatus for supplying air under pressure successively to a plurality of inflatable units, said apparatus comprising a plurality of distributor mechanisms, an air supply line to said mechanisms, a timing means common to said mechanisms for operating said units in sequence, and

means responsive to static pressure of air in the air supply line for operating the said timing means.

8. Apparatus for supplying air under pressure successively to a plurality of inflatable units, said apparatus comprising a plurality of distributor mechanisms, an air supply line to said mechanisms, a timing means common to said mechanisms, and means responsive to static pressure of air in the air supply line for operating the said timing means, said distributor mechanisms each comprising a body having a transferring connection for an inflatable unit and inlet, exhaust, and suction connections, a valve between said transferring connections and, respectively, said inlet connection and said exhaust and suction connections, and means including a soleoid and electrical connections to said timing means for moving said valve to place said transferring connection alternately in communication with said inlet connection and with said exhaust and suction connections.

9. Apparatus for supplying air under pressure successively to a plurality of inflatable units, said apparatus comprising an air supply line, a distributor means connected thereto comprising a housing containing ports each of which is connected to one or more of the inflatable units and a rotor for directing the air supply to each port in turn, means including a ratchet and pawl for turning said rotor from one port to another, a piston structure connected to said pawl for operating the same, and means responsive to air pressure in a unit under inflation for conducting air under pressure to the piston structure to operate the rotor-turning means.

10. Apparatus for supplying air under pressure successively to a plurality of inflatable units, said apparatus comprising an air supply line, a distributor means connected thereto comprising a housing containing ports each of which is connected to one or more of the inflatable units and a rotor for directing the air supply to each port in turn, means for turning said rotor from one port to another, a piston means for operating the turning means, an air line from the supply line to the piston means, and, in said air line, a valve so constructed and arranged as to open at a predetermined pressure and close at a lower pressure.

11. Apparatus for supplying air under pressure successively to a plurality of inflatable units, said apparatus comprising an air supply line, a distributor means connected thereto comprising a housing containing ports each of which is connected to one or more of the inflatable units and a rotor for directing the air supply to each port in turn, a gear and motor assembly including a Geneva-stop mechanism for driving said distributor means, an electrical circuit connected to said motor including a switching means and a resistance in the field circuit, and means responsive to static pressure in the air supply line for operating the switching means.

12. Apparatus for supplying air under pressure successively to a plurality of inflatable units, said apparatus comprising an air supply line, a distributor means connected thereto comprising a housing containing ports each of which is connected to one or more of the inflatable units and a rotor for directing the air supply to each port in turn, a gear and motor assembly including a Geneva-stop mechanism for driving said distributor means, an electrical circuit connected to said motor including a switching controlled resistance

in the field circuit; a piston structure connected to said switch controlled resistance, and an air line from the high-pressure supply line to said piston structure for operating the same in response to pressure in said supply line.

WILLSON H. HUNTER.

REFERENCES CITED

The following references are of record in the file of this patent:

UNITED STATES PATENTS

Number	Name	Date
1,918,340	Knaak	Sept. 13, 1929
58,854	Lawther et al.	Oct. 16, 1866
2,313,515	Brown	Mar. 9, 1943
2,225,082	Orshansky et al.	Dec. 17, 1940
2,227,297	Coy	Dec. 31, 1940
2,337,426	Taylor et al.	Dec. 21, 1943
2,217,299	Taylor	Oct. 8, 1940