Aug. 6, 1946. H. B. WERNER ET AL 2,405,537

PUNCH PRESS

Filed March 19, 1943 5 Sheets-Sheet 1

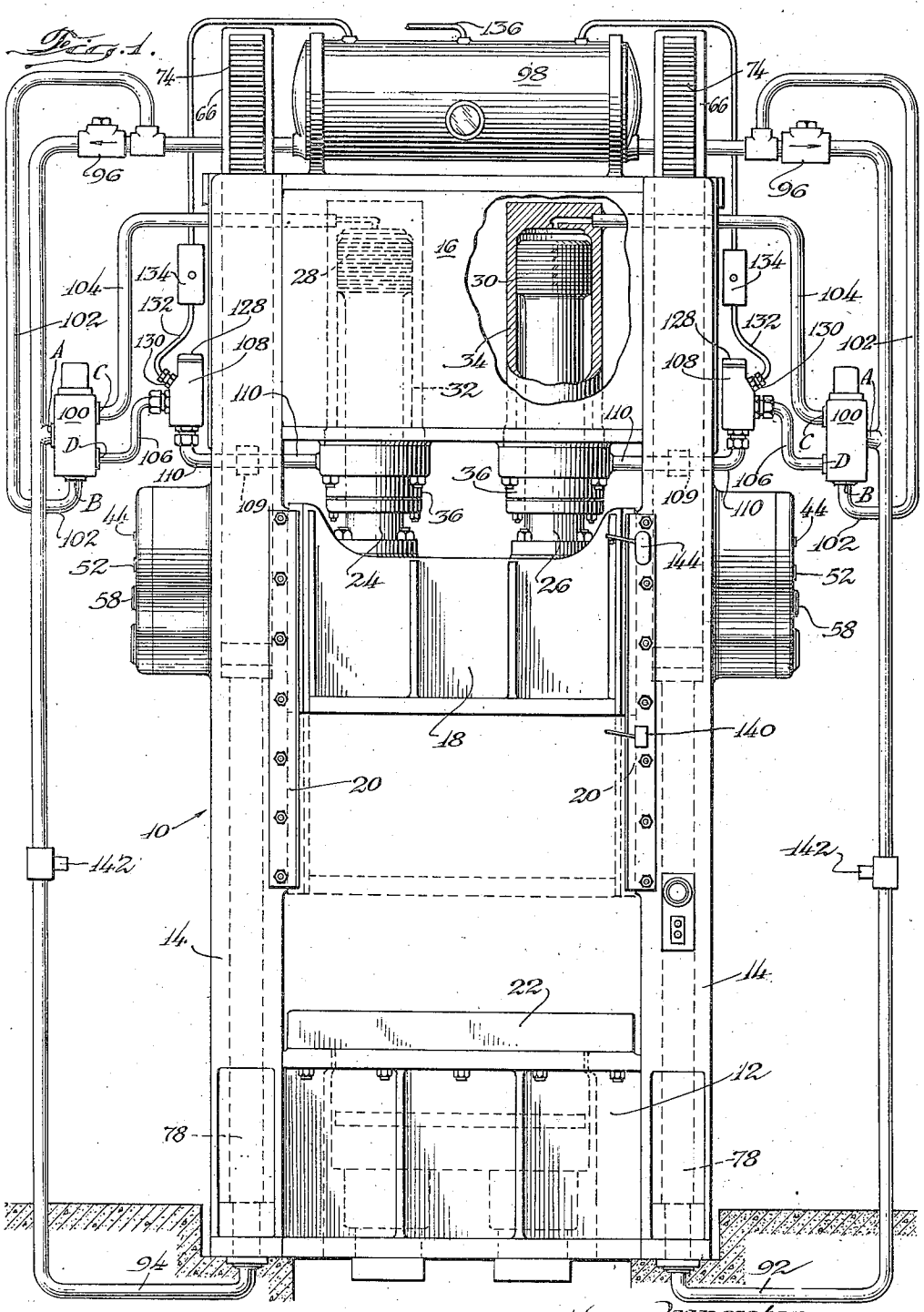


Inventors:
Herbert B. Werner
John Verson
By Williams, Bradbury & Hinkle
Attorneys.

Aug. 6, 1946. H. B. WERNER ET AL 2,405,537

PUNCH PRESS

Filed March 19, 1943 5 Sheets-Sheet 2

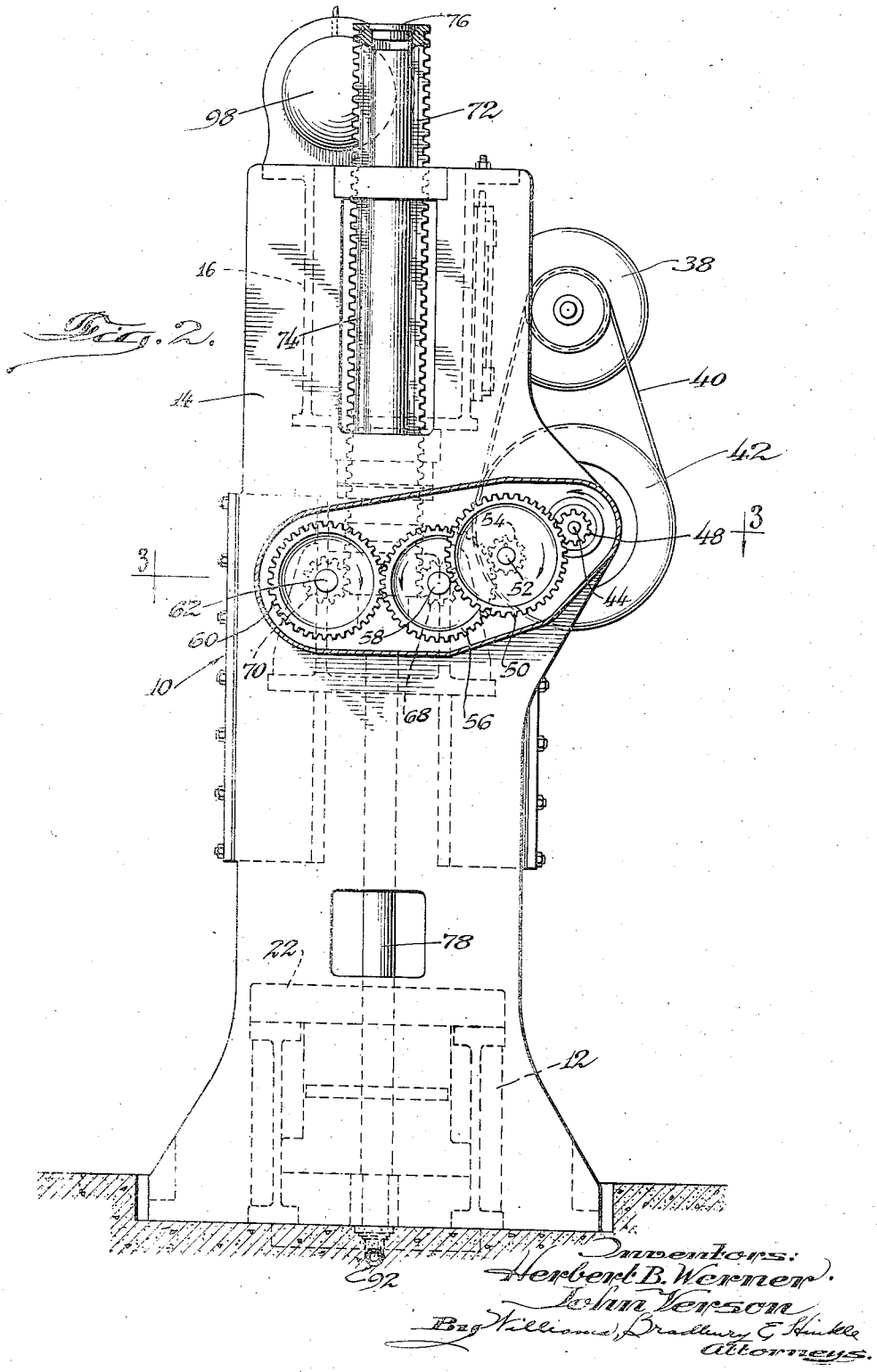


Inventors:
Herbert B. Werner.
John Verson
By Williams, Bradbury & Hinkle
Attorneys.

Aug. 6, 1946. H. B. WERNER ET AL 2,405,537

PUNCH PRESS

Filed March 19, 1943 5 Sheets-Sheet 3

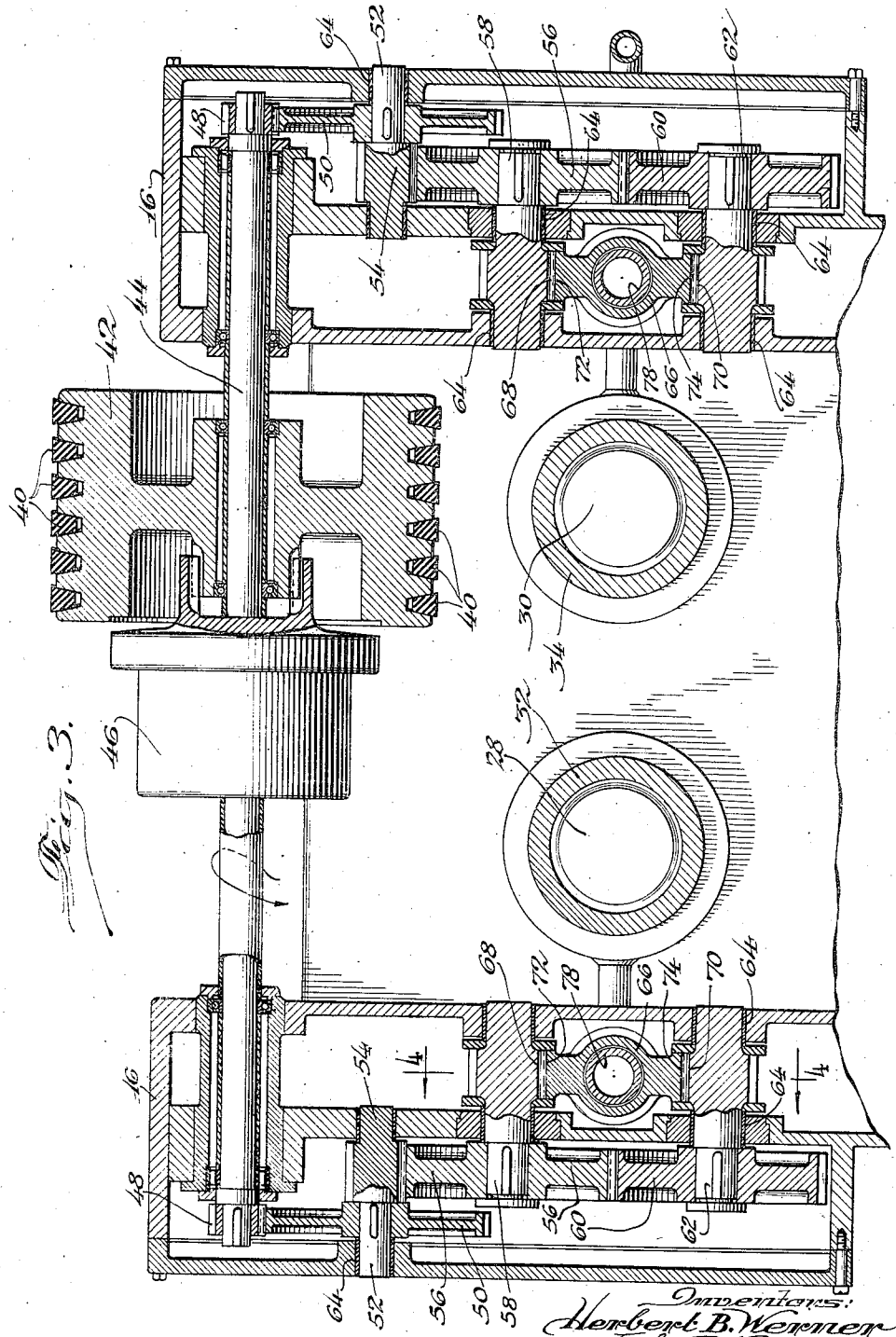


Fig. 3.

Inventors:
Herbert B. Werner
John Verson
By Williams, Bradbury & Shields
Attorneys.

PUNCH PRESS

Filed March 19, 1943 5 Sheets-Sheet 4

Fig. 4.

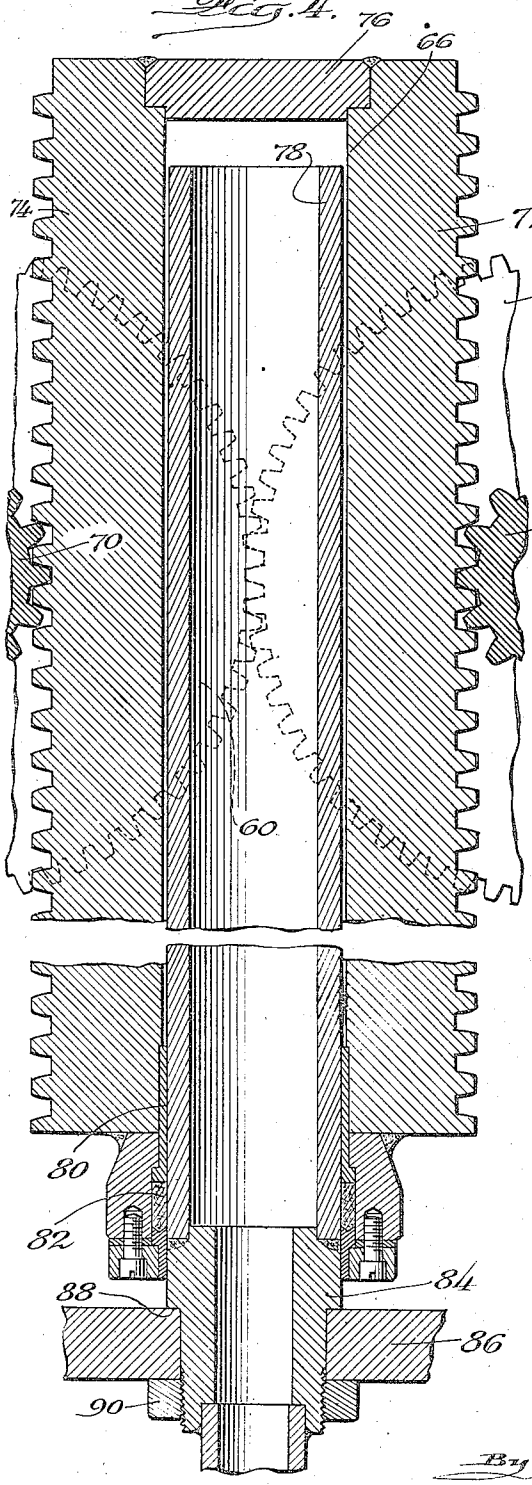


Fig. 5.

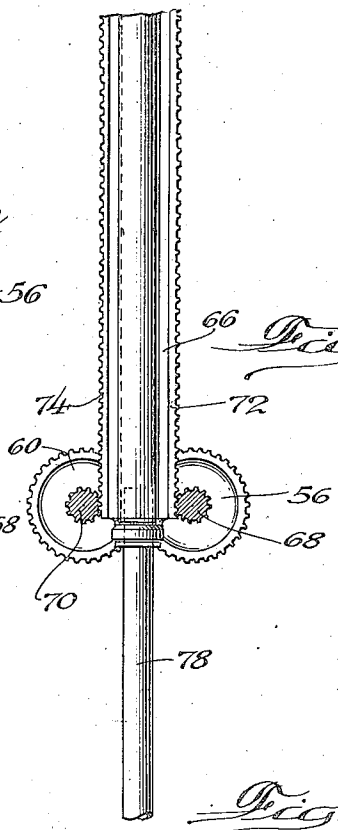


Fig. 6.

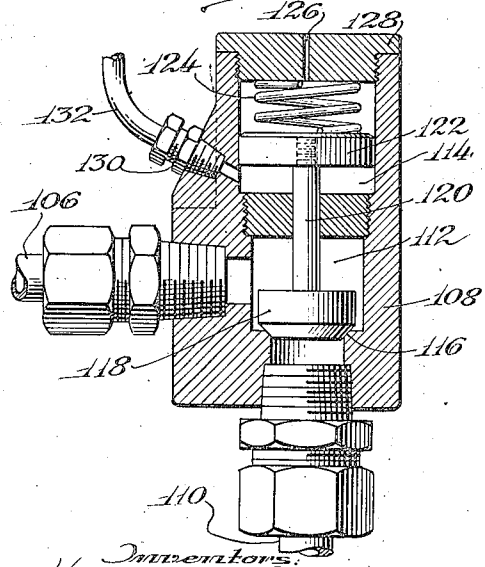


Inventors:
Herbert B. Werner
John Verson
By Williams, Bradbury & Hulse
Attorneys.

Aug. 6, 1946. H. B. WERNER ET AL 2,405,537

PUNCH PRESS

Filed March 19, 1943 5 Sheets-Sheet 5

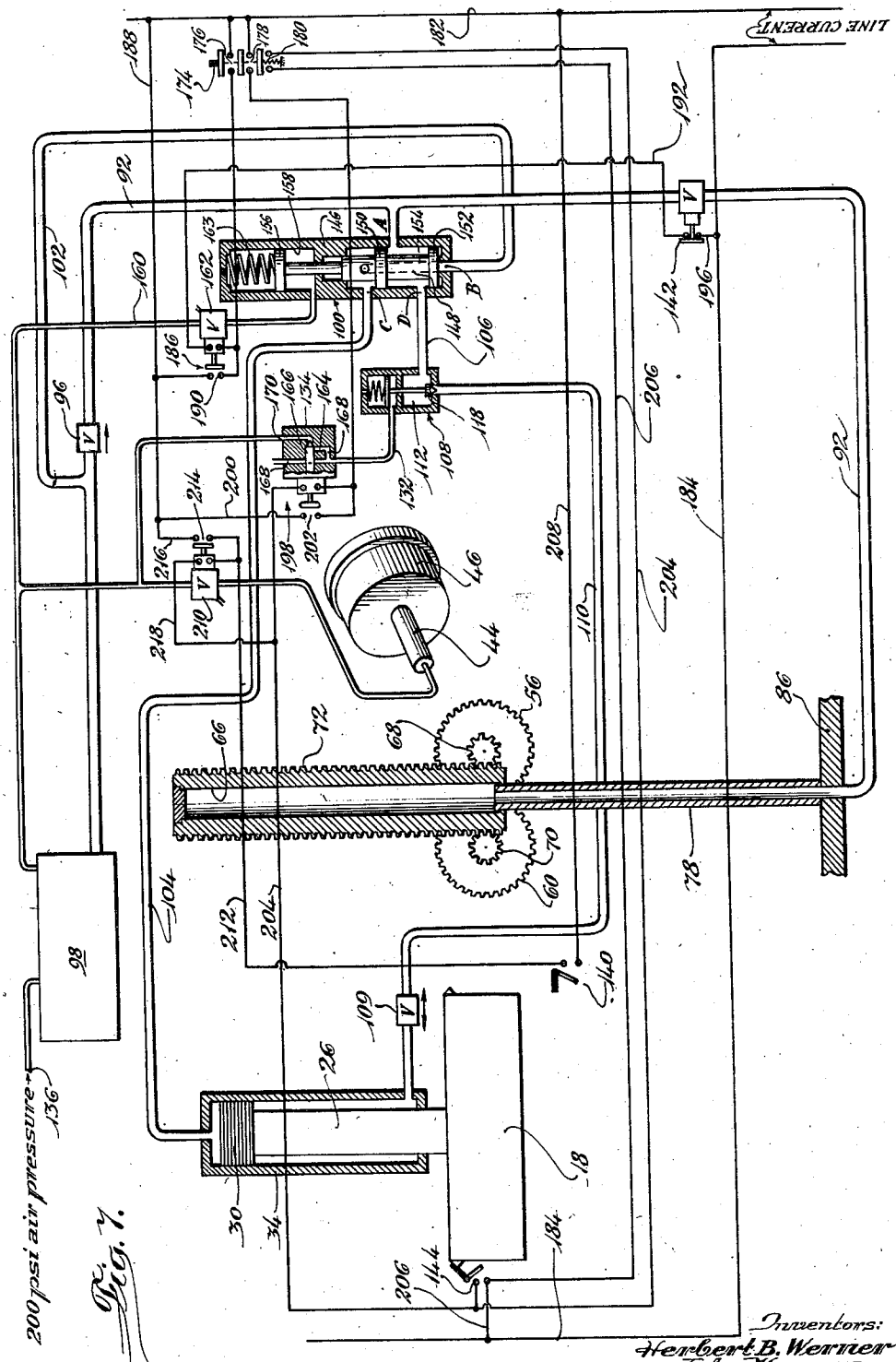


FIG. 7.

Inventors:
Herbert B. Werner
John Verson
By Williams, Bradbury & Hinkle Attorneys.

Patented Aug. 6, 1946 2,405,537

# UNITED STATES PATENT OFFICE

2,405,537

## PUNCH PRESS

Herbert B. Werner and John Verson, Chicago, Ill., assignors to Verson Allsteel Press Company, Chicago, Ill., a corporation of Delaware

Application March 19, 1943, Serial No. 479,694

14 Claims. (Cl. 60—54.5)

1

The present invention relates to punch presses, and is more particularly concerned with the provision of a metal drawing press of novel construction having a combination of advantageous features not heretofore found in any one type of press.

Punch presses or metal drawing presses as heretofore constructed have usually been either of the mechanical type or of the hydraulic type. Each of these types of presses has well known advantages and disadvantages, and in general the choosing of a particular type of press—mechanical or hydraulic—is governed largely by whether the advantages more than compensate for the disadvantages of that type in the particular operation to be performed. For a better understanding of the present invention, the generally admitted advantages and disadvantages of mechanical and hydraulic presses are given below.

A mechanical press usually comprises an electric motor which rotates a heavy flywheel, this rotating flywheel being periodically connected by means of a clutch to a crankshaft or eccentric shaft which drives the slide whenever the clutch is engaged. With this construction, therefore, a large amount of energy can be stored in the flywheel which runs continuously. Thus, whenever the crank is connected to the flywheel the energy necessary for driving the crank comes partially from the electric motor, but largely from the inertia of the flywheel. Therefore, if desired, a momentary high tonnage well in excess of the press rated capacity can be reached. Another important advantage is that if the press operation requires the use of a comparatively long slide, two cranks and two connecting rods can be used for driving the slide, it being quite simple to apply pressure from the two connecting rods evenly so as to move the slide downwardly always in a position parallel to the bed even though the die load may be unequally distributed upon the slide.

One of the important disadvantages of the mechanical press is that the slide does not move at a constant velocity, its maximum velocity being attained at approximately the mid-point in the stroke, while at the bottom of the stroke the velocity is substantially zero. This is well known to be a decided disadvantage in drawing metals. The tonnage which can be exerted by the slide is of course the reverse; that is, the press exerts the least tonnage at the mid-point in its stroke, and the maximum tonnage at the lower end of its stroke. One effect of this is that if the dies are improperly adjusted, they may come solidly together before the slide has reached its lowermost position at a point in the press stroke where the tonnage exerted by the slide is theoretically almost infinite. It is apparent, therefore, that

2

some element of a mechanical punch press will almost certainly be broken if the two dies come solidly together just before the slide reaches the lowest point in its stroke. Yet another disadvantage of mechanical presses is that they must be designed for some certain stroke, and therefore work which permits the use of a shorter stroke nevertheless requires that the press go through a complete time consuming cycle even though during the major portion of the cycle the press is accomplishing no useful function.

One of the most desirable features of a hydraulic press is that it is comparatively easy to obtain a uniform speed of slide movement, which is well known to be desirable in drawing metals. Further, a hydraulic press will carry its rated tonnage through the full stroke of its draw period, which as has been explained, is impossible in a mechanical press since the tonnage which can be exerted by the slide varies, depending upon the angle between the crank arm and the connecting rod. Another advantage of the hydraulic presses is that such presses can be easily made in such a manner that the stroke of the slide can be adjusted to suit the work at hand. For instance, a hydraulic press designed for a 24-inch stroke can be adjusted to work at a 10-inch stroke, thereby greatly increasing the number of working cycles during any particular time interval.

Hydraulic presses constructed a few years ago were frequently of the accumulator type, in which fluid under pressure is accumulated within a reservoir, the reservoir being connected to the press cylinder whenever movement of the press slide is desired. Such an accumulator system, in addition to the danger present when large reservoirs are filled with fluid under high pressure, also has the disadvantage that the flow of fluid to the press cylinder from the accumulator reservoir must be throttled, as otherwise the slide will move at extremely high velocity. This throttling was usually accomplished by means of valves, which greatly reduced the efficiency of the press since they absorbed considerable energy. Presses of the accumulator type for this and other reasons therefore have not received favorable attention in recent years because of the development of modern high speed hydraulic press pumps.

Hydraulic presses using high speed pumps cause fluid under pressure to flow directly from the pumps to the press cylinder, the speed of movement of the slide being largely controlled by the volumetric output of the pump. The reciprocating plungers in high speed pumps of this type cause shearing of the oil film, which raises the temperature of the oil considerably. As the viscosity of the oil depends quite largely upon its temperature, elaborate and expensive cooling systems must be employed to dissipate the heat generated by the high speed pumps. If the tempera-

ture of the oil is not controlled, the oil will thin out and cause the pump to operate at very low efficiency.

Inasmuch as the horsepower of the motor which drives the pump must at least equal the horsepower output of the pump, hydraulic systems of this type having no provision for storing energy such as in a flywheel, a hydraulic press cannot operate at peak loads which require more power than is available in the motor. For this reason the horsepower output of the electric motor for driving a hydraulic press usually must be about three times that necessary to drive a mechanical press of equal tonnage rating.

Another disadvantage of hydraulic presses is that when a comparatively wide slide is used, it is not practical to use two cylinders for driving the slide if there is the possibility of encountering an eccentric load, and such loads are not at all unusual. As an example, suppose a hydraulic press having two cylinders working side by side, suppose further that the slide in such a press meets an eccentric load, thereby imposing a greater load upon one cylinder than the other. The effect is that the two hydraulic cylinders will continue to exert the same force, and the slide will therefore be tilted, causing it to bind and also causing an uneven approach of the dies. In fact, if the eccentricity of the load is considerable, the press will most certainly be wrecked, since no press frame can endure such wracking.

With the above advantages and disadvantages of mechanical and hydraulic presses in mind, it is the purpose of the present invention to provide a press having the combined advantages of mechanical presses and hydraulic presses without their accompanying disadvantages.

Yet another object of the present invention is to provide a novel press combining the desirable qualities of both mechanical and hydraulic presses.

A further object of the present invention is to provide a novel metal working press having the following features:

Momentary high pressures beyond the normal capacity of the press are obtainable;

The slide can move at a uniform velocity during the drawing portion of the cycle;

A rapid approach to the work is provided, as is a rapid return, together with adequate stripping force;

The press exerts a constant force throughout the entire draw period;

The length of stroke is easily adjustable;

Power can be stored in a flywheel so as to take care of peak loads beyond the capacity of the prime mover used to energize the press;

Long slides can be used in conjunction with multiple slide cylinders without eccentric loads causing wracking of the press;

High coining pressures can be obtained at the bottom of the stroke;

Safety arrangements can be easily incorporated to return the slide whenever the tonnage approaches an unsafe level;

No high speed pistons are used, and therefore the oil is not heated, thereby dispensing with the need of an elaborate cooling system;

If desired, water may be used as the hydraulic fluid rather than oil, with the result that small leaks do not cause an accumulation of messy oil pools; and

The initial investment necessary to supply oil is not required.

Other objects and advantages will become apparent from the following description of a preferred embodiment of our invention illustrated in the accompanying drawings, in which similar characters of reference to similar parts throughout the several views.



In the drawings,

Fig. 1 is a front elevation of a metal drawing press incorporating the present invention, a portion of the crown being broken away to illustrate one of the press cylinders in vertical section;

Fig. 2 is a side elevation of the press illustrated in Fig. 1, a portion of the gear housing being illustrated in vertical section better to disclose the gear train;

Fig. 3 is a sectional view taken in the direction of the arrows substantially along the line 3—3 of Fig. 2;

Fig. 4 is a fractional vertical sectional view taken in the direction of the arrows along the line 4—4 of Fig. 3;

Fig. 5 is a fractional view illustrating a portion of the hydraulic drive mechanism in the position it assumes when at rest before the beginning of a press stroke;

Fig. 6 is a sectional view of a holding valve used in the press illustrated in the before mentioned figures; and

Fig. 7 is a schematic view of the right side of the press of Fig. 1 showing the hydraulic and control circuits.

In the drawings the punch press frame is indicated generally by the numeral 10. At the lower portion of this frame a bed 12 is secured to side members 14, the upper ends of the side members being connected to a crown 16. A slide 18 is located between the side members 14 and reciprocates in guides 20. The punch press dies, not shown, are arranged with the lower die element resting upon a bolster plate 22 secured to the bed 12, while the upper die element is secured to the lower face of the slide 18.

The upper surface of the slide 18 is connected to the lower ends of a pair of piston rods, the left-hand rod in Fig. 1 being indicated by the numeral 24, while the righthand rod is numbered 26. These rods are provided at their upper ends with pistons 28 and 30, respectively, which reciprocate in cylinders 32 and 34, respectively.

The piston rods 24 and 26 are somewhat smaller in diameter than the pistons 28 and 30 and pass through packing glands 36 arranged at the lower ends of the cylinders. Thus, any given quantity of fluid forced into the upper portions of the cylinders will produce a less displacement of the pistons and rods than will the same volume of fluid when forced into the lower portions of the cylinders.

The drive system for the press comprises an electric motor 38 connected by a plurality of belts 40 to a flywheel 42. This fly wheel is journaled to rotate upon a shaft 44 extending transversely of the press, the ends of the shaft being journaled in the sides of the crown 16. A clutch 46 of any suitable type such as that shown in United States Letters Patent No 2,286,943, is secured to the shaft 44 and is adapted when engaged to connect the flywheel 42 to drive the shaft 44. Therefore, whenever the clutch 46 is disengaged the motor 38 drives the flywheel 42 at a comparatively uniform velocity. Whenever the clutch 46 is engaged, the shaft 44 rotates at flywheel speed, the energy stored in the flywheel being transferred to this shaft.

Inasmuch as the arrangement of the mecha-

nism at one side of the press is substantially the reverse complement of the mechanism at the other side, only that the righthand side of the press will be described in detail, similar numbers being applied to similar elements at the lefthand side.

Each end of the shaft 44 is keyed to a pinion 48 which meshes with a larger gear 50 keyed to a short gear shaft 52. This shaft 52 in turn is provided with a pinion 54 which drives a larger gear 56 keyed to a shaft 58. The gear 56 is in turn meshed with another gear 60 of identical size mounted upon a shaft 62 substantially identical to the shaft 58, it being understood that the shafts 52, 58 and 62 are suitably journaled in the press crown in bearing sleeves 64. When the clutch 46 is engaged so that the flywheel 42 rotates the shaft 44, it is apparent that this drive, being communicated from the pinion 48 to the gear 50, from the pinion 54 to the gear 56, and from the gear 56 to the gear 60, will drive the shafts 58 and 62 at reduced speed and in opposite directions.

The shafts 58 and 62 are spaced on opposite sides of a pressure cylinder 66, to be described presently, and are provided with pinions 68 and 70, respectively. These pinions 68 and 70 are meshed with vertically extending racks 72 and 74 which are secured to the sides of the pressure cylinder 66, so that when the clutch 46 is engaged with the flywheel 42 rotating, the racks 72 and 74 and the pressure cylinder 66 will be driven downwardly.

The pressure cylinder 66, although it may be of any suitable length depending upon the particular press, is in the present embodiment of the invention shown as being approximately half the height of the press in length. This pressure cylinder is closed at its upper end by a cap 76 which may be welded or otherwise suitably secured in place. The pressure cylinder telescopes over a tube 78 having a length slightly less than that of the pressure cylinder. At its lower end the pressure cylinder is equipped with a sleeve 80 in sliding contact with the tube 78, while just beneath this sleeve the cylinder is hydraulically sealed to the sleeve by a packing gland 82.

The lower end of the tube 78 is welded or otherwise suitably secured to a tubular fitting 84 which passes through a support plate 86 located in the base of the press. The fitting 84 is provided with a shoulder 88 which rests against the upper surface of the plate 86 and is held rigidly in place by a nut 90 threaded to the fitting 84 in a position beneath the plate 86.

When the press is at rest with the slide in its uppermost position, the lower end of the cylinder 66 is slightly below the pinions 68 and 70 (Fig. 5). These pinions therefore mesh with the lower portions of the racks 72 and 74, the racks and cylinder extending upwardly into a position somewhat above the press crown. When the cylinder 66 is in its lowermost position, the lower end of the cylinder is brought to a position near the lower end of the tube 78, the upper ends of the racks 72 and 74 then being located somewhat above the pinions 68 and 70 (Fig. 4). As has been previously mentioned, the mechanism just described located at the righthand side of the press is duplicated by smilar mechanism at the lefthand side.

The fittings 84 at the lower ends of the tubes 78 are connected to hydraulic conduits, the one to the right being indicated by the numeral 92 while the similar pipe connected to the lefthand



tube is indicated by the numeral 94. The pipe 92 is connected through a check valve 96 to a hydraulic storage receptacle 98. The check valve 96 is so positioned in the line as to permit flow of fluid from the receptacle 98 downwardly into the pipe 92 but to prevent flow in the reverse direction. Between the tube 78 and the check valve 96 the pipe 92 is connected to an opening A in a 4-way valve 100, shown schematically in Fig. 7. Another opening B of this valve is connected to a pipe 102 leading to the pipe connecting the storage receptacle 98 with the check valve 96 so that there is free communication between the receptacle 98 and the opening B in the valve 100 at all times. A third opening C in the 4-way valve 100 is connected by a pipe 104 with the space in the cylinder 34 above the piston 30. A fourth opening D of the valve 100 is connected by a pipe 106 to the inlet opening of a holding valve 108, this valve being illustrated in greater detail in Fig. 6. Still another pipe 110 connects the space in the cylinder 34 beneath the piston 30 with the outlet side of the holding valve 108.

Referring to Fig. 6, it will be seen that the holding valve 108 comprises a valve body having a lower chamber 112 and an upper chamber 114. The lower chamber has a side port leading to the pipe 106, and a valve seat 116 communicating with the pipe 110. A conical valve 118 is located within the chamber 112 and prevents communication between the pipes 106 and 110 whenever it is pressed against the seat 116. This valve 118 is connected by means of a stem 120 with a piston 122 located in the upper chamber 114. A coil spring 124 is located above the piston 122 and biases the piston 122 and valve 118 downwardly, the space above the piston 122 being vented to the atmosphere through a port 126 in a cap 128 which closes the upper end of the chamber 114. The lower portion of this chamber 114, that is, the portion below the piston 122, communicates through a fitting 130 with an air pipe 132, the air pipe being in turn connected to the upper portion of the storage receptacle 98 through an air valve 134.

The valve 100 is of a standard type and comprises a housing 146 in which slides a shiftable spool 148 having a pair of pistons 150, 152 thereon; the spool 148 is bored at 154 to provide communication between the outer faces of the pistons 150, 152. The spool is connected to a piston 156 slidable in an air cylinder 158 which is in communication with the 200 pounds per square inch air pressure source through conduit 160 controlled by a solenoid operated valve 162. The piston 156 is biased against the air pressure by a spring 163. When in one position—the rest and return position—the valve 100 connects the opening A with the opening D and the opening B with the opening C, and when in the other position—the pressing position—the valve connects the opening A with the opening C, and the opening B with the opening D.

The air valve 134 (Fig. 7) may be of the solenoid operated type, and in one position it vents the pipe 132 to the atmosphere through port 164 in valve body 166 and port 168. In the other position it connects the pipe 132 to the reservoir through the ducts 168 and 170 in the valve housing.

The piping and valves just described connected to the cylinder 34, the receptacle 98, and pipe 92, are duplicated on the opposite side of the press, this lefthand piping connecting the pipe 94, the cylinder 32 and the receptacle 98. An air pipe

136 leading to any suitable source of pneumatic pressure is connected to the upper portion of the receptacle 98 and is used to maintain this receptacle under a suitable comparatively constant pressure, for example a pressure of approximately 200 pounds per square inch.

The operation of the press will be described primarily with reference to Figs. 1 and 7.

The above described press operates in the following manner: When at rest, the receptacle 98 is partially full of hydraulic fluid, the remaining portion being filled with air at approximately 200 pounds per square inch pressure through the pipe 138. This pneumatic pressure of 200 pounds per square inch is also communicated to the air valves 134, 162, and 172 (the latter valve controlling the operation of the clutch 46); but when the press is at rest these valves are closed and thus no air under pressure reaches the chamber 114 beneath the piston 122 in the valves 108 or the cylinder 118 in the valve 100. The springs 124 therefore urge the valves 118 into their seats so as to prevent communication between the pipes 110 and the pipes 106. Hydraulic fluid in the cylinders 32 and 34 beneath the pistons therefore cannot escape through the pipes 110, and thus the slide is maintained in its upper position by the valves 108 even though the pneumatic pressure may fail.

When the press is at rest, the spool of the valve 100 is so positioned that the opening A is connected to the opening D, while the opening C is connected to the opening B. The pressure of 200 pounds per square inch therefore is communicated through the check valve 96 and pipe 92 to the opening A and thence to the opening D, while similarly this same pressure is communicated through the pipe 102 to the pipe 104 since openings B and C are connected in the valve 100. The pressure in the upper portion of the cylinder 34 is therefore 200 pounds per square inch.

To condition the press for operation, the motor 38 is energized so as to bring the flywheel 42 up to speed. The press cycle is then started by pressing button 174 to close switches 176, 178, and 180, which are connected to the source of electrical power 182, 184 through suitable circuits to be hereinafter described. Closing switch 176 energizes the solenoid controlling valve 162 to close holding circuit 186 through conductor 188, switch 190, solenoid conductor 192, normally closed switch 142 and conductor 196 to the line 184, and to connect the cylinder 158 with the top of the reservoir 98 to shift the spool 148 to pressing position.

Closing switches 178 and 180 energize the solenoid controlling the valve 134 to close the holding circuit 198 through conductor 188, conductor 200, switch 202, solenoid conductor 204, switch 180 and conductor 206 to line 184, and to connect the chamber 114 below the piston 122 with the top of the reservoir 98 to open the valve 134.

After the slide 18 has started to descend toward the press bed, upper position limit switch 144 closes. The terminals of limit switch 144 are in parallel with the terminals of switch 180 so that the operator can release the start button 174 as soon as the slide 18 starts its descent.

The immediate effect of shifting the air valve 134 to such position that the air line is connected to the pipe 132, is to place the chamber 114 under a pressure of 200 pounds per square inch. This pressure opposes the spring 124 and the 200 pounds per square inch pressure in the chamber 112 and lifts the piston 122, thereby raising the valve 118 from its seat so as to permit communication between the pipes 106 and 110. This permits hydraulic fluid to flow from the spaces in the cylinders 32 and 34 beneath the pistons 28 and 30 outwardly through the pipes 110, through the valves 108, through the pipes 106, and thence through the valves 100 into the lines 102 to the reservoir 98.



At the same time, the connections made between openings A and C of the valves 100 permit hydraulic fluid to flow from the reservoir 98 through the check valves 96, through the valves 100 and pipes 104 to the upper portions of the cylinders 32 and 34. It is seen, therefore, that the unit area pressure on both sides of the pistons 28 and 30 is the same. However, since the areas of the upper faces of these pistons are greater than the areas of their lower faces, the pistons will be urged downwardly. This force is also augmented by the weight of the slide 18, the dies, and the piston rods 24 and 26 together with their pistons 28 and 30. The result is that the slide 18 drops rapidly, its rate of descent being limited by the rate at which fluid can flow through the adjustable throttling valves 109 located in the pipes 110.

Just before the dies contact the work, a limit switch 140 is tripped to closed position by the slide 18. This limit switch is connected to line 182 by conductor 208 and to the solenoid controlling valve 201 by conductor 212. The other side of the solenoid is connected to the line 184 through conductor 218, conductor 204, switch 144, and conductor 206. When the solenoid is energized, switch 214 in a holding circuit is closed and the solenoid is connected to line 182 through switch 214, conductor 216, and conductor 188. Actuation of the valve 210 connects the clutch operating mechanism with the top of the reservoir 98, and the mechanism operates to engage the clutch 46, with the result that the flywheel 42 starts driving the cylinders 66 downwardly thereby forcing hydraulic fluid from these cylinders through the pipe 78 into the lines 92 and 94. The rise in pressure in the lines 92 and 94 immediately closes the check valves 96 and builds up a working pressure in the lines 92 and 94 which is communicated through the valves 100 and pipes 104 to the upper portions of the cylinders 32 and 34. The pistons 28 and 30 are therefore urged downwardly at great force by the hydraulic pressure produced in the cylinders 66. The slide therefore continues to move downwardly, thereby drawing the metal to the desired shape.

At the end of the press stroke the pressure in the lines 92 and 94 rapidly builds up and opens one or the other or both of a pair of pressure switches 142 located in these lines. When either switch 142 is opened it breaks the circuit to the solenoid operated valve 162 which shifts to closed position and to vent the cylinder 158 to the atmosphere. The spring 163, pressing against the piston 156, shifts the spool 148 in the valve 100 to connect opening A to opening D and opening C to opening B. Both valves 100 operate together. Continued downward movement of the cylinders 66 therefore forces additional fluid under pressure through the valves 100, into the pipes 106, through the holding valves 108 and through the pipes 110 into the lower portions of the cylinders 32 and 34. At the same time the upper portions of these cylinders 32 and 34 are connected through the pipes 104 to the valves 100 and the pipes 102 to the reservoir 98. The result is that the pressure beneath the pistons 28 and 30 far

exceeds that bearing against the upper faces of these pistons. Therefore the slide 18 moves upwardly so as to strip the dies.

As the slide 18 approaches the upper end of its stroke, it trips the limit switch 144, which breaks the circuit to the solenoid controlling valves 210 and 134. The valve 210 vents the clutch operating mechanism to the atmosphere to permit disengagement of the clutch 46, and the pipe 132 is vented to the atmosphere through the port 164 and vent duct 168 in the valve 134. The springs 124 therefore seat the valves 118 so as to prevent escape of fluid from the lower portions of the cylinders 32 and 34. The slide 18 therefore remains in its uppermost position. Simultaneously disengagement of the clutch removes the drive from the cylinders 66, with the result that the pressure in the pipe 92 immediately drops to 200 pounds per square inch, the pressure in the reservoir 98, and closes the pressure operated switches 142 to condition the control circuit for another cycle. This pressure of 200 pounds per square inch acting within the cylinders 66, in the absence of any connection between the flywheel 42 and the shaft 44, causes the cylinders 66 to move upwardly, thereby reversing the direction of rotation of the gear train and shaft 44. This upward movement of the cylinders 66 continues until the cylinders have reached their uppermost positions, whereupon the cycle of the press is completed.

The valves 100 and 134 are shown only schematically and the valves 162 and 210 may be similar to the valve 134. The actual construction and operation of such valves is well known and need not be set out in detail.

If it is assumed that a press operating in the manner above described encounters an eccentric die load which throws the major portion of the load to one side of the slide 18, it is apparent that any tendency of the slide to tilt will immediately cause a drop in pressure in the upper portion of the cylinder 32 or 34 connected to the downwardly tilting side of the slide, since the two cylinders cylinders 66 which furnish the hydraulic pressure to the cylinders 32 and 34 travel downwardly together. In other words, the action is substantially the same as that which takes place in a mechanical press in that one side of the slide cannot be lower than the other and still receive power from the driving mechanism, whereas in a hydraulic press of ordinary construction the pressures in the two cylinders tending to force the slide downwardly remain constant regardless of the degree to which the slide tilts. It will be seen further that by an appropriate setting of the two limit switches 140 and 144 and the pressure switch 142, the point at which the slide begins its stroke, the point at which it ends its stroke, and the point at which the high working pressure is applied to the slide, all can be easily controlled so as to give the slide any desired working stroke and any desired approach stroke within the maximum capacity of the press.

If a high coining pressure is desired, the pressure switches 142 can be set to a comparatively high value so that a high pressure will be produced by the dies before the direction of movement of the slide is reversed. On the other hand, if no substantial coining pressures are desired, the pressure switches 142 can be set to a low value.

From the above it will be seen that a metal working press embodying features of the present invention combines advantages of mechanical presses and hydraulic presses without the important disadvantages commonly associated with either mechanical presses or hydraulic presses of conventional design.

Having thus described our invention, what we claim as new and useful and desire to secure by Letters Patent of the United States is:

1. In a punch press comprised of a frame, a slide reciprocable in the frame, and hydraulic cylinder and piston means for reciprocating said slide, a source of fluid under low pressure, means for connecting said low pressure source to said hydraulic cylinder and piston means so that pressure will be applied therefrom to operate said hydraulic cylinder and piston means to drive said slide during the initial phase of its downward stroke, a hydraulic pressure means for operating said hydraulic cylinder and piston means under high pressure comprising a rotatable flywheel, means for rotating said flywheel, a rotatable shaft, clutch means for connecting said flywheel to said shaft, means driven from said shaft for compressing fluid and for passing the compressed fluid to said hydraulic cylinder and piston means during the work phase of the downward stroke of said slide, and means for connecting said low pressure source to said fluid compressing means to return it to initial position.

2. Hydraulic pressure producing apparatus to be incorporated in a hydraulic punch press, comprised of a frame, a slide reciprocable in the frame and a hydraulic cylinder and piston means for reciprocating said slide, said apparatus comprising a cylinder having a volumetric capacity sufficient so that one compression stroke of said cylinder will deliver adequate hydraulic fluid to move said slide through a complete cycle, conduit means for connecting said cylinder to both ends of said hydraulic cylinder and piston means so that when fluid is delivered from said cylinder to said hydraulic cylinder and piston means at one end said slide will be moved downwardly and when said fluid is delivered to said cylinder and piston means at the other end said slide will be moved upwardly, valve means in said conduit adapted to deliver hydraulic fluid first to the first mentioned end of said hydraulic cylinder and piston means and later to the other end of said hydraulic cylinder and piston means, a holding valve to prevent escape of fluid from the said second end of said hydraulic cylinder and piston means when said press is idle, a rotatable flywheel, means for rotating said flywheel to store energy therein, rotatable driving means for operating said apparatus, and clutch means for connecting said flywheel to said rotatable driving means.

3. In a punch press, a frame, a slide reciprocable in the frame, cylinder and piston means for reciprocating said slide, a single stroke pressure producing hydraulic cylinder, valve and conduit means for connecting said pressure producing cylinder to one end of the cylinder and piston means to move said slide downwardly or alternatively to the other end of said cylinder and piston means to move said slide upwardly, rotatable means for operating said pressure producing cylinder, a rotatable flywheel, means for rotating said flywheel to store energy therein, clutch means for connecting said flywheel to said rotatable means for operating said cylinder, a reservoir for storing hydraulic fluid, means for maintaining said reservoir under a low pressure, and valve and conduit means connecting said reservoir to said pressure producing cylinder so that hydraulic fluid in said reservoir under a low pres-

sure is adapted to return said pressure producing cylinder to its extended position.

4. A press comprising a frame, a slide reciprocable in the frame, hydraulic cylinder means for moving said slide downwardly when hydraulic fluid is forced into one end of said cylinder and to move said slide upwardly when hydraulic fluid is forced into the other end of said cylinder, a single stroke pressure producing cylinder adapted during each stroke in the pressure producing direction first to deliver hydraulic fluid to the first mentioned end of said cylinder and later to deliver hydraulic fluid to the other end of said hydraulic cylinder, control valve means for selectively connecting said pressure producing cylinder with either of the two opposite ends of said hydraulic cylinder, a rotatable flywheel, and drive means connecting said flywheel to said pressure producing cylinder, said drive means including a clutch.

5. In a hydraulic press, a slide, a plurality of press cylinders connected to said slide, a plurality of pressure producing pumps of the positive displacement type, means connecting each of said pumps to one of said cylinders, drive means for driving all of said pumps, the last said means including mechanical means interconnecting the drives of all of said pumps so that the volumetric displacement of each of said pumps matches the volumetric displacement of others of the pumps regardless of the pressure on the discharge side of said pumps so that all of said cylinders operating on said slide will displace said slide uniformly regardless of the load distribution upon said slide, said drive means being connected to said pumps at the start of the work phase of the slide by means actuated by said slide during its downward stroke.

6. In a punch press, a slide, a plurality of press cylinders for displacing said slide, and means for operating said cylinders to displace said slide uniformly regardless of the load distribution upon said slide, the last said means comprising a plurality of positive displacement piston and cylinder type pumps, conduit means connecting each of said pumps to one of said cylinders, each of said pumps being of large displacement so that a single stroke of each of said pumps will operate each of said cylinders through the work phase of the cycle and restore it to initial position, mechanical drive means interconnecting all of said pumps so as to drive all of said pumps at the same volumetric displacement rate, and means for imparting energy to said drive means.

7. The combination called for in claim 6, in which the means for imparting energy includes a rotatable flywheel, means for rotating said flywheel, and clutch means for connecting said flywheel to said drive means.

8. The combination called for in claim 6, in which the drive means includes rack means associated with each of the reciprocable elements of the piston and cylinder type pump, pinion means for driving said racks, and common drive means for rotating all of said pinions in synchronism.

9. In a punch press comprised of a frame, a slide, and cylinder means for reciprocating said slide, a pressure producing cylinder connected to the slide cylinder comprised of a tube, a cylinder arranged to telescope over said tube, said cylinder being provided with racks at each side thereof, a pair of pinions meshed with said racks, means interconnecting said pinions to synchronize the rotation of said pinions, gear train means for rotating said pinions, a rotatable flywheel, means for rotating said flywheel, and clutch means for connecting said flywheel to said gear train means.



10. A punch press comprising a frame, a punch slide, hydraulic cylinder and piston means connected to said slide to actuate said slide in said frame, a source of fluid under low pressure for said cylinder and piston means, a source of fluid under high pressure for said cylinder and piston means; said high pressure source comprising a reciprocable cylinder connected to said cylinder and piston means, a motor for driving said cylinder to build up a pressure in said cylinder and piston means, and means for connecting said motor to said high pressure cylinder during the work phase of the stroke of said slide.

11. A punch press comprising a frame, a slide reciprocable in said frame, hydraulic cylinder and piston means for driving said slide, a source of fluid under relatively low pressure, conduit means connecting said low pressure source to said cylinder and piston means during the initial phase of the downstroke of said slide, a source of fluid adapted to be subjected to relatively high pressure, and means connecting said high pressure source to said cylinder and piston means during the work phase of the downward stroke of said slide and during the return movement of said slide to its initial position.

12. A punch press comprising a frame, a punch slide reciprocable in said frame, hydraulic cylinder and piston means connected to reciprocate said slide, a source of fluid under low pressure, conduit means connecting said low pressure source to said cylinder and piston means to effect the initial phase of the downstroke of said slide, a source of fluid under high pressure, motor driven means for developing pressure in said high pressure source, conduit means connecting said high pressure source to said cylinder and piston means during the work phase of the downstroke of said slide, and pressure operated means to connect said high pressure source to said cylinder and piston means to restore said slide to its initial position.

13. A punch press comprising a frame, a punch slide, hydraulic cylinder and piston means for actuating said slide vertically in said frame, a source of fluid under relatively low pressure, means connecting said low pressure source to one end of said hydraulic cylinder and piston means to initiate downward movement of said slide, a reciprocable cylinder connected to said end of said hydraulic cylinder and piston means, motor means for reciprocating said cylinder to develop pressure therein, means for connecting said motor means to said reciprocable cylinder, said means being rendered effective by means actuated by said slide during its downward movement, and means actuated by means responsive to the pressure in said reciprocable cylinder to connect it to the opposite end of said hydraulic cylinder and piston means to restore the last said means to initial position.

14. The combination called for in claim 13 in which means connects said low pressure source to said second end of said hydraulic cylinder and piston means, and said means for connecting said motor means to said reciprocating cylinder is rendered ineffective, both said means being operated by means actuated by said slide as it is restored to its initial position.

HERBERT B. WERNER.
JOHN VERSON.