Aug. 14, 1945. A. DAVIS, JR 2,382,862

ARMORED CAR

Filed April 15, 1942

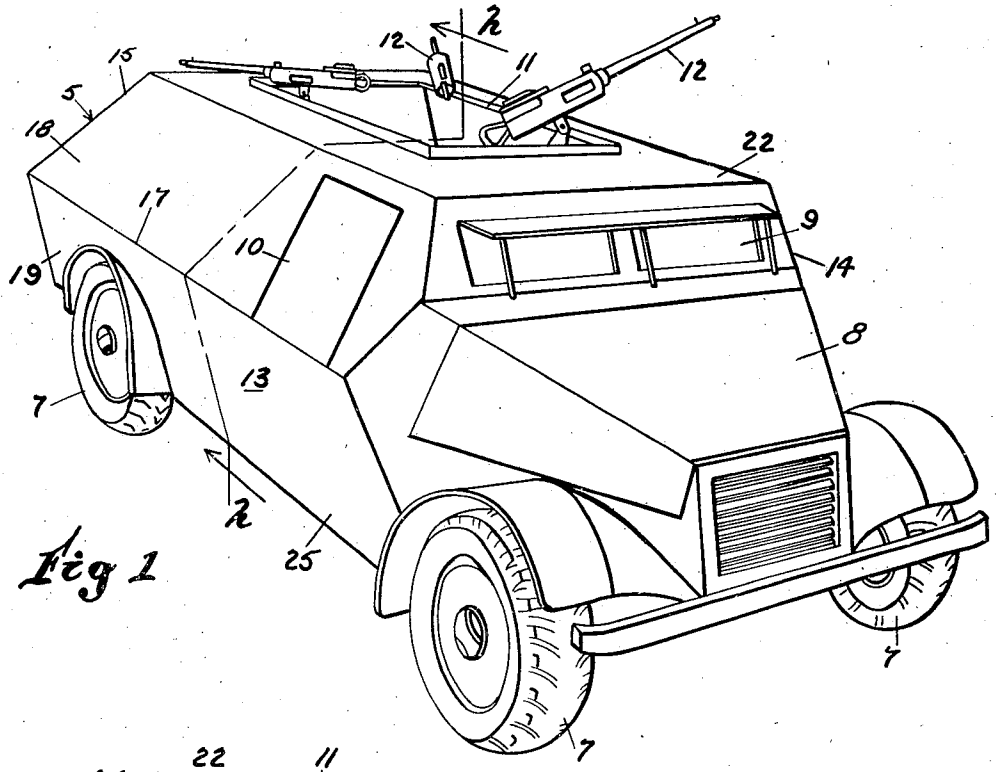

Fig 1

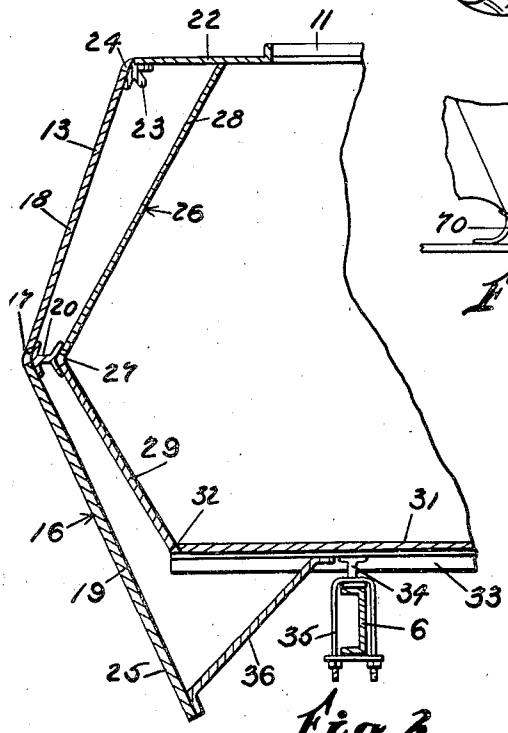

Fig 2

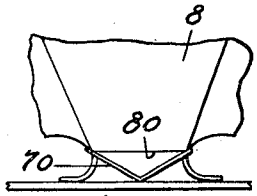

Fig 4

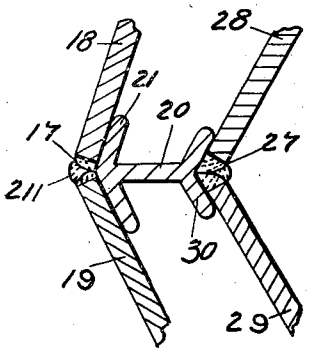

Fig 3

INVENTOR.
Augustine Davis, Jr.
BY Murray, Sachhoff & Paddack.
ATT'YS.

Patented Aug. 14, 1945

2,382,862

UNITED STATES PATENT OFFICE

2,382,862

ARMORED CAR

Augustine Davis, Jr., Cincinnati, Ohio

Application April 15, 1942, Serial No. 439,018

8 Claims. (Cl. 89—36)

The present invention relates to armored bodies for tanks, squad cars and tractors, and is particularly directed to improvements in the construction and disposition of parts for bodies of mobile war units.

An object of the invention is to provide a combat car body which is constructed from flat sheets of armoured plate and which presents all of said plates to gun fire at effective, incident angles thereto.

Another object of the invention is to provide an armored body constructed of substantially flat plates wherein tolerances need not be accurate, and therefore manufacturing steps need not be directed to the size of the plates comprising the armored body.

Another object of the invention is to provide an armored body which offers effective protection to its crew against gun fire even from a relatively high caliber gun by means of a minimum of armored plate and materials.

A further object of the invention is to provide a body construction which protects the crew and ammunition therefor against gun fire from positions above it, such as from airplanes or the like.

A still further object of the invention is to provide a comparatively light armored body which is simple to manufacture, requires a minimum of materials, and provides adequate protection to the occupants therein.

Other objects will be apparent from the following specification and drawing illustrating a preferred embodiment of my invention, in which:

Fig. 1 is a perspective view of my car body adapted for use as a squad car.

Fig. 2 is an enlarged cross-sectional view taken on line 2—2 of Fig. 1.

Fig. 3 is an enlarged detail view in cross-section showing a centrally located connection between the exterior and interior walls of my armored body.

Fig. 4 is a fragmental, top plan view of the squad car of Figure 1 showing a modified front therefor.

An embodiment of my invention consists of an armored body 5 supported upon a conventional chassis consisting of two spaced longitudinal frame members 6 (Fig. 2) which carry at their forward ends a motor (not shown) and which is mounted at the front and rear portions thereof on transverse axles through spring suspension members, said axles carrying traction wheels 7 in the conventional manner. The armored body is illustrated as having rectangular form in plan, but may be hexagonal or any other desired shape, and has a tapered hood 8 for housing and protecting the motor for the car. The forward end of the body is provided with the usual steersman's outlook windows 9 and side door 10 and has a rectangular opening 11 in its top side so that a crew may operate guns 12 mounted therein.

A modified form of a hood for my combat car is shown in Fig. 4 wherein a wedge-shaped armored plate 70 is mounted in front of the radiator grill 80 for the car and is vertically coextensive therewith to protect the motor from gunfire directed at the car from in front of it. The plate 80 permits air to enter the grill from the top and the bottom portions, but these openings may be shut off or closed by extending the hood plates forwardly to the plate to conform with varying motor cooling systems.

The side walls 13 and 14 and the rear wall 15 of the armored body are welded together along their adjacent edges and are formed in identical manner. As shown in Figs. 2 and 3, each side is constructed from a number of flat sheets of armored plate and consists of an exterior upstanding wall 16 having a projecting horizontal rib 17 disposed substantially centrally of the wall. An upper plate 18 and a lower plate 19 are connected along their adjacent edges at said rib portion 17 to an I-beam 20 which extends the entire length of the rib 17. The adjacent edges of the plates 18 and 19 are separately welded to the flange 21 of the I-beam and, as shown at 211 in Fig. 3, the space between the welds for said plates is again welded in a conventional manner. It will be noted that the exterior wall 16 bulges outwardly so as to form an obtuse interior angle between the plates 18 and 19 at the rib 17. A top plate 22 is connected to the top edge of the upper plate 18 by a T-beam 23 to which the adjacent edges of the upper plate and the top plate are welded, as indicated at 24, the bottom portion of the lower plate 19 serving as a protective skirt 25 for the under-carriage and chassis of the car.

Spaced interiorly from the wall 16 is an interior wall 26 also having a projecting rib 27 which is adjacent and parallel to the rib 17 of the exterior wall. The wall is formed by an upper flat plate 28 and a lower flat plate 29 which are welded at the rib 27 to an angular flange 30 of the I-beam 20. As shown in Fig. 2, the plates 28 and 29 are positioned relative to one another so as to form an obtuse angle between them which is smaller than the obtuse angle between the plates 18 and 19 of the exterior wall 16 whereby the respective upper and lower plates of the walls are in non-

parallel relationship and diverge outwardly from their respective ribs.

The body is provided with a flat floor or platform 31 which is welded as at 32 along its marginal edges to the lower edge of the plate 29 of the sides 13, 14 and 15. The floor is braced by a number of spaced transverse angle irons 33 which are welded to the bottom surface of the floor 31, I-beams 34 being welded to the angle irons and resting upon the frame members 6. U-bolts 35 are employed for fastening the I-beams 34 to the two, spaced longitudinal frame members 6 of the chassis. The skirt 25 of the outer wall is reinforced by brace members 36 which are welded at their lower ends to the lower edge of the skirt and at their upper ends welded to the channel irons 33 of the floor.

It will therefore be noted that an all-welded armored body is provided which has a number of flat plates, each presenting an effective angle of incidence to gunfire. As most clearly shown in Fig. 1, horizontally traveling bullets or shrapnel will, after striking the sides 18 and 19 of the tank, be deflected in an upward and downward direction respectively, and will therefore tend to ricochet off the plates. It is contemplated using a quarter inch armored plate for the combat car illustrated to effectively prevent gunfire from reaching the crew of said car. A reinforcing wall or walls are provided interiorly of the outer wall which is also constructed of flat plates set at an angle to the gunfire. The relation of the plates of the reinforcing wall relative to the outer wall is shown in Fig. 2 wherein the reinforcing wall presents a greater angle of incidence than the outer wall to horizontal gunfire in the event said fire penetrates the outer wall of the combat car. Because of the construction and disposition of parts of the plates the combat car can be made extremely light in weight and yet effectively protect its crew members.

What is claimed is:

1. A body for an armored car having each side formed of an exterior, upstanding wall having a projecting, horizontal rib, disposed substantially centrally thereof and dividing said wall into an upper and a lower portion, said portions forming an obtuse, interior angle between them at said rib, and a reinforcing wall, spaced interiorly from said exterior wall and having a projecting rib adjacent to and parallel with said first mentioned rib, and comprising an upper and a lower portion formed in the reinforcing wall by the rib and having a more acute, interior angle between them than said first mentioned angle whereby the respective upper and lower portions of the walls will be disposed in non-parallel relationship, diverging outwardly from the ribs.

2. A body for an armored car having a number of connected, upstanding sides constructed of substantially flat sheets of armored plate, each exterior wall therefor having a projecting, horizontal rib, substantially centrally thereof, upper and lower plates connected along adjacent edges at said rib and forming an obtuse, interior angle between them, and a reinforcing wall spaced interiorly from said exterior wall and having a projecting rib adjacent to and parallel with said first mentioned rib, and comprising an upper and a lower plate joined along adjacent edges at said rib and forming between them a more acute, interior angle than the first mentioned angle whereby the respective upper and lower plates of the walls are disposed in non-parallel relationship diverging outwardly from the ribs.

3. A body for an armored car constructed of substantially flat sheets of armored plate, said body comprising a flat platform, an interior, reenforcing wall having a projecting, horizontal rib substantially centrally thereof, upper and lower plates joined at the rib along their longitudinal, adjacent edges, and forming an interior obtuse angle between them, means for fastening the bottom edge of the lower plate to the edge of the platform, and an exterior wall spaced from the interior wall and having a projecting, horizontal rib adjacent the first mentioned rib, upper and lower plates joined at the rib along their adjacent, longitudinal edges and forming between them an obtuse angle greater than the first mentioned angle, and an integral skirt on the lower exterior plate depending below the intersection of said platform and the lower interior plate.

4. A body for an armored car constructed of substantially flat sheets of armored plate, said body comprising a flat platform, an interior, reenforcing wall having a projecting, horizontal rib substantially centrally thereof, upper and lower plates joined at the rib along their longitudinal, adjacent edges, and forming an interior obtuse angle between them, means for fastening the bottom edge of the lower plate to the edge of the platform, and an exterior wall spaced from the interior wall and having a projecting, horizontal rib adjacent the first mentioned rib, upper and lower plates joined at the rib along their adjacent, longitudinal edges and forming between them an obtuse angle greater than the first mentioned angle, an integral skirt on the lower exterior plate depending below the intersection of said platform and the lower interior plate, and a narrow, horizontal shelf, fastened at its outer edge to the upper edge of the outer wall, said upper plate of the interior wall being joined along its top edge to the underside of the shelf, intermediate its longitudinal edges.

5. A body for an armored car having an exterior, upstanding wall constructed of substantially flat sheets of armored plate, each side having a projecting, horizontal rib substantially centrally thereof, a longitudinal I-beam interiorly of the wall at the rib, upper and lower side plates welded along adjacent edges to the exterior flange of the beam and forming an obtuse, interior angle between them, and a reenforcing wall, spaced interiorly from said exterior wall and having a projecting rib adjacent to and parallel with said first mentioned rib, and comprising an upper and a lower plate welded along adjacent edges to the inner flange of the I-beam and forming between them a smaller interior angle than the first mentioned angle whereby the respective upper and lower plates of the walls are disposed in non-parallel relationship diverging outwardly from their I-beam connections.

6. A body for an armored car having an exterior, upstanding wall constructed of substantially flat sheets of armored plate, each side having a projecting, horizontal rib substantially centrally thereof, a longitudinal I-beam interiorly of the wall at the rib, upper and lower side plates welded along adjacent edges to the exterior flange of the beam and forming an obtuse, interior angle between them, a reinforcing wall, spaced interiorly from said exterior wall and having a projecting rib adjacent to and parallel with said first mentioned rib, and comprising an upper and a lower plate welded along adjacent edges to the inner flange of the I-beam and forming between them a smaller interior angle than the first mentioned

angle whereby the respective upper and lower plates of the walls are disposed in non-parallel relationship diverging outwardly from their I-beam connections, a T-beam welded to the top interior surface of the outer wall, and a narrow horizontal shelf welded along its adjacent edge to the T-beam.

7. A body for an armored car having an exterior, upstanding wall with a projecting, horizontal rib substantially centrally thereof dividing said wall into flat portions disposed in different planes, and a reinforcing wall spaced interiorly from the exterior wall and having a rib adjacent and parallel to the first mentioned rib, to divide the wall into two flat portions in different planes, adjacent flat portions for the interior and exterior walls diverging from each other outwardly from the ribs.

8. A body for an armored car having an exterior, upstanding wall with a projecting, horizontal rib substantially centrally thereof dividing said wall into flat portions disposed in different planes, a reinforcing wall spaced interiorly from the exterior wall and having a rib adjacent and parallel to the first mentioned rib, to divide the wall into two flat portions in different planes, adjacent flat portions for the interior and exterior walls diverging outwardly from the ribs, and a beam welded to the interior surface of the wall adjacent the rib and to the exterior surface of the reenforcing wall adjacent its rib.

AUGUSTINE DAVIS, JR.