Aug. 7, 1945. F. CARTER 2,381,646

TWO-CYCLE ENGINE

Filed Jan. 18, 1943 2 Sheets-Sheet 1

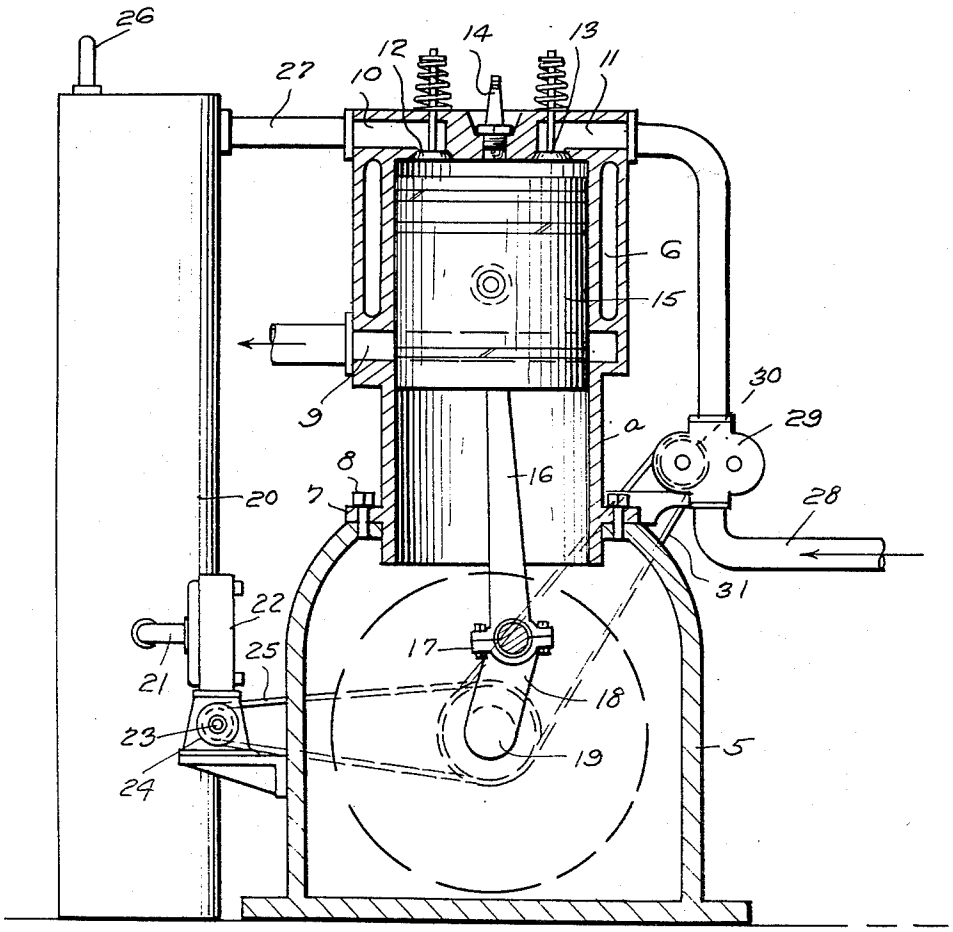

Fig. 1.

Inventor

Fred Carter

By Clarence A. O'Brien and Harvey B. Jacobson

Attorneys

Aug. 7, 1945. F. CARTER 2,381,646

TWO-CYCLE ENGINE

Filed Jan. 18, 1943 2 Sheets-Sheet 2

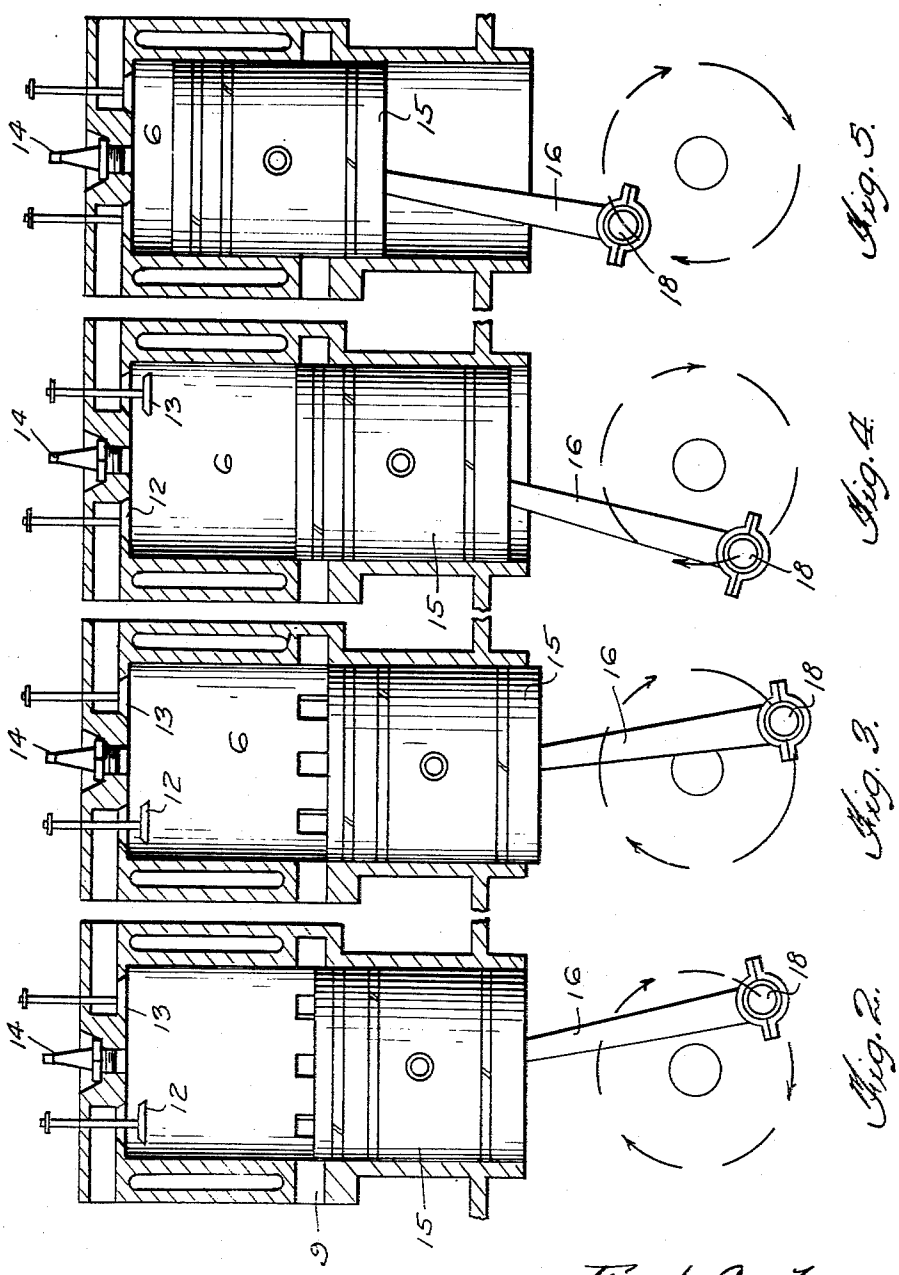

Inventor

Fred Carter

By Clarence A. O'Brien and Harvey B. Jacobson

Attorneys

Patented Aug. 7, 1945

2,381,646

UNITED STATES PATENT OFFICE

2,381,646

TWO-CYCLE ENGINE

Fred Carter, Tampa, Fla.

Application January 18, 1943, Serial No. 472,758

2 Claims. (Cl. 123—69)

This invention relates to new and useful improvements in internal combustion engines of the two-cycle type.

The principal object of the present invention is to provide a high speed internal combustion engine wherein the cylinders are scavenged by compressed air and the fuel supplied by a supercharger.

Another important object of the invention is to provide an engine which can be operated at a substantially higher rate of speed than most types of two-cycle engines now in general use without the incorporation of complicated mechanism.

Other objects and advantages of the invention will become apparent to the reader of the following description.

In the drawings—

Figure 1 represents a vertical sectional view through a single cylinder engine constructed in accordance with the present invention and showing the scavenging and supercharging means.

Figure 2 is a diagrammatic view showing the piston at the beginning of its scavenging position, with the compressed air valve open.

Figure 3 is a diagrammatic view showing the piston in position for full scavenging operation.

Figure 4 is a diagrammatic view showing the piston raised to a position closing off the exhaust openings and showing the intake valve open for admission of supercharged fuel.

Figure 5 is a diagrammatic view showing the piston as it has further compressed the supercharged fuel and in this act closed the intake valve.

Referring to the drawings wherein like numerals designate like parts, it can be seen in Figure 1 that numeral 5 denotes a crankcase for a stationary engine. The top of the case 5 has an opening therein for receiving the skirt portion *a* of a water-jacketed cylinder 6, the skirt *a* being flanged laterally as at 7 and bolted as at 8 to the top of the case 5.

The cylinder 6 is provided with a series of circumferentially spaced exhaust ports 9 at the lower portion of its water jacket, while at the head of the cylinder 6 is a compressed air inlet 10 for scavenging and an inlet port 11 for supercharged fuel. These ports are provided with spring-closed valves 12 and 13, respectively. Numeral 14 denotes the usual igniter plug in the head of the cylinder.

In the cylinder 6 is operative a piston 15 having a connecting rod 16 depending therefrom and connected by a bearing structure 17 to the crank 18 of a crankshaft 19.

Adjacent this engine is a compressed air tank 20 having a connection at 21 to a compressed air pump 22, this pump 22 having a drive shaft 23 on which is a pulley 24, driven by a belt 25 trained over a pulley on the crankcase. An automatic pressure relief valve 26 can be provided on the top of the tank 20, and a conduit 27 extends from the top of this tank to the port 10 of the cylinder 6.

Numeral 28 denotes a fuel supply line to the port 11 and in this is a supercharging pump 29 including a pulley 30 driven by a belt 31 which is also trained over a pulley on the crankshaft 19.

It can now be seen that when the combustion cycle has taken place in the cylinder 6, the piston 15 is driven downwardly. As the piston begins to uncover the exhaust ports 9, the pressure in the cylinder is relieved somewhat and when it falls below the pressure of the compressed air supplied from the tank 20, the valve 12 will open and sweep the cylinder clean of the gases of combustion. This scavenging operation will take place throughout the movement of uncovering and covering the ports 9 by the piston 15.

When the piston 15 moves to the position shown in Figure 4, the piston will start to build up pressure in the cylinder, closing the valve 12. The supercharged fuel intake valve 13 will now open and admit supercharged fuel to the cylinder 6, the piston 15 at the same time serving to further compress this fuel and as the piston reaches the upper portion of the cylinder, the pressure of the fuel in the cylinder exceeds the pressure of the supercharged fuel and the valve 13 of its spring tendency will close, as shown in Figure 5.

While the foregoing specification sets forth the invention in specific terms, it is to be understood that numerous changes in the shape, size and materials may be resorted to without departing from the spirit and scope of the invention as claimed hereinafter.

Having described the invention, what is claimed as new is:

1. In an internal combustion engine a water-jacketed cylinder including a compressed air inlet port and a supercharged fuel port, both at one end of the cylinder and a skirt at the other end of the cylinder, a spring actuated valve for each of the ports, a piston operative in said cylinder, a series of circumferentially spaced exhaust ports at the juncture of the cylinder and the skirt adapted to be uncovered at the completion of the power stroke of the piston; a crank shaft, crank and link connection between the pis-

ton and the crankshaft; a fuel supply line for said fuel port; a supercharging pump in said fuel supply line; an air tank with a conduit connected with said compressed-air port, and an air compression pump for said air tank, and belt and pulley drives from said crank-shaft to each of said pumps; whereby the pressure of combustion is partly relieved, when the piston has passed said exhaust ports to admit scavenging air to the cylinder, the spring operated valves being synchronized with said piston.

2. In an internal combustion engine a cooling jacketed cylinder including a compressed medium inlet port and a supercharged fuel port, both at one end of the cylinder and a skirt at the other end of the cylinder, a spring actuated valve for each of the ports, a piston operative in said cylinder, a series of circumferentially spaced exhaust ports at the juncture of the cylinder and the skirt adapted to be uncovered at the completion of the power stroke of the piston; a crank shaft, crank and link connection between the piston and the crankshaft; a fuel supply line for said fuel port; a supercharging pump in said fuel supply line; a compressed medium tank with a conduit connected with said compressed medium port, and a medium compression pump for said tank, and suitable drives from said crank shaft to each of said pumps; whereby the pressure of combustion is partly relieved, when the piston has passed said exhaust ports to admit scavenging medium to the cylinder, the spring operated valves being synchronized with said piston.

FRED CARTER.