April 3, 1945. E. BLAIR 2,372,706

BLANK FEEDING MECHANISM

Filed Jan. 27, 1943 3 Sheets-Sheet 1

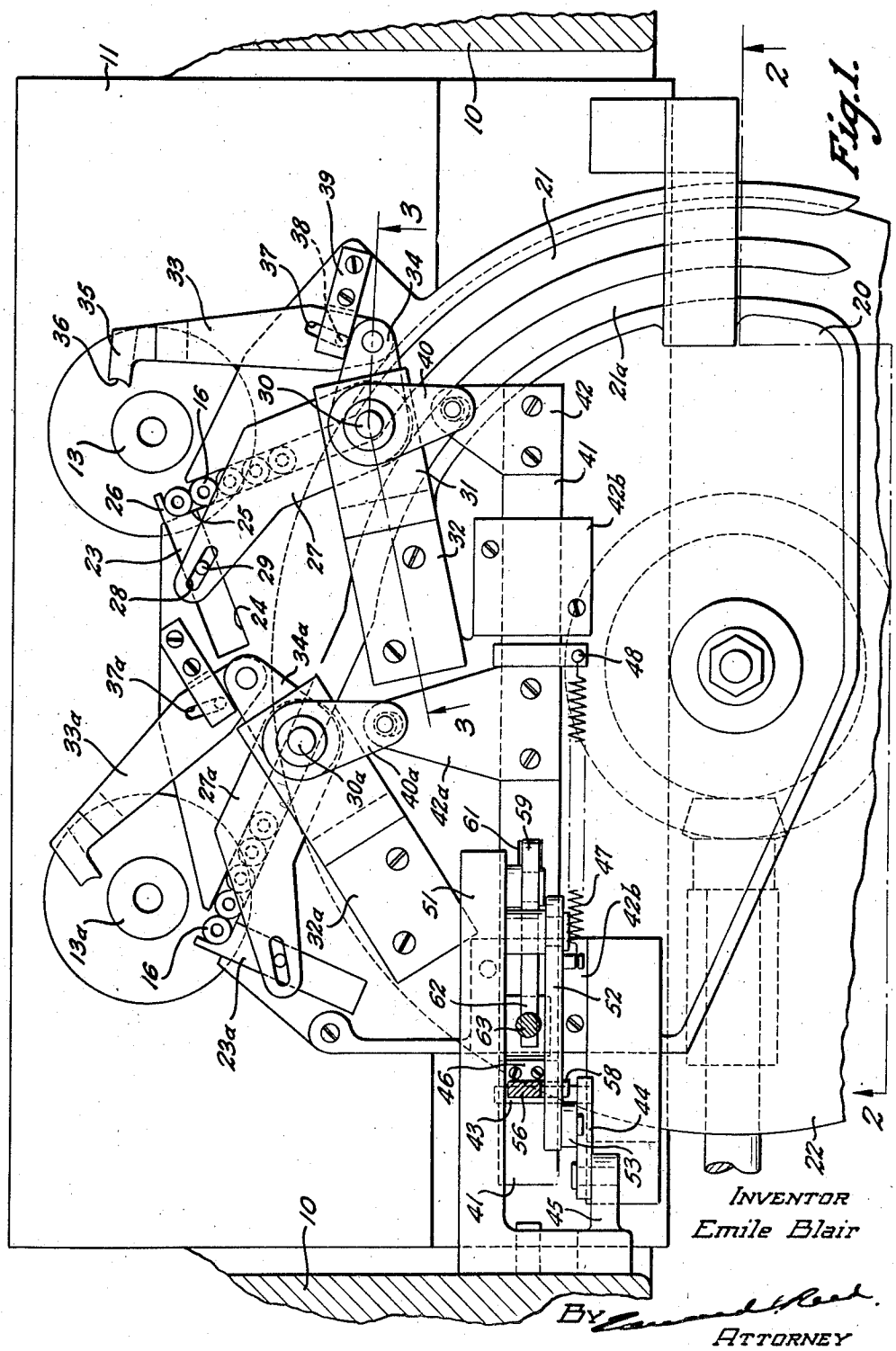

April 3, 1945. E. BLAIR 2,372,706

BLANK FEEDING MECHANISM

Filed Jan. 27, 1943 3 Sheets-Sheet 2

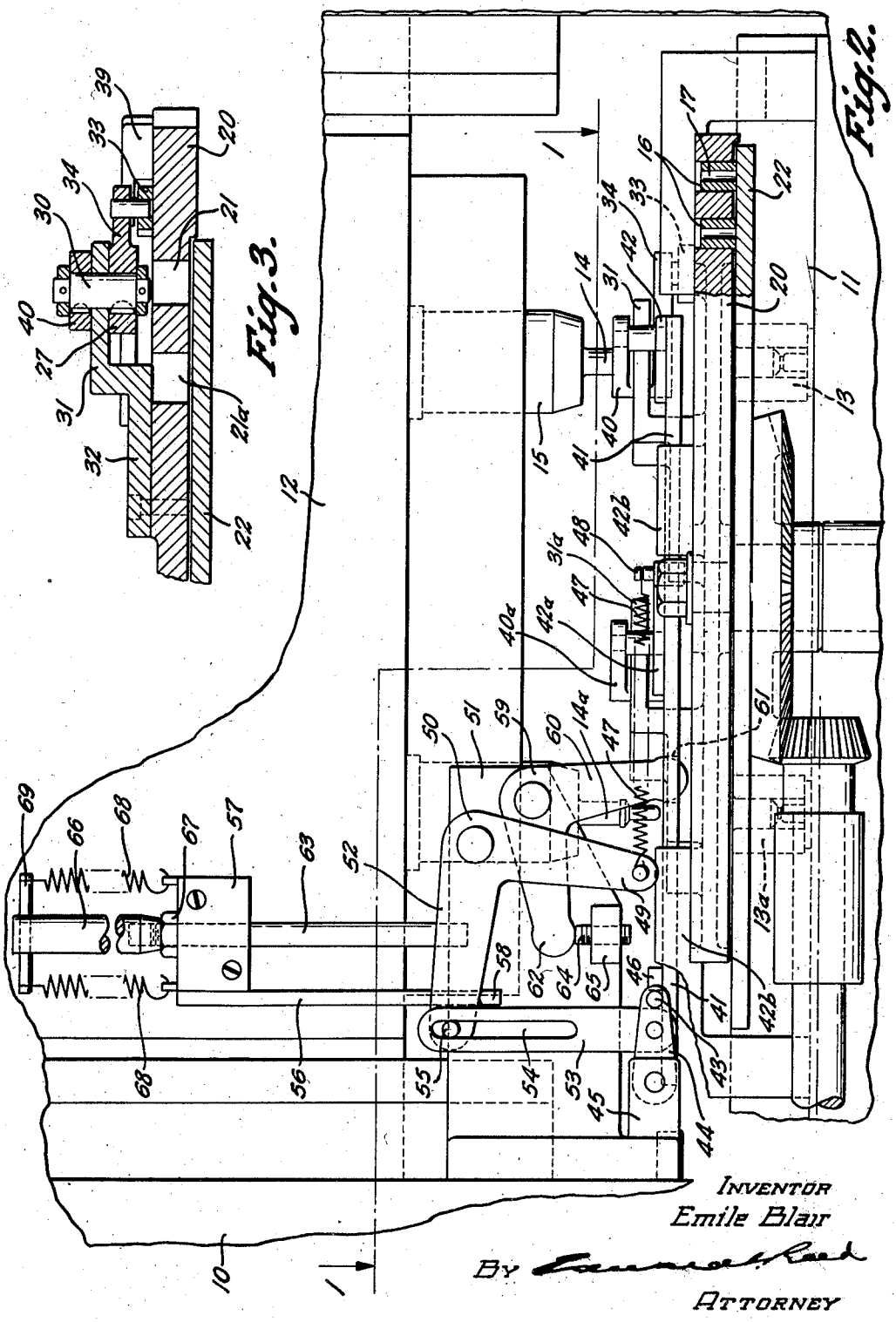

INVENTOR
Emile Blair
BY
ATTORNEY

April 3, 1945. E. BLAIR 2,372,706

BLANK FEEDING MECHANISM

Filed Jan. 27, 1943 3 Sheets-Sheet 3

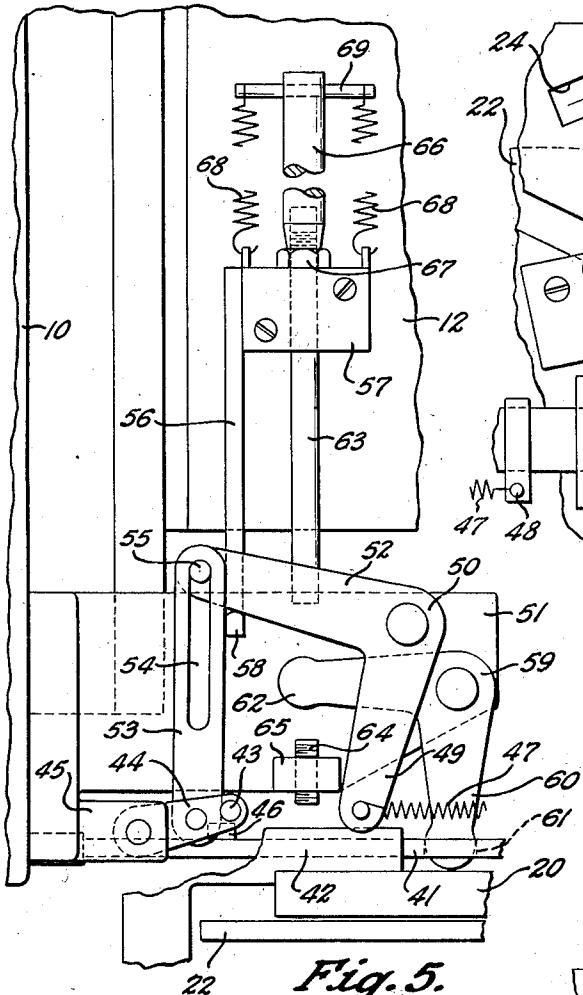

Fig. 5.

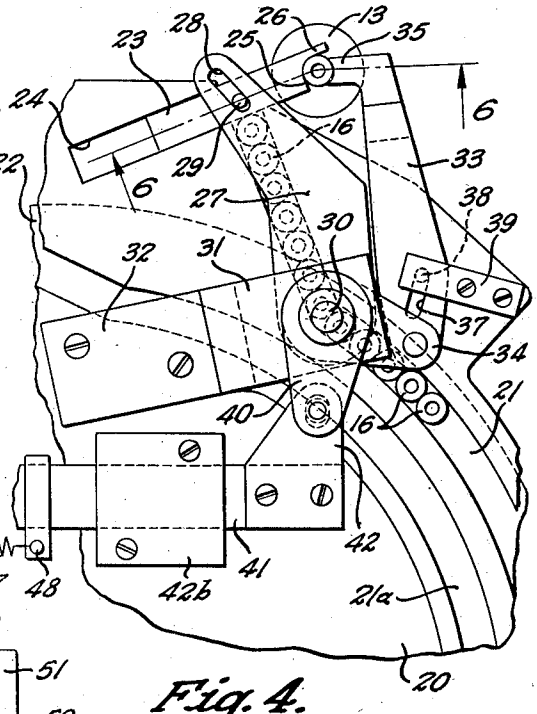

Fig. 4.

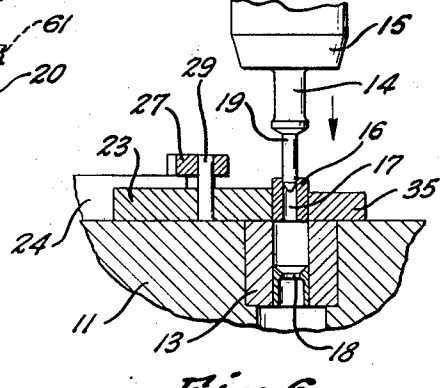

Fig. 6.

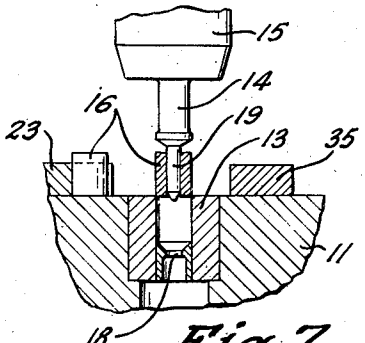

Fig. 7.

INVENTOR
Emile Blair

BY

ATTORNEY

Patented Apr. 3, 1945

2,372,706

UNITED STATES PATENT OFFICE

2,372,706

BLANK FEEDING MECHANISM

Emile Blair, Dayton, Ohio, assignor to Standard Aircraft Products, Inc., Dayton, Ohio, a corporation of Delaware

Application January 27, 1943, Serial No. 473,686

16 Claims. (Cl. 207—2)

This invention relates to a blank feeding mechanism and is designed more particularly for delivering blanks to an extruding press.

One object of the invention is to provide a mechanism for feeding blanks to the die of the press in accurately timed relation to the movements of the punch and for accurately positioning each such blank with relation to the die.

A further object of the invention is to provide such a mechanism which will operate to accurately position a blank with relation to the die upon each outward movement of the punch and to quickly and positively retract the positioning means at a predetermined point in the inward movement of the punch.

A further object of the invention is to provide such a mechanism with which the blank after being positioned with relation to the die will be held against lateral displacement throughout the inward movement of the punch.

A further object of the invention is to provide such a mechanism in which the means for actuating the blank positioning device will be possitively controlled by the ram of the press.

A further object of the invention is to provide such a mechanism adapted to be installed on a high speed press and operated in accordance with the speed of the press to accurately position a blank with relation to the die upon each reciprocation of the ram of the press.

A further object of the invention is to provide such a mechanism which will be simple in its construction and operation and can be produced at a relatively low cost.

Other objects of the invention may appear as the mechanism is described in detail.

In the accompanying drawings Fig. 1 is a plan view of a feeding mechanism embodying my invention, partly broken away, and shown in connection with portions of a press; Fig. 2 is a front elevation of the mechanism shown in Fig. 1, partly broken away; Fig. 3 is a sectional detail view taken on the line 3—3 of Fig. 1; Fig. 4 is a plan view of one of the blank positioning devices showing the members thereof in positioning contact with the blank; Fig. 5 is a front elevation of a portion of the controlling mechanism showing the same in a position different from that shown in Fig. 2; Fig. 6 is a sectional view taken on the line 6—6 of Fig. 4; and Fig. 7 is a similar view showing the parts in different positions.

In these drawings I have illustrated one embodiment of the invention and have shown the same in connection with a tube extruding press of the vertically reciprocating type but it is to be understood that the mechanism may take various forms and may be used with presses of various kinds.

In these drawings I have shown only those portions of the press which are directly associated with the feeding mechanism. Portions of the side frames are shown at 10, the bed plate at 11 and the ram at 12. The means for operating the ram is not shown but may comprise the usual, or any suitable, mechanism for reciprocating the ram at the desired speed. The die 13 is mounted in the bed plate 11 and the punch 14 is carried by a supporting member 15 which is rigidly mounted on the ram 12. The die and its punch are of a character adapted to extrude metal blanks in the form of tubes and the die is adapted to receive a blank 16, which is here shown in the form of a cylindrical slug of copper, or similar material, having an axial aperture 17 extending through the same (see Figs. 6 and 7). The blank fits so tightly in the die that it will not, ordinarily, be moved by gravity into the die but will be supported above the die cavity until it is engaged by the punch and forced into the cavity. The die is provided at its lower end with an annular shoulder 18 which defines the outer boundary of the discharge opening through which the metal is extruded. The punch 14 comprises a part, or head, adapted to engage the blank, force the same into the die and there subject it to pressure and impact to heat the metal and cause it to flow through the discharge opening, and a small diameter portion or pilot 19 projecting from the head is adapted to extend through the aperture in the blank and into the discharge opening and thus convert the latter into an annular orifice through which the metal is extruded in the form of a tube. The punch does not extrude all the metal of the blank but there is left in the bottom of the die a residue, or scrap ring (not shown), which remains attached to the extruded tube, and in the operation of the present press the succeeding blank is inserted in the die on top of the scrap ring of the preceding blank and the latter is extruded in advance of the said succeeding blank, in accordance with the method set forth in my application for patent, Serial No. 438,764, filed April 13, 1942, now Patent No. 2,363,635, issued November 28, 1944. The press may be provided with one or more dies and punches and, in the present instance, a second die and punch are shown at 13a and 14a. Presses of this kind operate at a very high speed, the ram of the press here illustrated being capable of making one hundred and forty complete recip-

rocations per minute and extruding a tube from each die upon each downward stroke of the ram. It is desirable that the shank of the punch should be made as short as possible to minimize the danger of breakage and, in the arrangement shown, the lower face of the supporting part 15 of the punch will be very close to or in light contact with the face of the die when the ram is at the lower limit of its movement.

The blanks, or apertured slugs, are fed successively to a position adjacent to but spaced laterally from the die to which the blanks are to be delivered. In the present instance a plate 20 is mounted above the bed plate of the press and provided with curved slots 21 and 21a and beneath this plate there is rotatably mounted a disk 22 on which the blanks 16 are supported and moved by frictional contact with the disk through the slots or guideways 21 and 21a. The feed plate does not extend across the full width of the disk and the upper surface of the disk is partly exposed to permit a quantity of blanks to be deposited thereon in upright positions and then fed in series through respective guideways. When the press is in operation each guideway is usually filled with blanks. The end portions of the guideways are deflected outwardly beyond the periphery of the disk to points on the bed plate 11 adjacent the respective dies and means are provided for interrupting the movement of each series of blanks when the foremost blank of that series has been projected beyond the end of the guideway, and when the movement of the blanks is so interrupted the disk will continue to rotate in sliding engagement with the lower ends of the blanks which rest thereon.

The present invention resides particularly in mechanism for moving a blank from a position adjacent the die to a position in line with the die cavity, in which position it will be operatively engaged by the punch. This mechanism comprises a blank positioning device adapted to engage the blank while it is supported adjacent the die, move that blank onto the die and accurately position the same with relation thereto, and controlling devices operating in timed relation to so position a blank upon each reciprocation of the ram. The positioning device preferably includes two positioning members, one of which moves the blank onto the die and the other of which engages the blank after it has been moved onto the die and cooperates with the first mentioned positioning member to accurately position the blank and to hold the same against displacement after it has been so positioned. The controlling devices preferably include an actuating member operatively connected with the positioning device and means for operating the actuating member in timed relation to the movements of the ram to cause the positioning device to move a blank onto the die while the punch is spaced from the die and to retract the positioning devices during the operating stroke of the punch.

In the form of the apparatus here illustrated a positioning device is arranged adjacent each die to engage the foremost blank of the corresponding series of blanks and move the same onto the die with which that positioning device is associated and to accurately position the same with relation to the die. As shown in Figs. 1 and 4 the positioning means associated with the die 13 includes a positioning member 23 mounted for movement toward and from the die and is here shown as a flat bar slidably mounted in a guideway 24 in the bed plate 11. The member 23 has at that end thereof adjacent the die a transverse edge 25 which is substantially in line with the adjacent wall of the guideway 21, and has at its outer side a forwardly extending finger 26 which, when the member 23 is in its retracted position, extends across the open end of the guideway 21 and is spaced from the end of that guideway a distance not less than the diameter of a blank, so that when the foremost blank engages the stop finger 26 it will lie entirely beyond the guideway and can be moved transversely thereto toward the die. Preferably the inner edge of the finger 26 is curved and merges into the end edge 25 to form a seat to receive the cylindrical blank. A pivoted arm 27 is connected at its free end with the positioning member 23 to move the latter toward and from the die and, in the present instance, the arm is provided with an elongate slot 28 into which extends a pin 29 rigid with the member 23, thus permitting the member 23 to be moved in a straight line while the arm moves in the arc of a circle. The arm may be pivotally supported in any suitable manner and, in the arrangement shown, it is rigidly secured to a pivot stud 30 which is mounted in a vertically offset portion 31 of a bracket 32 which is rigidly secured to the guide plate 20. When the arm 27 moves clockwise, in Fig. 1, the positioning member 23 will move the outermost blank 16 across the face of the die to the center thereof but in order to insure the accurate positioning of the blank and to hold the same against lateral displacement after it has been positioned I have provided a second positioning member to cooperate with the member 23, the two members being so connected and controlled that they will move in opposite directions in accurately timed relation one to the other. I have here shown this second positioning member in the form of an arm 33 pivotally mounted on the outer end of a crank arm 34 which is rigidly connected with the arm 27 adjacent the pivotal axis of the latter and extends transversely thereto. At its free end the member 33 is provided with a laterally extending part 35 adapted to be moved over the die and having a curved edge 36 to engage the blank. The member 33 must of course be moved in the direction opposite to that in which the arm 27 and positioning member 23 are moved and inasmuch as the crank arm 34 moves in the same direction as the arm 27 and will impart longitudinal movement to the arm 33 I have provided cam means for moving the latter toward or from the die during its longitudinal movement by the crank arm. In the arrangement shown the arm is provided with an inclined slot 37 through which extends a pin 38 mounted in a fixed bracket 39. Thus the rotation of the stud 30 in a clockwise direction will move the positioning member 23 clockwise and the positioning member 33 counterclockwise and will cause the positioning member 23 to move the foremost blank 16 to the center of the die where it will be engaged by the positioning member 33 and accurately positioned with relation to the die, and will be held in that accurately positioned relation to the die so long as the positioning members remain in engagement therewith. The rotation of the stud 30 in a counterclockwise direction will simultaneously retract both positioning members and withdraw the blank engaging portions thereof from the die and out of the path of the punch. These movements may be imparted to the arms in any suitable manner and, as here shown, the stud 30 has secured thereto a second crank arm 40 by means

of which it is connected with an actuating device. In the present instance the actuating device is in the form of a longitudinally movable bar **41** and the crank arm **40** has a pin and slot connection with a bracket **42** rigidly secured to the actuating bar. While I have shown the several arms rigidly secured to a rotatable stud **30** it will be obvious that the several arms may be rigidly connected one with the other and rotatably mounted as a unit on a fixed stud.

The positioning device associated with the second die, **13***a*, is identical with the positioning device above described in connection with the die **13** and it comprises a positioning member **23***a* actuated by an arm **27***a* mounted on a pivot stud **30***a*, and a second positioning member **33***a* pivotally mounted on a crank arm **34***a* and moved about its pivotal axis by a cam surface **37***a*. A crank arm **40***a* secured to the stud **30***a* is connected by a pin and slot connection with the bracket **42***a* on an actuating bar **41**. Thus the two positioning devices are actuated simultaneously by the same actuating device and in the same timed relation to the movements of the punches.

In many prior tube extruding presses the punch was laterally offset from the die during the down stroke of the ram and the pilot was caused to enter the aperture in a blank and to frictionally engage the wall of the aperture to enable the blank to be supported on the punch. The punch was then moved into line with the die and upon the next down stroke of the ram the punch inserted the blank in the die and extruded the same. This not only required two reciprocations of the ram to extrude a single tube but also required that the aperture in the blank should be of an exact size to enable the pilot to properly engage the blank without distorting the same. This made the production of the blank a precision operation and, in addition, the tight fit of the pilot in the blank often produced objectionable results in the extruding operation. With the present mechanism a tube is extruded from the die upon each reciprocation of the ram and it is unnecessary that the pilot should fit tightly in the blank. Thus the production of the blank is no longer a precision operation as it is only necessary that the aperture shall be of such a size that the pilot upon entering the same will retain the blank in line with the die.

The operation of each positioning device must, of course, be so timed that the blank will be moved onto the die while the punch is spaced from the die, and that the positioning device will be retracted before the punch has moved inwardly far enough to engage the same. This timing can be best effected by connecting directly with the ram certain of the devices which control the operation of the actuating device for the positioning members. The press operating at high speed is subject to more or less vibration and it is desirable that the positioned blank be positively held against lateral displacement until it has been engaged by the punch and forced into the die, and the present mechanism is of such a character that the positioning members will be retained in engagement with the blank until the small diameter portion or pilot **19** of the punch has entered the aperture in the blank and will then be moved quickly out of the path of the punch and its supporting member. Preferably after the positioning members have been retracted during the downward movement of the punch and ram they are locked in their retracted positions until the upward movement of the ram causes them to be released and moved in blank positioning directions.

The mechanism for so controlling the operation of the positioning device may take various forms but in the arrangement here shown the actuating device, or bar **41**, is slidably mounted on the guide plate **20** in guideways **42***b*. The bar is moved in one direction by spring means, the operation of which is initiated by a part carried by the ram, and is moved in the other direction by a device which is positively actuated by a part carried by the ram. As shown in Figs. 1 and 2, the actuating bar is in its retracted position with the positioning members in their retracted, or inoperative, positions and is locked in that position by a locking pin **43** carried by a lock arm **44** pivotally mounted on a fixed bracket **45**, which pin is in the path of a stop, such as a block **46** rigidly secured to the actuating bar. In the preferred construction the actuating bar is moved in blank positioning direction by the spring means which is here shown as a tension spring **47** secured at one end to a stud **48** fixed to the slide bar **41** and connected at its other end with the vertical arm **49** of a bell crank lever **50** which is pivotally mounted on a bracket **51** secured to the frame member **10**. The horizontal arm **52** of the bell crank **50** has lost motion connection with the device for locking the actuating bar **41** in its retracted position, and in the arrangement shown a link **53** is pivotally connected with the pivoted arm **44** which carries the locking pin **43**, extends upwardly therefrom and is provided with a longitudinal slot **54** in which travels a pin **55** rigidly secured to the arm **52** of the bell crank. A rod **56** carried by the ram, and here shown as rigidly secured to a bracket **57** which in turn is rigidly secured to the ram, has at its lower end a lateral projection **58** which extends beneath the horizontal arm **52** of the bell crank. When the ram is at the lower limit of its operative stroke the rod **56** will be in its lowermost position and the pin **55** will be in the lower portion of the slot **54**, and upon the reverse or upward movement of the ram the projection **58** engages the lower edge of the arm **52** and moves the bell crank clockwise, in Fig. 2, thereby stretching the spring **47** and placing the same under tension, as shown in Fig. 1. During the initial movement of the bell crank by the rod the pin **55** moves freely through the slot **54** without imparting longitudinal movement to the link **53**, but just before the ram reaches the outer limit of its movement, as shown in Fig. 2, the pin will engage the upper end wall of the slot and the slight further outward movement of the ram and bell crank arm will move the locking pin out of the path of the stop **46** and thereby release the actuating bar, and the spring **47** will snap the bar quickly to the left, in Fig. 1, to cause the positioning members to position a blank on the die. As the ram begins to move downwardly the projection **58** on the rod **56**, moving with the ram, will permit the bell crank to be moved counterclockwise by the spring **47** but the spring will always have sufficient tension to hold the actuating bar against movement in a reverse direction and to thus hold the positioning members in engagement with the positioned blank.

The actuating bar is moved in the other or retracting direction by a bell crank **59**, the vertical arm **60** of which extends into an opening **61** in the actuating bar and is rounded to permit it to work freely in that opening without lost mo-

tion. The horizontal arm 62 of the bell crank 59 extends into the path of a rod or plunger 63 carried by the ram and upon the downward movement of the ram this rod acts upon the bell crank to move the same in a counterclockwise direction and thus move the actuating bar in the retracting direction. The plunger 63 is so positioned with relation to the ram that it will engage the arm 62 of the bell crank at a predetermined point at which it is desired to retract the positioning members, which, in the present instance, is that point at which the pilot 19 of the punch enters the aperture in the die. The contact of the plunger with the arm of the bell crank causes the actuating device, and therefore the positioning members, to be operated at the same speed at which the ram is moving, thereby enabling them to be withdrawn from the path of the punch while the punch is moving from the position shown in Fig. 6 to the position shown in Fig. 7. A stop is provided to limit the counterclockwise movement of the bell crank 59 and is adjustable to permit that limit to be varied. As here shown, the stop is in the form of a screw 64 threaded into a lug 65 on the bracket 51. The plunger 63 is yieldably supported on the ram to permit the latter to move with relation thereto after the plunger has engaged the arm 62 of the bell crank and while the ram completes its downward movement. In the arrangement shown the plunger is slidably mounted in the bracket 57 and has above the bracket an enlarged upper portion 66 into which the upper end of the lower portion 63 of the plunger is threaded, a nut 67 being provided to lock the parts in their adjusted positions. The lower surface of the nut 67 forms a shoulder to engage the bracket 57 and limit the downward movement of the plunger with relation thereto and this shoulder is held normally in contact with the bracket by springs 68 which are connected at their lower ends with the bracket 57 and at their upper ends with a cross arm 69 carried by the upper portion 66 of the plunger. The springs are of such strength that they will not yield during the movement of the bell crank 59 by the plunger but will yield only after the movement of the bell crank has been interrupted by the stop.

It will be apparent from the foregoing description that I have provided a mechanism which operates at the speed of the press to feed a blank to and position the same on each die upon each reciprocation of the ram, the positioning members holding the blank against displacement until the punch reaches a predetermined point in its movement toward the die and then being quickly and positively withdrawn; and that the mechanism, while relatively simple in construction and operation, is of a strong durable character and capable of operating at extremely high speeds in accurately timed relation to the movements of the ram.

While I have shown and described one embodiment of my invention I wish it to be understood that I do not desire to be limited to the details thereof as various modifications may occur to a person skilled in the art.

Having now fully described my invention, what I claim as new and desire to secure by Letters Patent is:

1. In a mechanism for feeding blanks to a press of the type including a die, a punch, and means for moving said punch into and out of said die, a device having a part movable across the face of said die to position the blank with relation thereto, spring means for moving said device in blank positioning direction, releasable means for preventing the movement of said device by said spring means, means operating in timed relation to the movements of said punch to release said device for movement by said spring means while said punch is spaced from said die, and other means operating in timed relation to the movements of said punch to retract said device as said punch approaches said die.

2. In a mechanism for feeding blanks to a press of the type including a die, a punch, and means for moving said punch into and out of said die, a device having a part movable across the face of said die to position the blank with relation thereto, releasable means for preventing the movement of said device in blank positioning direction, spring means to move said device in blank positioning direction, means operating in timed relation to the movements of said punch to place said spring means under tension and to release said device for operation by said spring means as said punch approaches the outer limit of its movement, and other means operating in timed relation to the movements of said punch to retract said device as said punch approaches said die and to render said movement preventing means operative.

3. In a mechanism for feeding blanks to a press of the type comprising a ram, a die, and a punch carried by said ram and movable thereby into and out of said die, a device for moving a blank to a position to be operatively engaged by said punch, an actuating device movable in one direction to cause said positioning device to so position the blank and movable in another direction to retract said positioning device, releasable means to hold said actuating device against movement in the first mentioned direction, means including a spring to move said actuating device in said first mentioned direction, means controlled by said ram to release said actuating device for movement by said spring while said ram is near the outer limit of its movement, and means controlled by said ram to move said actuating device in the last mentioned direction at a predetermined point in the movement of said ram.

4. In a mechanism for feeding blanks to a press of the type comprising a ram, a die, and a punch carried by said ram and movable thereby into and out of said die, a device for moving a blank to a position to be operatively engaged by said punch, an actuating device movable in one direction to cause said positioning device to so position the blank and movable in another direction to retract said positioning device, releasable means to hold said actuating device against movement in the first mentioned direction, means including a spring to move said actuating device in said first mentioned direction, means controlled by said ram to place said spring under tension and to release said actuating device for movement by said spring when said ram is near the outer limit of its movement, and means controlled by said ram to move said actuating device in the last mentioned direction at a predetermined point in the inward movement of said ram.

5. In a mechanism for feeding blanks to a press of the type comprising a ram, a die, and a punch carried by said ram and movable thereby into and out of said die, a device for moving a blank to a position to be operatively engaged by said punch, an actuating device movable in

one direction to cause said positioning device to so position the blank and movable in another direction to retract said positioning device, releasable means to hold said actuating device against movement in the first mentioned direction, means including a spring to move said actuating device in said first mentioned direction, means controlled by said ram to release said actuating device for movement by said spring while said ram is near the outer limit of its movement, a member movably mounted on a fixed support and operatively connected with said actuating device, and a part connected with said ram to engage said movable member and move said actuating device in the last mentioned direction when said ram arrives at a predetermined point in its inward movement.

6. In a mechanism for feeding blanks to a press of the type comprising a ram, a die, and a punch carried by said ram and movable thereby into and out of said die, a device for moving a blank to a position to be operatively engaged by said punch, an actuating device movable in one direction to cause said positioning device to so position the blank and movable in another direction to retract said positioning device, releasable means to prevent the movement of said actuating device in the first mentioned direction, spring means for moving said actuating device in said first mentioned direction, a lever connected with said spring means, means connected with said ram to move said lever in a direction to place said spring means under tension during the outward movement of said ram and to release said actuating member for movement by said spring means when said ram closely approaches the limit of its outward movement, and means controlled by said ram to move said actuating device in the last mentioned direction at a predetermined point in the inward movement of said ram.

7. In a mechanism for feeding blanks to a press of the type comprising a ram, a die, and a punch carried by said ram and movable thereby into and out of said die, a device for moving a blank to a position to be operatively engaged by said punch, an actuating device movable in one direction to cause said positioning device to so position the blank and movable in another direction to retract said positioning device, releasable means to prevent the movement of said actuating device in the first mentioned direction, spring means for moving said actuating device in said first mentioned direction, a lever connected with said spring means, means connected with said ram to move said lever in a direction to place said spring means under tension during the outward movement of said ram and to release said actuating device for movement by said spring means when said ram closely approaches the limit of its outward movement, a second lever operatively connected with said actuating device, and a part connected with said ram and arranged to engage said second lever and move said actuating device in the last mentioned direction during the inward movement of said ram.

8. In a mechanism for feeding blanks to a press of the type comprising a ram, a die, and a punch carried by said ram and movable thereby into and out of said die, a device for moving a blank to a position to be operatively engaged by said punch, an actuating device movable in one direction to cause said positioning device to so position the blank and movable in another direction to retract said positioning device, a locking device movable into and out of engagement with a part carried by said actuating device to hold the latter against movement in the first mentioned direction, a member pivotally mounted on a fixed support, a spring connected with said pivotal member and said actuating device to move the latter in the first mentioned direction, a lost motion connection between said pivotal member and said locking device, means connected with said ram and acting on said pivotal member during the outward movement of said ram to place said spring under tension and to thereafter move said locking device out of engagement with said part of said actuating device to release the latter for movement by said spring, and means controlled by said ram for moving said actuating device in the last mentioned direction during the inward movement of said ram and causing said part thereof to be engaged by said locking device.

9. In a mechanism for feeding blanks to a press of the type comprising a ram, a die, and a punch carried by said ram and movable thereby into and out of said die, a device for moving a blank to a position to be operatively engaged by said punch, an actuating device movable in one direction to cause said positioning device to so position the blank and movable in another direction to retract said positioning device, a lever operatively connected with said actuating device, a part carried by said ram to actuate said lever during the inward movement of said ram to move said actuating device in the last mentioned direction, said part being yieldably connected with said ram to permit the latter to move with relation to said part after said lever has reached the limit of its movement, a locking device to prevent the movement of said actuating device in the first mentioned direction, a second lever having a lost motion connection with said locking device, a spring connecting said second lever with said actuating device, and a part connected with said ram to actuate said second lever during the outward movement of said ram to place said spring under tension and to render said locking device inoperative and thereby release said actuating device for movement in the first mentioned direction by said spring.

10. In a mechanism for feeding blanks to a press of the type comprising a ram, a die, and a punch carried by said ram and movable thereby into and out of said die, a device for moving a blank to a position to be operatively engaged by said punch, an actuating device movable in one direction to cause said positioning device to so position the blank and movable in another direction to retract said positioning device, a bell crank lever mounted on a fixed support and having a vertical arm operatively connected with said actuating device, a rod carried by said ram and arranged to engage the horizontal arm of said bell crank during the downward movement of said ram and thereby move said actuating device in the last mentioned direction, a stop to limit the movement of said lever by said rod, said rod being yieldably connected with said ram to permit the latter to move with relation thereto when said bell crank has engaged said stop, a second bell crank lever movably mounted on a fixed support, a spring connecting the vertical arm of said bell crank with said actuating device to move the latter in the first mentioned direction, a locking device to prevent the movement of said actuating device in said first mentioned direction, a member con-

nected with said locking device and having lost motion connection with the horizontal arm of said bell crank, and a part rigidly connected with said ram and engaging the lower side of said horizontal arm of said second bell crank to move said arm upwardly during the upward movement of said ram to place said spring under tension and to thereafter move said locking device to an inoperative position and to release said actuating device for movement by said spring.

11. In a mechanism for feeding blanks to a press of the type including a die, a punch cooperating with said die, and means for actuating said punch, a blank positioning device including a pivoted arm at one side of said die, a part connected with said arm for movement thereby toward and from said die and having a blank engaging part, a second pivoted arm at the other side of said die having a blank engaging part movable toward and from said die, an actuating device for said arms separate from and movable with relation to said punch, and means for operating said actuating device in timed relation to the movements of said punch to move said arms in blank positioning directions and to retract the same.

12. In a mechanism for feeding blanks to a press of the type including a die, a punch cooperating with said die, and means for actuating said punch, a blank positioning device including a pivoted arm at one side of said die, a part connected with said arm for movement thereby toward and from said die and having a blank engaging part, a second pivoted arm at the other side of said die having a blank engaging part movable toward and from said die, an actuating device including a rotatable member connected with both arms and having means to move said arms simultaneously in opposite directions, and means for operating said actuating device in timed relation to the movements of said punch.

13. In a mechanism for feeding blanks to a press of the type including a die, a punch cooperating with said die, and means for actuating said punch, a blank positioning device including a pivoted arm at one side of said die, a member connected with said arm for movement thereby toward and from said die and having a blank engaging part, a crank arm rigidly connected with said arm adjacent the pivotal axis thereof, an arm pivotally mounted on said crank arm, extending on the other side of said die and having a blank engaging part, means connected with the first mentioned arm for moving the same about its pivotal axis, and cam means for moving the last mentioned arm about its pivotal connection with said crank arm as said first mentioned arm moves about its axis.

14. In a mechanism for feeding blanks to a press of the type including a die, a punch cooperating with said die and means for actuating said punch, a blank positioning device including a fixed support, a pivot stud mounted on said support in spaced relation to said die, an arm secured to said pivot stud and extending on one side of said die, a member connected with said arm for movement thereby toward and from said die and having a blank engaging part, a crank arm secured to said pivot stud and extending transversely to the first mentioned arm, an arm pivotally supported on said crank arm, extending on the other side of said die and having a blank engaging part movable toward and from said die, the last mentioned arm also having a cam slot, a stationary member extending into said slot, a second crank arm secured to said pivot stud, an actuating device connected with said second crank arm, and means for operating said actuating device in timed relation to the movements of said punch.

15. In a mechanism for feeding blanks to a press of the type including a die, a punch cooperating with said die, and means for actuating said punch, a blank positioning device including a pivoted arm at one side of said die, a member connected with said arm for movement thereby toward and from said die and having a blank engaging part, a crank arm rigidly connected with said arm adjacent the pivotal axis thereof, an arm pivotally mounted on said crank arm, extending on the other side of said die and having a blank engaging part, cam means for moving the last mentioned arm about its pivotal connection to said crank arm as said first mentioned arm moves about its axis, and means connected with the first mentioned arm and operating in timed relation to the movements of said punch to move both arms in blank positioning direction while said punch is near the outer limit of its movement and for retracting both arms at a predetermined point in the inward movement of said punch.

16. In a mechanism for feeding blanks to a press of the type including a die, a punch cooperating with said die, and means for actuating said punch, a blank positioning device including a pivoted arm at one side of said die, a member connected with said arm for movement thereby toward and from said die and having a blank engaging part, a crank arm rigidly connected with said arm adjacent the pivotal axis thereof, an arm pivotally mounted on said crank arm, extending on the other side of said die and having a blank engaging part, cam means for moving the last mentioned arm about its pivotal connection to said crank arm as said first mentioned arm moves about its axis, and means connected with the first mentioned arm and operating in timed relation to the movements of said punch to move both arms in blank positioning direction while said punch is near the outer limit of its movement, for retaining said arms at the inner limits of their movements in said direction until said punch reaches a predetermined point in its movement and then quickly retracting both arms.

EMILE BLAIR.