Nov. 14, 1944. F. E. CARTER 2,362,466

WALKER AND REJUVENATOR FOR PHYSICALLY DISABLED PERSONS

Filed Sept. 8, 1941 3 Sheets-Sheet 1

Fig. 3

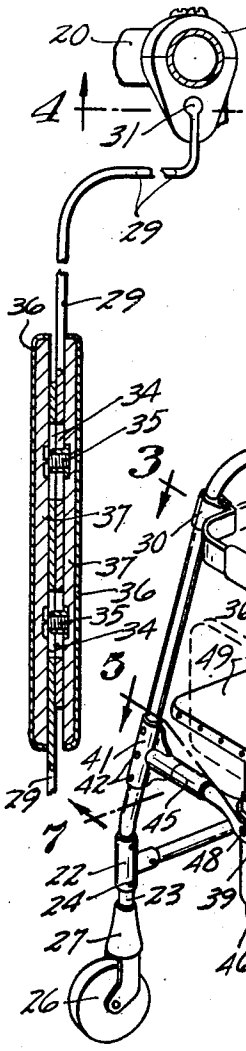

Fig. 1

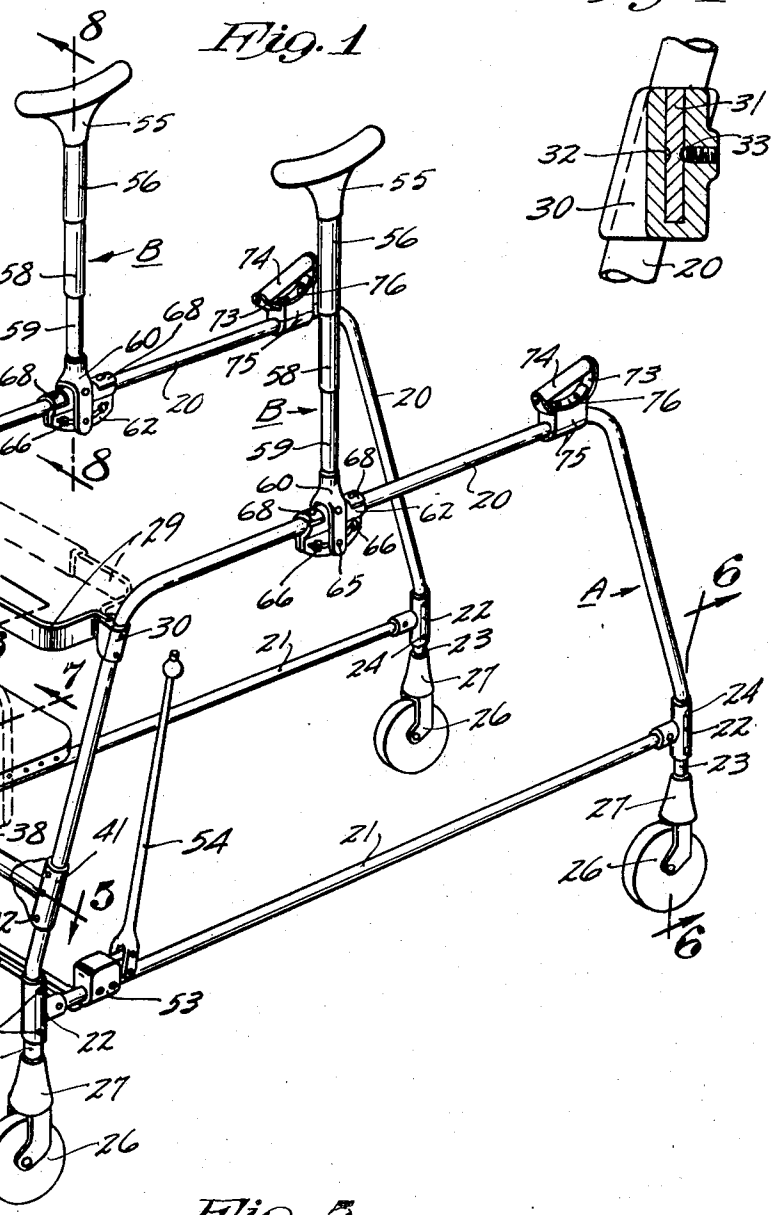

Fig. 4

Fig. 5

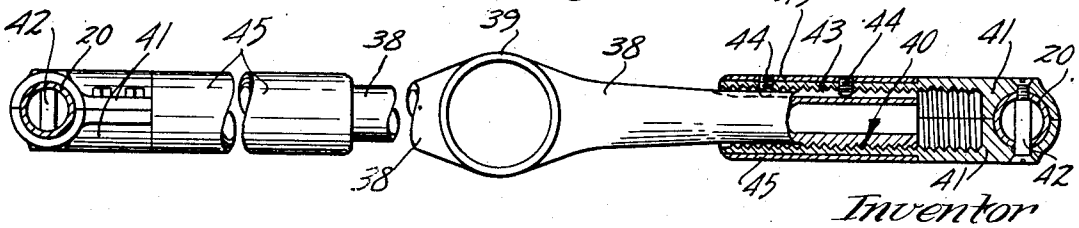

Inventor
Frank E. Carter
By his Attorneys
Merchant & Merchant

Nov. 14, 1944. F. E. CARTER 2,362,466

WALKER AND REJUVENATOR FOR PHYSICALLY DISABLED PERSONS

Filed Sept. 8, 1941 3 Sheets-Sheet 2

Fig. 2

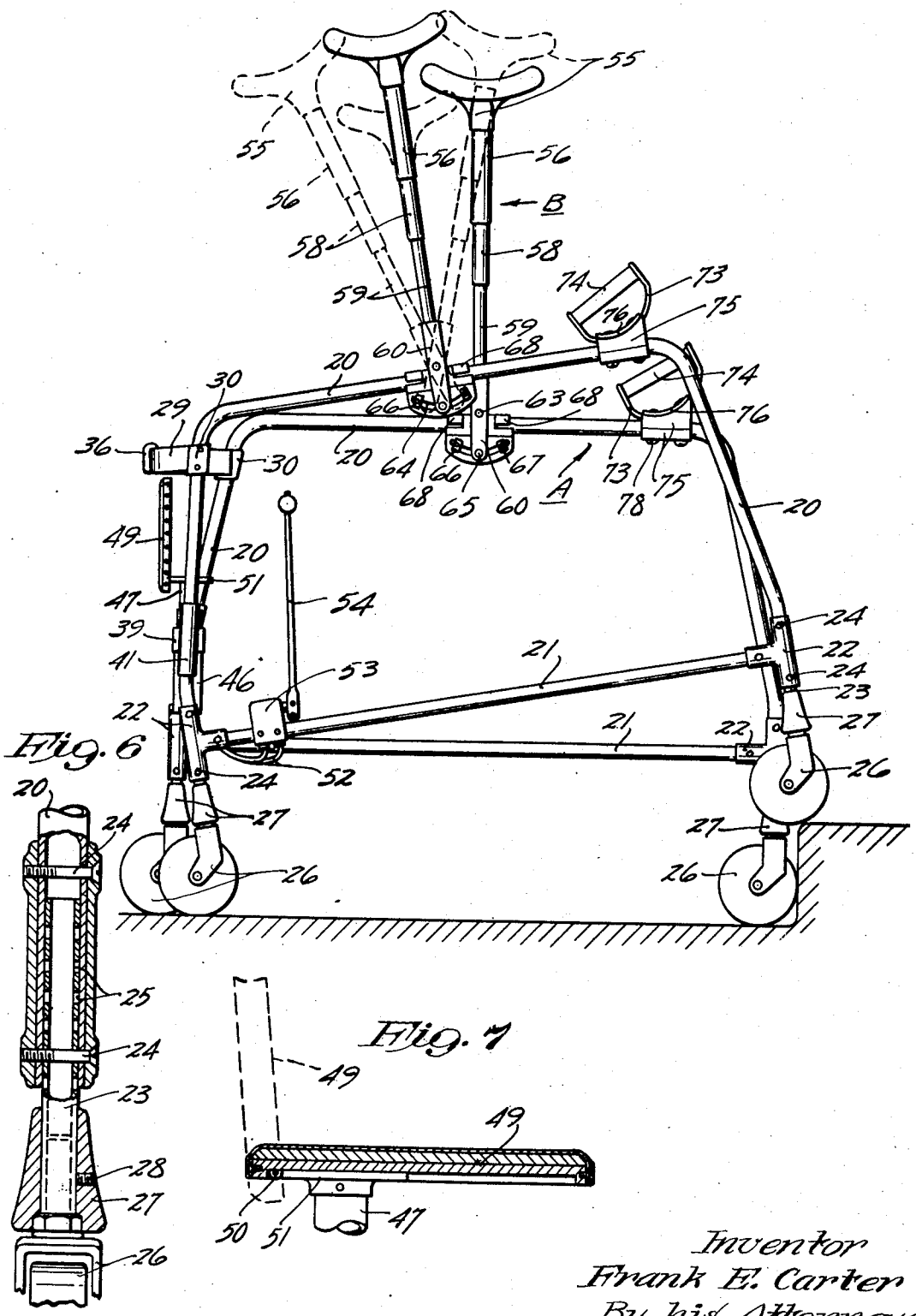

Fig. 6

Fig. 7

Inventor
Frank E. Carter
By his Attorneys
Michael Michael

Nov. 14, 1944. F. E. CARTER 2,362,466

WALKER AND REJUVENATOR FOR PHYSICALLY DISABLED PERSONS

Filed Sept. 8, 1941 3 Sheets-Sheet 3

Fig. 8

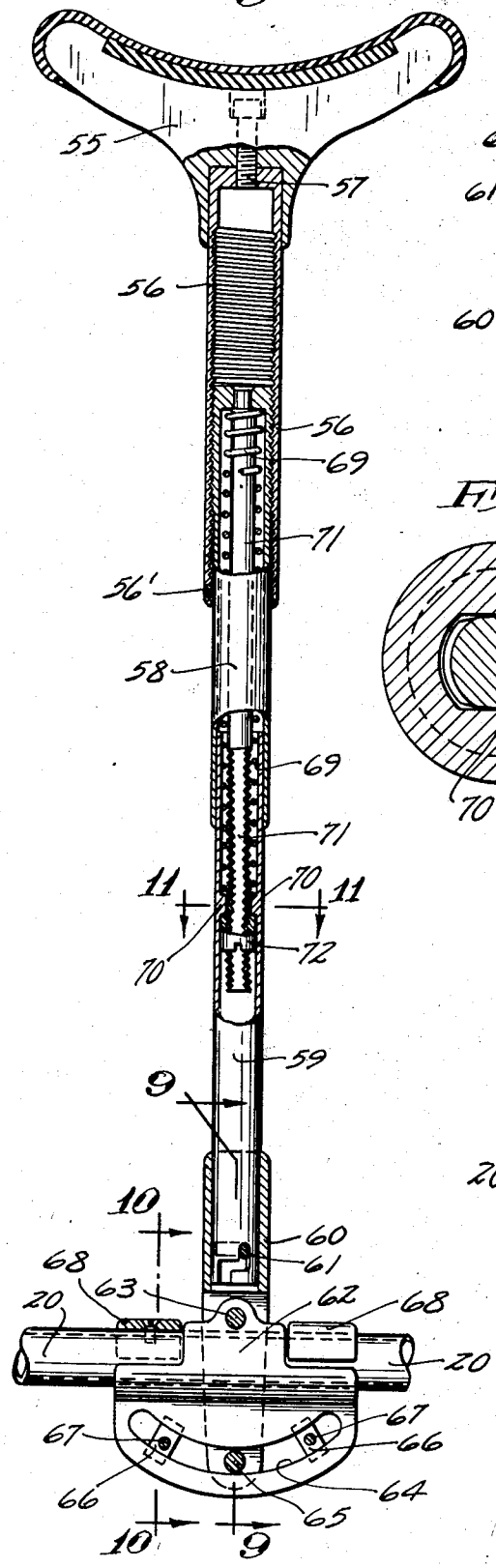

Fig. 9

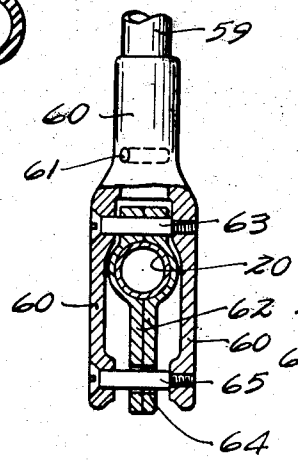

Fig. 10

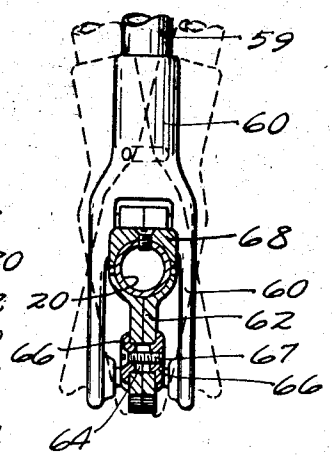

Fig. 11

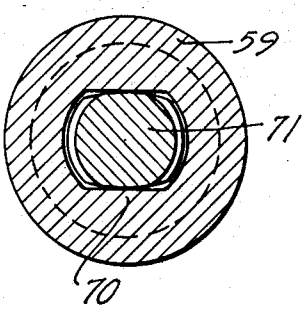

Fig. 12

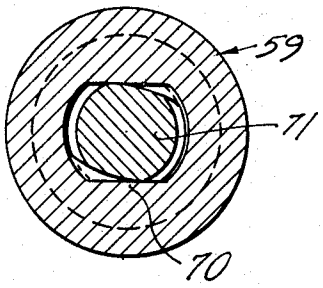

Fig. 13

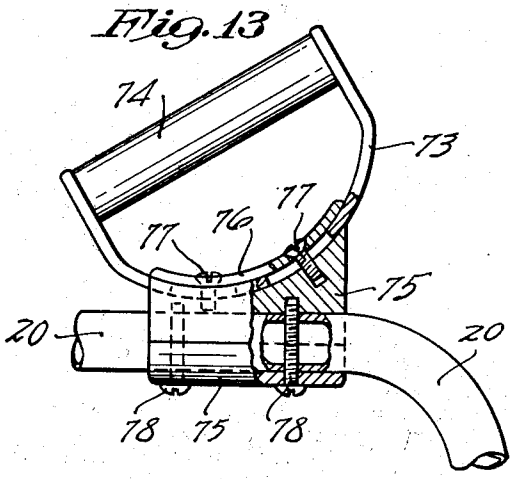

Inventor
Frank E. Carter
By his Attorneys
Merchant & Merchant

Patented Nov. 14, 1944

2,362,466

UNITED STATES PATENT OFFICE

2,362,466

WALKER AND REJUVENATOR FOR PHYSICALLY DISABLED PERSONS

Frank E. Carter, Minneapolis, Minn.

Application September 8, 1941, Serial No. 409,961

24 Claims. (Cl. 155—22)

My invention provides a device which, because of the functions that it performs, may be and herein is designated as a "Walker and rejuvenator for physically disabled persons."

In one sense the invention provides a walking device or perambulator enabling persons, who have lost the phyisical properties for walking, to move about or navigate; and in another sense the device induces a therapeutic or curative action that arrests and generally reestablishes the functions of those organs the normal operations of which are required for walking. By the use of this improved device the normal independent functions required in locomotion may be reestablished.

The device involves interconnected laterally spaced members herein designated as "side frames" that are equipped, in a novel way, with supporting crutches. These crutches perform numerous functions. They are mounted on the respective side frames for independent compound oscillatory movements, and for independent yielding longitudinal or extensible movements. Resilient devices, such as springs, are incorporated in the crutches and are arranged to be adjusted as to tension so as to carry more or less of the load of the body of the user of the device. Also, the crutches are made extensible to adapt themselves to the height of the user. To complete the universal independent movements of the body-supporting upper portions of the crutches, they are mounted for limited rotary oscillations on the axes of the crutches.

The cross-connected side frames form sort of a chair-like structure within which the body of the user is located; and this so-called chair is preferably equipped with a seat that may be readily moved to and from operative position.

The side frames of the chair-like frame or enclosing structure are connected by cross ties or means that holds them substantially parallel but permits the one side frame to be tilted or raised at its front portion so as to adapt the device for readily climbing from a road surface over a curb and onto a raised sidewalk.

All of the above briefly indicated features and functions of the device and others will, however, be more readily understood and more fully appreciated after first having described a commercial embodiment of the invention illustrated in the accompanying drawings, wherein like characters indicate like parts throughout the several views.

The present application is filed as a continuation-in-part of my prior and now pending application entitled "Invalid's Walker," filed June 24, 1939, under Serial No. 280,931, and embodies certain important improved or additional features as will appear in the description of the present improved device.

Referring to the drawings:

Fig. 1 is a view in perspective showing the improved device;

Fig. 2 is a side elevation of the device;

Fig. 3 is a detail in section taken on the line 3—3 of Fig. 1;

Fig. 4 is a section taken on the line 4—4 of Fig. 3;

Fig. 5 is a view partly in plan and partly in horizontal section taken on the line 5—5 of Fig. 1;

Fig. 6 is a fragmentary section taken on the line 6—6 of Fig. 1;

Fig. 7 is a fragmentary section taken on the line 7—7 of Fig. 1;

Fig. 8 is a view partly in side elevation but chiefly in vertical section taken on the line 8—8 of Fig. 1;

Fig. 9 is a detail taken on the line 9—9 of Fig. 8;

Fig. 10 is a section taken on the line 10—10 of Fig. 8;

Fig. 11 is an enlarged section taken on the on the line 11—11 of Fig. 8;

Fig. 12 is a view corresponding to Fig. 11 but showing a slightly different position of certain of the parts; and

Fig. 13 is a view in side elevation, with some parts in section and some parts broken away, showing one of the handles and its adjustable connection to the side members of the framework herein frequently designated as a chair or chair-like structure.

The complete device, for brevity designated as a "chair," involves three major elements or members, to wit: the chair or framework and two crutches or crutch members. The chair structure is designated as an entirety by the character A and the crutches or crutch members are designated as entireties each by the character B. The chair structure involves laterally spaced side frames preferably each made up of steel tubing and involving a main or upper tube 20 and a lower or tie-bar 21. The lower or tie-bars 21 are rigidly connected to the downturned ends of the bars or members 20 by T-couplings 22. The lower ends of the tube or member 20 extend below the couplings 22 and extension legs 23 are telescoped into the lower ends of said members 20 and indirectly into the couplings

22. These extension legs 23 are made vertically adjustable by a suitable means such as threaded screws 24 that work through the couplings 22 and through verticcally spaced perforations 25 in the said extension legs, see particularly Fig. 6. Caster wheels 26, of well-known or suitable construction, are applied to the lower ends of the extension legs. Conical sleeves 27 are preferably placed on the projecting lower portions of the legs 23 above the castor wheels and are advisably rigidly secured to the said legs by set-screws 28. These conical sleeves 27, as will hereinafter appear, serve to prevent the lower ends of the legs from catching on obstructions such as curbs when the device is moved onto or over the same.

The laterally spaced side frames just described are disconnected or open at the front end of the chair structure but at their rear portions they are connected in a novel way which holds the side frames approximately parallel, but permits lateral adjustments of the side frames and, moreover, permits the two side frames to be given limited independent vertical movements.

This novel connection between the rear portions of the side frames is, in this preferred arrangement, accomplished by adjustable upper and lower cross bars or tie members. The upper cross bore or tie member has sufficient resilience in torque to permit the above noted independent limited vertical or angular movements of the side frames, one in respect to the other; and said tie member, in this preferred structure, includes two resilient steel straps or flat members 29, the outer ends of which are rigidly but preferably detachably connected to coupling hubs 30 rigidly secured on the rear upper portions of the bars or members 20. To make said tie straps 29 readily detachable from hubs 30, they are shown as provided with enlarged heads 31 that fit in "key hole slots" in said hubs 30. As best shown in Fig. 4, the heads 31 are shown as formed with notches or shallow pockets 32 that are normally engaged by spring-pressed balls 33 mounted in the hubs 30. These spring-pressed balls and notches simply hold the straps against accidental displacement and render the straps reversible by rotation, for a purpose which will hereinafter appear.

The ends of the tie straps 29 are overlapped and provided with slots 34 through which nut-equipped screws 35 are passed. These slots and nut-equipped screws rigidly connect the two tie straps 29 but make the same endwise adjustable to vary the spacing between the two side frames. Preferably, a covering member or sheath 36 of leather, metal or any other suitable material, is placed over the lapped ends of the straps 29 to produce a smooth exposed surface and to cover the nut-equipped screws 35. This sheath may be provided with a lining 37, if desired. As will presently appear, the sheath or covering 36 affords a smooth back rest for the person using the device.

The lower tie bar or connection between the rear portions of the two side frames may take various forms but, as shown, and preferred, involves the structure shown in Figs. 1 and 5.

The main or central part of this lower cross tie 38 is a strong tubular metallic member formed at its central portion with an upright sleeve 39. The ends of the cross tie bar or member 38 are externally threaded at 40 and are screw-threaded into the aligned sleeve-like portions of metallic T-couplings 41. These two couplings 41 are preferably longitudinally split or made up of two members with hub-like portions that embrace the downturned rear legs of the side frames and are rigidly secured to said legs by sleeve or nut-equipped screws 42 passed through perforations in the members of said couplings and through holes in the rear legs of the side frames 20.

The threaded ends 40 of the bar 38 are cut, one with right and one with left threads and, of course, the internal threads of the two couplings 41 are likewise the one in right and the other in left threads. The manner in which the framework can be laterally adjusted by the upper tie-bar or member 29 has already been noted and it is now evident that the corresponding lateral adjustment of the lower rear portions of the two side frames may be varied by rotation of the said bar or member 38.

At one end, to wit: as shown at the right hand end, the threaded portion of the bar 38 is formed with a longitudinal slot or key-way 43. One or more set of lock screws 44 are applied through the internally threaded portions of the couplings 41 and engage with the key-way or slot 43. This locking between the main member or bar 38 and the coupling 41, and hence, the side frame, is made only at one side, while the corresponding coupling at the opposite side being free from the key-way and set screws will be free for rotation.

Reinforcing tubes or sleeves 45 are telescoped over the aligned ends of both of the couplings 41 to give added strength to the latter. At the right hand side where the set screws 44 are used, they may be and preferably are screwed through perforations in the said sleeve 45.

For many purposes it is highly desirable that the chair structure be provided with a suitable seat adapted to be moved from an operative position into an inoperative position; and it is important that this seat be made vertically adjustable. This seat and its means for adjustment may take various forms, but preferably a cylinder and piston hydraulic lift, such, for example as used in commercial barber seats, will be employed. In the application of such a device a hydraulic hoist will involve a cylinder 46 and a piston 47. In applying this device the cylinder 46 is passed through the sleeve 39 of the bar 38 and is rigidly secured thereto by suitable means such as set screws 48. As illustrated, the seat 49, which is preferably a leather covered metal plate, is connected by a hinge 50 to the rear portion of a head plate 51 which, in turn, is rigidly secured to the upper end of the piston 47. In Fig. 7, the seat is shown in an operative position by full lines and in an inoperative position by dotted lines. The structure of a hydraulic hoist, such as required for this purpose, is well understood and needs no further explanation, except to state that the cylinder is connected in the well-known way by tubes 52 to a valve structure 53 shown as applied to one of the tie-bars 21 and adapted to be actuated by a control lever 54 which is within easy reach of the operator or user of the device.

The crutches or crutch structures are novel not only in their general features and manner of operation, but also in certain important but minor features. Both crutches are preferably of the same construction, that is, are made in duplicates best shown in detail in Fig. 8; but it will, of course, be understood that the detail construction of these crutches may be very greatly varied. The crutch heads 55, which are leath-

er covered or otherwise padded, are preferably metal structures having hubs that are telescoped over and rigidly secured to the upper ends of sleeves or tubular members 56 by means of screws 57. These sleeves 56 are internally threaded and screwed onto the externally threaded upper portions of tubes 58 which, in turn, are telescoped for sliding movements on the upper ends of lower tubes 59. The tubes 59 are telescoped into the sleeve-like upper portions of forks or bifurcated heads 60. The lower ends of tubes 59 are shown as detachably connected in the sleeves of forks 60 by means of bayonet joints 61. The forks 60 embrace or straddle saddle brackets 62 to which they are connected by pivot pins or bolts 63, as best shown in Figs. 8 and 9. The saddle brackets 62 are pivotally mounted on the intermediate portions of the bars or members 20 and are formed with depending flanges having slots 64 that are concentric to the axes of pivot bolts 63. Stop bolts 65 are passed through the forks of saddle brackets 62 and extend through the slots 64.

Forward and rearward oscillatory movements of the crutches are limited by stop blocks or plates 66 that cross the slots 64 and are adjustably but rigidly clamped to the flanges of said saddle brackets by nut-equipped bolts 67. These nut-equipped bolts and stop blocks perform two functions, to wit: they rigidly clamp the sections of the saddle brackets together, and they limit the aforesaid forward and rearward oscillatory movements of the crutches. These saddle brackets 62 are free for limited transverse oscillatory movements and transverse oscillatory movements of the crutches, but are limited in such transverse oscillatory movements by stop clips or plates 68 shown as rigidly but detachably secured on the tops of the upper frame bars 20. Fig. 10 shows approximately the desired amount of transverse oscillatory movements that are permitted the crutches before such movement is stopped by engagement of the reduced ends of the saddle brackets with the lower edges of the stop plates or blocks 68; and, as indicated, the position of the stops 66 limits the permitted forward and rearward oscillatory movements of the crutches. When properly adjusted, the tubes or sleeves 56 will be rigidly connected to sleeves 58 by suitable means such as set screws 56', as shown in Fig. 8. It will be clear that, by means of the devices just described, the lower ends of the crutches B extending from each side frame are connected to the side frames with freedom for limited angular turning movements forwardly, rearwardly, transversely, and obliquely, with respect to the side frames.

It will now be noted that the crutch members 55, 56, and 58 are connected as composite rigid members which are capable of telescopic vertical movements on the lower tubes or members 59. These telescopic up-and-down movements of the upper portions of the crutches are cushioned by yielding means such as long coiled springs 69 that are placed in the tubes 59 and are seated upon internal flanges 70 formed within the tubes 59, while the upper ends of said springs bear against the closed ends of tubes 58. Axial stems or rods 71 are extended axially through the springs 69 and through the spring-seating flanges 70. At their upper ends these stems 71 are riveted or otherwise very rigidly secured to the closed heads of tubes 58 so that they must move not only vertically but rotatively therewith. The spring-seating flanges 70, see Figs. 11 and 12, are formed with flattened sides and the lower threaded portions of stems or rods 71 are also flattened so that they fit the flattened slots 70 with sufficient clearance to permit the said stems 71, and hence the entire upper crutch structures, to oscillate on the axes of the crutches substantially as shown in the two views, 11 and 12. Of course, the slots 70 clear the threaded segments left on the stems or rods 71 so as to permit axial adjustments of the stems therethrough.

Working as nuts on the threaded lower portions of the stems 71 are nut-acting sleeves 72 that engage with the under surfaces of the internal flanges 70. Nut-acting sleeves 72 are preferably notched so that they may be adjusted by a suitable wrench or tool so as to set the springs 69 under any desired tension. Of course, adjustments of the nut-acting sleeves 72 to vary the tension of the springs will vary the length of the crutches, but this can be offset and the crutches independently given desired adjustments for length by rotating the sleeves or tube sections 56 on the tube 58 when set screws 56' are loosened.

Suitable handles are preferably applied to the forwardly projecting upper portions of the frame bars or members 20; and these handles are preferably made adjustable for angle. The handles shown involve segmental yokes 73 with cross hand grips 74. The yokes 73, as shown, are adjustably secured to anchor blocks 75 by means of segmental clamping plates 76 and screws 77, which latter are passed through said plate and screwed into the said blocks 75. The blocks 75 shown are split or two-part members which are rigidly secured together and on the bars 20 by suitable means such as machine screws 78 applied as shown in Fig. 13. To permit the above noted angular adjustments of the handles, the segments 73 are shown as provided with slots 79 through which the screws 77 are passed.

The manner in which the side frames may be adjusted laterally, so as to vary and properly adjust the chair for width, by endwise adjustments of the upper tie bar, best shown in Fig. 3, and the corresponding endwise adjustment of the lower tie bar, best shown in detail in Fig. 5, has already been described. The manner in which the side frames can be adjusted vertically for height, by endwise adjustment of the leg structure, one of which is best shown in Fig. 6, has also been fully described.

When the chair is used for walking, the seat 49 will, of course, be turned backward into the inoperative position shown in Fig. 2, but when a seat is desired, it may be turned down to the position shown by full lines in Fig. 1.

For climbing a curb or onto an elevated walk, there is, as already stated, sufficient resilience in the tie bar members 28 to permit the vertical angular movement of the one frame in respect to the other, as clearly illustrated in Fig. 2. In thus climbing a step or curve, the chair will be first shifted angularly so that the one front caster wheel will be elevated, and then the chair will be shifted angularly in the opposite direction so as to permit the opposite wheel to be likewise raised onto the elevated walk or curb. It will be remembered that the tie bar 38, is anchored at one end only to one of the side frames for angular movement therewith, and that the other side frame is capable of sufficient independent angular movement to permit the above described action, while the central member 38 is locked to

one of the side frames so as to hold the cylinder 46 and piston 47 in a proper seat-supporting position.

The above described resilience in the upper tie members 29 is due partly to the curved or offset angular portions thereof which give the desired increased resilience.

The various oscillatory movements and adjustments, together with the rotary movements, and the yielding pressure elements, all of which are contained in the said crutches and their supports, has been fully described and may be summed up by the statement that within certain limits the crutches are capable of universal oscillatory movements as well as rotary movements, and yielding pressure movements on their supports are capable of being lengthened or shortened to adapt them to properly support the size of the particular individual. For example, a person supported on the crutches and their supports may move the body forward, rearward, laterally, may rock the body from one side to the other (within limits), and, with the combination of the yielding pressure elements, together with the rotary movements, the said device allows the body to have freedom of natural body rhythm or action as nature provides. In other words, the device does not hold or compel the body to remain in a rigid position, in order to carry the weight of the body, with the major weight of the body supported on the pressure yielding elements of the crutches with their supports. The tension of the springs may be varied to suit the requirements of the particular disabled person. Generally stated, the springs should be so adjusted according to the weight, as well as other requirements of the disabled person, or one who has lost all, or nearly all strength in his spine or legs, to carry his body weight and walk, the springs should be under sufficient tension to carry the entire body weight so it is only necessary for the person to put on slight pressure in the feet to give suffition traction to propel the chair forward.

Since the device can be so adjusted to carry the weight of the body off of the spine or legs, and since the device is constructed properly with reasonable weight and mounted on properly easy rolling casters, it is only necessary for the operator to put slight pressure in the feet to produce sufficient traction to propel the device on reasonably smooth surface. Also, since the device can be so adjusted to carry the weight of the body off of the spine or legs, it is only necessary that the operator put slight pressure on the grips or handles, or forward portion of the chair, merely to keep or hold the body in the proper balance. Naturally, the device will usually be steered largely by lateral pressure or force on the handles, or on the sides of the frames, but usually on the handles.

A badly disabled person sitting on the seat 49 may initially engage and rest on the heads of the crutches and then lean forward until the handles can be gripped.

All of the various described movements and adjustments of the crutches and of the elements thereof are highly important. With the device described embodying the said movements and adjustments, a person seated on the seat and preparing to navigate with the device first reaches over and places one of the crutches under one arm and throws a part of the weight of the body on that crutch; then reaches over and places the opposite crutch under the other arm and compresses the same throwing further weight on that crutch; and then with a part of the weight of the body supported on the two crutches, he reaches over and grasps the two hand grips and, by a slight forward pull, brings the body into an upright position. In performing these operations the crutches will be moved forward, rearward, transversely and obliquely, and the twisting movement of the body on the crutch heads will slightly rotate the same on the axis of the crutches. These compound crutch movements may hereinafter be described as universal movements.

In using the device to climb over a curb or climb onto an elevated walk, the body will be thrown or shifted considerably onto the crutch opposite the side frame that is to be raised, thereby making the lifting of the latter an easy matter. In performing these operations all of the described movements of the crutches and the elements thereof co-operate to make the operations a comparatively easy matter.

By reference particularly to the dotted lines in Fig. 1, it will be noted that the upper cross tie, which has the additional function of a back rest when the seat is adjusted, as shown by full lines in Fig. 1, is capable of being removed and replaced in reverse position so that it will then afford a back rest for a person seated on the seat 49 facing rearward or with the feet rearward of the lower cross tie. A person who has sufficient leg strength to stand for a few seconds, either alone or by slight assistance, could be placed on the seat 49 under the adjustment just stated and placed within easy reach of a table, for example. It will be noted that the tubes 52 that lead to and from the hydraulic seat adjustor may be made flexible by means such as the well-known spirally coiled tube structures, so that they will not interfere with the lateral adjustments of the side frames.

While I have, in accordance with the statutes, clearly disclosed an operative device, at present believed to be the preferred embodiment of the invention, nevertheless, various alterations in details of construction and arrangement of parts may be made within the scope of the claims hereof.

What I claim is:

1. In a crutch-equipped walker, the combination with a portable frame structure comprising interconnected forwardly and rearwardly extending side frames spaced to receive an operator therebetween, of a pair of crutches mounted one on each of said side frames, devices anchoring the crutches to their respective side frames with freedom for limited angular turning movements about the anchoring devices in directions forwardly and rearwardly with respect to the side frames, said crutches being axially extendable and contractable and involving elastic elements under yielding pressure to extend the same, said frame structure involving hand grip portions located forwardly of the crutches, whereby the upper ends of the crutches will partake of compound axial and forward and rearward angular turning movements to permit freedom of body action of an operator supported by the crutches and propelling the walker with his feet.

2. The structure defined in claim 1 in which the extendable and contractable crutches comprise telescopically-engaged upper and lower sections, and in which the elastic elements thereof are internally-contained coil springs.

3. In a device of the kind described, interconnected portable side frames, a pair of crutches

mounted one on each of said side frames for forward and rearward swinging movements with respect to the side frames, said crutches including upper and lower end portions connected for relative rotation on the longitudinal axes of said crutches, and means for limiting relative rotary movements of the upper and lower crutch portions.

4. In a crutch-equipped walker, the combination with a portable frame structure comprising interconnected forwardly and rearwardly extended side frames spaced to receive an operator therebetween, of a pair of crutches mounted one on each of said side frames, devices anchoring the crutches to their respective side frames with freedom for universal forward, rearward, transverse, and oblique angular turning movements about said anchoring device, said frame structure further involving hand grip portions located forwardly of the crutch anchoring devices and below the upper ends of the crutches.

5. In a crutch-equipped walker, the combination with a portable frame structure comprising interconnected forwardly and rearwardly extended side frames spaced to receive an operator therebetween, of a pair of crutches mounted one on each of said side frames, devices anchoring the crutches to their respective side frames with freedom for universal forward, rearward, transverse, and oblique angular turning movements about said anchoring device, said frame structure further involving hand grip portions located forwardly of the crutch anchoring devices and below the upper ends of the crutches, said crutches being axially extendable and contractable and involving elastic elements under yielding pressure to extend the same, whereby under the walking action of an operator the upper ends of the crutches will partake of compound up and down, forward, rearward, and oblique movements with respect to the crutch anchoring devices to permit freedom of body action of the operator.

6. The structure defined in claim 5 in which the said crutches comprise lower end portions and upper end portions that are spring supported on the lower end portions.

7. The structure defined in claim 5 in which the said crutches comprise lower end portions and upper end portions that are spring supported on the lower end portions with freedom for limited rotation on the axes of the crutches.

8. In a device of the kind described, laterally spaced side frames, oscillatory crutches mounted on said side frames, means cross-connecting and spacing said side frames, said cross-connecting means including a lower tie-bar and an upper tie-bar, the one thereof having elements swivelled one upon the other, and the other having sufficient resilience to permit the said dissimilar vertical movements of the two frames required for climbing action.

9. The combination with a chair-like structure of the kind described involving cross connected side frames, of crutches attached to said side frames for forward and rearward swinging movements, a seat carried by said frame structure rearwardly of the crutches, said crutches comprising longitudinally slidably engaged sections, adjustable stop means limiting extending movements of the slidably engaged crutch sections, and yielding means tending to extend the crutch sections to the maximum determined by the adjustable stop means, whereby the maximum extended lengths of the crutches may be made such that said yielding elements must be compressed to permit the crutch attachments to be placed under the arms of a person sitting on said seat.

10. The structure defined in claim 8 in which one of said swivelled elements is locked to one of said side frames and the other is free for angular vertical movements.

11. The structure defined in claim 8 in which one of said swivelled elements is locked to one of said side frames and the other is free for angular vertical movements, both of said crutches being capable of oscillatory movements forwardly and rearwardly and transversely and each involving an incorporated spring element.

12. In a crutch-equipped walker, a wheel supported frame structure having side frames spaced to receive an operator therebetween and cross connected at their rear end portions, crutches independently pivoted to opposite side frames for compound pivotal movements longitudinally and transversely thereof, stop means positively limiting longitudinal and transverse pivotal movements of the crutches, a seat located between the side frames rearwardly of the crutch pivots, and hand grips on the side frames forwardly of the crutch pivots.

13. In a crutch-equipped walker, a wheel-supported frame structure comprising side frames spaced to receive an operator therebetween and cross connected at their rear end portions, an operator's seat supported by the frame structure and located between the side frames adjacent the rear ends thereof, a pair of crutches mounted one on each side frame forwardly of the operator's seat, devices pivoting the crutches to opposite side frames with freedom for universal pivotal movements about the pivoting devices forwardly, rearwardly, transversely, and obliquely of said frame, stop means positively limiting all pivotal movements of the crutches, said crutch pivots being located above the plane of and forwardly of the seat, and a hand grip on each side frame forwardly of the crutch pivots and above the plane of the operator's seat.

14. In a crutch-equipped walker, cross connected forwardly and rearwardly extended side frames each having front and rear wheels and being longitudinally spaced to receive an operator between them, crutch anchoring saddles each pivoted to an opposite side frame and on an axis extending longitudinally of the frames, a crutch pivoted to each saddle on an axis extending transversely of the axis of the first named pivot, co-operating stops on the saddles and side frames positively limiting pivotal movements of the saddles, and co-operating stops on the crutches and saddles positively limiting pivotal movements of the crutches with respect to the saddles.

15. In a crutch-equipped walker, a pair of side frames laterally spaced to receive an operator therebetween and each equipped with front and rear wheels, a tie bar extending between and connecting the side frames at their rear end portions for relative turning movements about the axis of the tie bar, said tie bar including relatively rotatively engaged sections, a hand grip on the front end portion of each side frame and located for gripping by the hands of an operator disposed in a substantially erect position, a crutch anchoring saddle pivotally anchored to each side frame rearwardly of the hand grips and on an axis extending longitudinally of the side frames, a crutch pivoted to each saddle on an axis extending transversely of the axis of the first named pivot, co-operating stops on the saddles and side frames

positively limiting pivotal movements of the saddles, and co-operating stops on the crutches and saddles positively limiting pivotal movements of the crutches with respect to the saddles, said crutches each comprising longitudinally slidably engaged upper and lower sections, stop means limiting extending movements of the slidably engaged crutch sections, and yielding means tending to extend the crutch sections, the upper of said crutch sections being free for limited rotary movements with respect to the lower crutch section on the longitudinal axis of the crutch.

16. An apparatus of the kind described comprising a pair of side frames having front and rear wheels, a cross-tie device connecting the side frames at their rear end portions with freedom for relative turning movement about the axis of said device, a handle on the front end portion of each side frame, and a crutch attachment on each side frame at the intermediate portion thereof.

17. In a crutch-equipped walker, a pair of laterally spaced side frames each equipped with front and rear wheels, a tie bar extending between and connecting the side frames at their rear end portions for relative turning movement about the axis of the tie bar while maintaining the spacing thereof, a hand grip on the front end portion of each side frame, and a crutch attachment mounted on the intermediate portion of each side frame, and devices anchoring the crutches to their respective side frames with freedom for limited angular turning movements about said anchoring devices in directions forwardly, rearwardly, transversely, and obliquely of the side frames.

18. A device of the kind described comprising a pair of side frames having front and rear wheels, a cross-tie device connecting the side frames with freedom for relative turning movement about the axis of said device, a second cross-tie device connecting the side frames and comprising a pair of overlapped flat spring members secured to the side frames, a member encircling the overlapped end portions of the spring members and holding the same in assembled relation, means holding the overlapped end portions of the spring members against relative endwise movement, and a crutch attachment on each side frame, said second cross-tie member being free to warp and permit relative turning movement of the side frames about the axis of the first noted cross-tie member.

19. The structure defined in claim 18 in which the cross-tie devices are adjustable to vary the width between the side frames.

20. In a crutch-equipped walker, a frame structure having connected side frames that are spaced to receive an operator therebetween, crutches extending one from each side frame, devices connecting the crutches to the side frames with freedom for angular turning movements, forwardly, rearwardly, transversely and obliquely with respect to the side frames, said crutches each comprising longitudinally slidably engaged sections the upper of which is provided with a head and is capable of rotary movement about the longitudinal axis of the crutch and with respect to the side frames, means limiting longitudinal extending movements of the slidably engaged crutch sections, and yielding means tending to extend the slidably engaged crutch sections.

21. In a crutch-equipped walker, a frame structure having connected side frames that are spaced to receive an operator therebetween, crutches extending one from each side frame, devices connecting the crutches to the side frames with freedom for angular turning movements, forwardly, rearwardly, transversely and obliquely with respect to the side frames, said crutches each comprising longitudinally slidably engaged sections the upper of which is provided with a head and is capable of rotary movement about the longitudinal axis of the crutch and with respect to the side frames, means limiting longitudinal extending movements of the slidably engaged crutch sections, yielding means tending to extend the slidably engaged crutch sections, and an operator's seat mounted on the frame structure between the side frames and rearwardly of the crutch anchors, and hand grips on the side frames forward of the crutch anchors.

22. In a crutch-equipped walker, laterally spaced wheel-equipped side frames, a longitudinally rigid cross-tie device extending transversely between and connecting the spaced side frames at their rear end portions and including relatively rotary elements permitting one side frame to be raised and lowered at its forward end portion independently of corresponding movements of the other side frame, a hand grip on the front end portion of each side frame, a crutch attachment projecting from the longitudinal intermediate portion of each side frame in rearwardly spaced relation with respect to the hand grips, and devices anchoring the crutches to the side frames with freedom for angular turning movements, forwardly, rearwardly, transversely and obliquely of said frame, said crutches each comprising longitudinally slidably engaged sections, adjustable stop means limiting extending movements of the slidably engaged crutch sections, and yielding means tending to extend the crutch sections, the lower of said slidably engaged crutch sections being non-rotatively anchored to the side frames and the upper of said slidably engaged crutch sections being mounted on the lower section for limited rotation on the longitudinal axis of the crutch.

23. In a crutch-equipped walker, the combination with a portable side frame structure comprising forwardly and rearwardly extending side frames spaced to receive an operator therebetween, said side frames each being provided with front and rear wheels, of a pair of crutches mounted one on the intermediate portion of each side frame, said side frame having hand grip portions located forwardly of the crutches, the front ends of said side frames being free for up and down movements one in respect to the other, a cross-tie device connecting the side frames at their rear end portions with freedom for relative turning movements about the axis of said cross tie device, said crutches being made up of longitudinally slidably engaged sections and involving elastic elements tending to extend the same, whereby when the front end of one side frame is raised with respect to the front end of the other side frame the crutch of that side frame will contract longitudinally.

24. The structure defined in claim 23 in further combination with devices connecting the lower ends of the crutches to their respective side frames for angular turning movements forwardly and rearwardly with respect to the side frames.

FRANK E. CARTER.