March 21, 1944. J. H. FINDLAY 2,344,543

REENTRANT WINDOW FOR X-RAY APPARATUS

Filed Jan. 31, 1942

Fig. 1.

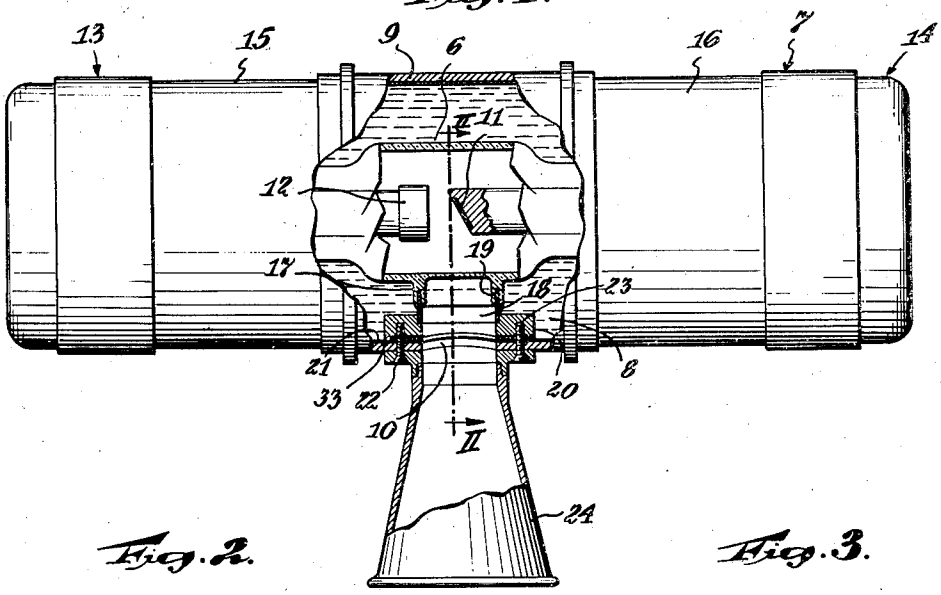

Fig. 2.

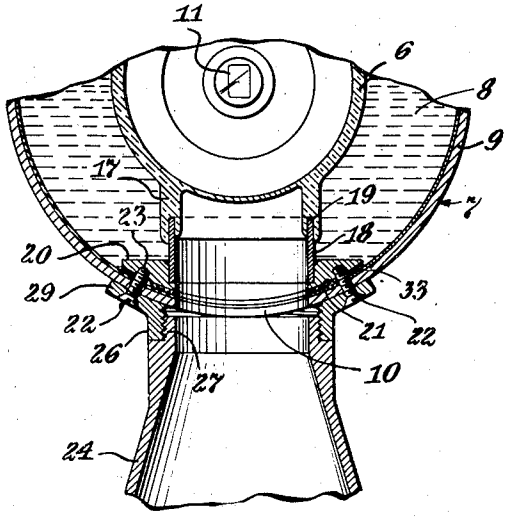

Fig. 3.

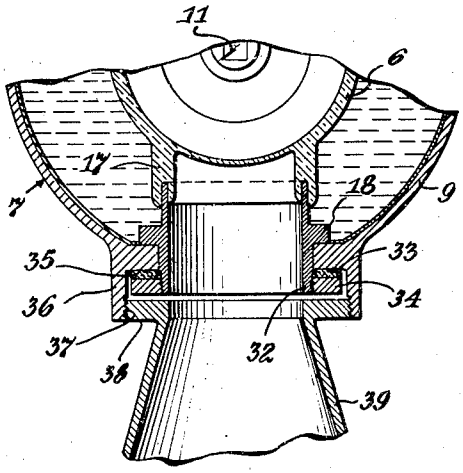

Fig. 4.

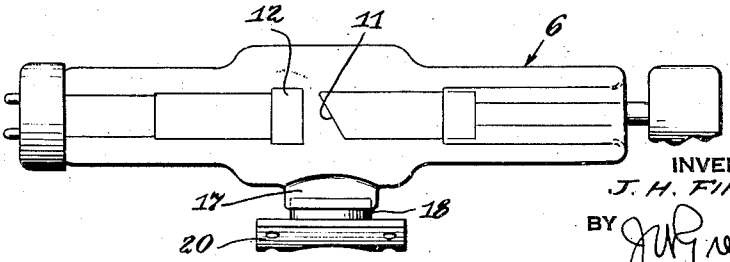

INVENTOR
J. H. FINDLAY
BY J. H. Greenhowe
ATTORNEY

Patented Mar. 21, 1944

2,344,543

UNITED STATES PATENT OFFICE

2,344,543

RE-ENTRANT WINDOW FOR X-RAY APPARATUS

John H. Findlay, Upper Montclair, N. J., assignor to Westinghouse Electric & Manufacturing Company, East Pittsburgh, Pa., a corporation of Pennsylvania

Application January 31, 1942, Serial No. 429,046

5 Claims. (Cl. 250—89)

This invention relates to shockproof X-ray units, especially to those operable for prolonged periods of time, as in the administration of therapeutical treatment for diseases and in industrial radiography, and relates more particularly to the type of X-ray unit in which the X-ray tube is enclosed with an X-ray-opaque metal casing and is immersed in a body of cooling and insulating fluid, such as oil, confined by the casing, the latter having an X-ray-pervious window which defines the path of emission of the X-rays, directed through the window by the anode in known fashion.

X-ray units of this general construction are in successful commercial operation, and an example is shown in Simon Patent 2,049,275, issued to the owner of the instant application. Such units, heretofore, have been subject to the disadvantage in operation that a film of the oil has existed in the space between the window of the casing and the nearest point on the periphery of the X-ray tube, the film extending across the path of the X-rays and affecting unfavorably the efficiency of the beam, especially in the important respect that the oil exerts a filtering and scattering effect which thus affects the quality of the X-rays actually available for use.

It has been proposed by prior workers in the art to reduce the film of oil between the X-ray tube and the surrounding casing to a minimum by the provision of an oriented window; but where X-rays of long wavelength are desired, even a very thin film of oil greatly affects the quality of the X-rays, as does the composition of the casing window, due to their resulting filtering action.

It is accordingly an object of the present invention to eliminate the disadvantages and inconveniences of operation due to the film of oil and casing window by providing means to exclude the oil completely from the path of the X-rays, so that no film or intervening filter exists at that region.

Another object is to provide the X-ray tube with a hollow boss constituting a permanent part of the structure of the tube, surrounding and aiding to define the path of the X-rays, being constructed and arranged for attachment to the casing surrounding the window therein, and acting as an effective barrier for the oil.

Still another object is to provide readily operable means by which the X-ray tube may be secured removably to any of a series of casings of like construction, and by which any of a series of tubes so constructed may be substituted for a defective X-ray tube in the same casing.

Still further objects of my invention will become apparent to those skilled in the art by reference to the accompanying drawing wherein:

Figure 1 is an elevational view of a shockproof X-ray unit constructed in accordance with my present invention, parts being broken away to reveal inner structure;

Fig. 2 is a fragmentary sectional view taken on the line II—II of Fig. 1.

Fig. 3 is a similar vertical cross-sectional section of a modification which the present invention may take, and

Fig. 4 is an elevational view of the X-ray tube of Fig. 1, taken as an entity separately from the casing.

Referring now to the drawing in detail, I have shown in Fig. 1 a shockproof X-ray unit, comprising an X-ray tube designated generally by the reference character **6**, and illustrated separately as a complete entity in Fig. 4, the unit as shown including also a shockproof metal casing designated generally by the reference character **7**, the same being preferably of approved structure constructed and arranged to support the X-ray tube **6** of Fig. 4, in a position extending substantially axially of the casing **7**, wherein it is immersed in a body **8** of cooling and insulating fluid, such as oil, according to known or otherwise suitable practice.

The casing as shown in Fig. 1 is made up of a middle section **9**, provided at **10** with a window for passage of the X-rays directed therethrough by the anode **11** of the X-ray tube, which, with the cooperating cathode **12**, are suitably disposed to produce that effect, and the casing further includes end sections **13** and **14** and intermediate sections **15** and **16**, which are combined in the completed structure to support the X-ray tube in its proper position, together with its associated parts, including leading-in conductors and terminals, all of which may be, and preferably are, of substantially conventional structure, known to those skilled in the art and which do not require further description.

In pursuance of the invention I provide means for completely excluding the oil from the path of the X-rays, and in the present embodiment of the invention as illustrated in the accompanying drawing, this oil-excluding means comprises as its main element a hollow boss **17**, preferably formed integral with the walls of the X-ray tube and of the same vitreous material as the latter,

and surrounding an area of reduced cross section in the envelope wall as can be readily seen in the several figures.

The boss 17 is so disposed that it may be brought readily into alignment with the axis of the window 10 of the casing, and thus forms a window in the envelope wall which aids in defining the path of the X-rays therethrough. The next element in order of the oil-excluding means, comprises a bushing 18 made of "Kovar" metal or of some like metal having the property of ready physical connection with glass and also having substantially the same coefficient of expansion under the heat encountered in the operation of the X-ray unit. The end 19 of the "Kovar" bushing is attached directly to the glass boss 17, of which it is designed to form a permanent part, and the invention provides for the addition to the metal bushing of a bracket 20 which is preferably secured permanently to the bushing 18, as by a metallic union such as welding, so that it is integrated therewith and constitutes a unitary structure with the X-ray tube and may be stored, transported and installed as such.

The bracket 20 has a slightly arcuate contour conforming to that of the interior wall of the casing at the region thereof 21 surrounding the window 10, and various means may be provided to effect its attachment to the casing.

For example, in the structure of Fig. 1, the bracket 20 is shown as secured by screws 22 engaging tapped holes 23 in the bracket and extending through the wall of the casing. When so disposed, the screws may be used also to effect attachment of a flange of annular cross section to the casing which is engaged by a conventional X-ray directional cone 39, the latter being designated generally by the reference character 24 and well-known in the art.

One branch 26 of this flange of annular cross section is threaded to receive a threaded end 27 of the cone 24, while the other branch 29 of the flange is pierced to permit the passage of the screws 22 which engage the tapped holes 23 in the bracket 20, as before mentioned.

In the modification as shown in Fig. 3, the lower end of the "Kovar" bushing 18 is threaded exteriorly, as at 32, to receive a threaded retaining ring 34, which is run up on the end 32, placing under compression a packing ring or gasket 33, against the exterior wall 35 of the casing.

If desired, the wall 35 may be provided with a hollow boss 36 having an interiorly threaded mouth 37 into which may be screwed a correspondingly threaded flange 38 on the direction cone 39 in a manner similar to the other modification.

It is to be noted that packing rings or gaskets 33 may be provided wherever they may be required, as shown in the several embodiments of the present invention.

When the parts above described are assembled, it is readily seen that they completely enclose and define the path of the X-rays and exclude therefrom any oil from the body 8 thereof, the X-rays having only to penetrate the glass envelope of the tube which can be made thin at the window, thus carrying into effect the primary object of the invention as set forth in the opening paragraphs of this specification.

Although several embodiments of the present invention have been shown and described, it is to be understood that still further modifications of the same can be made without departing from the spirit and scope of the appended claims.

I claim:

1. A shockproof X-ray unit comprising a metallic X-ray-opaque metal casing provided with an X-ray-pervious window, an X-ray tube enclosed within said casing and provided with a cathode and an anode which becomes heated during operation, said anode being arranged to emit X-rays in a path extending laterally through the walls of said tube and defined by said window, a body of cooling and insulating fluid in said casing and immersing said X-ray tube, and means hermetically sealed to said envelope and secured fluid-tight to said casing to exclude said fluid from said path of X-ray emission.

2. A shockproof X-ray unit comprising a metallic X-ray-opaque metal casing provided with an X-ray-pervious window, an X-ray tube enclosed within said casing and provided with a cathode and an anode which becomes heated during operation, said anode being arranged to emit X-rays in a path extending laterally through the walls of said tube and defined by said window, a body of cooling and insulating fluid in said casing and immersing said X-ray tube, and means to exclude said fluid from said path of X-ray emission, said means including a structure comprising an annular element extending between and hermetically sealed to said tube and secured fluid-tight to said window.

3. A shockproof X-ray unit comprising a metallic X-ray-opaque metal casing provided with an X-ray-pervious window, an X-ray tube enclosed within said casing and provided with a cathode and an anode which becomes heated during operation, said anode being arranged to emit X-rays in a path extending laterally through the walls of said tube and defined by said window, a body of cooling and insulating fluid in said casing and immersing said X-ray tube, means to exclude said fluid from said path of X-ray emission, said means including a structure comprising an annular glass base formed as an integral part of the envelope of said tube, and a metal bushing of annular form hermetically sealed to said glass base and extending to said window and serving to provide a fluid-excluding area between the envelope of said tube and said casing.

4. A shockproof X-ray unit comprising a metallic X-ray-opaque metal casing provided with an X-ray-pervious window, an X-ray tube enclosed within said casing and provided with a cathode and an anode which becomes heated during operation, said anode being arranged to emit X-rays in a path extending laterally through the walls of said tube and defined by said window, a body of cooling and insulating fluid in said casing and immersing said X-ray tube, means to exclude said fluid from said path of X-ray emission, said means including a structure comprising an annular glass base extending from the envelope of said tube and formed as an integral part thereof, a metal bushing of annular form hermetically sealed to said glass base and serving to extend the fluid-excluding area thereof, and a flange forming part of said bushing and having fastening devices whereby it may be removably secured fluid-tight to said casing around said window.

5. A shockproof X-ray unit comprising a metallic X-ray-opaque metal casing provided with an X-ray-pervious window, an X-ray tube enclosed within said casing and provided with a

cathode and an anode which becomes heated during operation, said anode being arranged to emit X-rays in a path extending laterally through the walls of said tube and defined by said window, a body of cooling and insulating fluid in said casing and immersing said X-ray tube, and means to exclude said fluid from said path of X-ray emission, said means including a composite annular structure hermetically sealed to said tube by an integral glass base, and comprising a metal annular part adapted to be removably secured fluid-tight to said casing around said window by a mechanical union, said composite structure cooperating to exclude said fluid from said path.

JOHN H. FINDLAY.