Sept. 21, 1943. A. E. DAVIES 2,329,697

SWIVEL SEAT

Filed Nov. 22, 1938 2 Sheets-Sheet 1

Fig. 1.

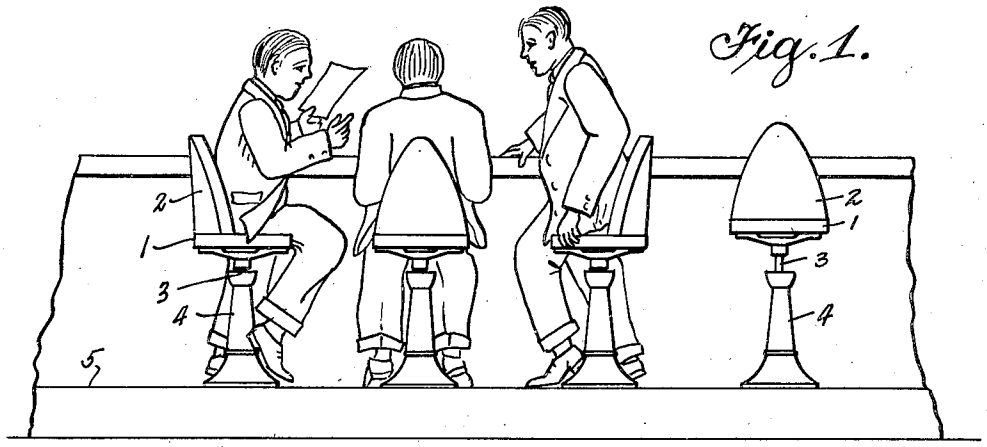

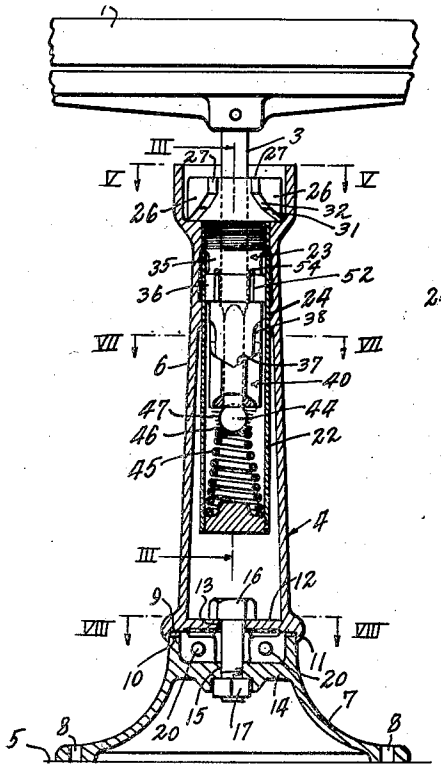

Fig. 2.

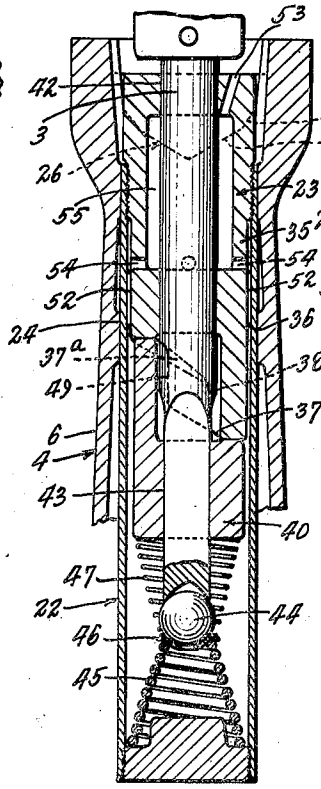

Fig. 3.

Fig. 4.

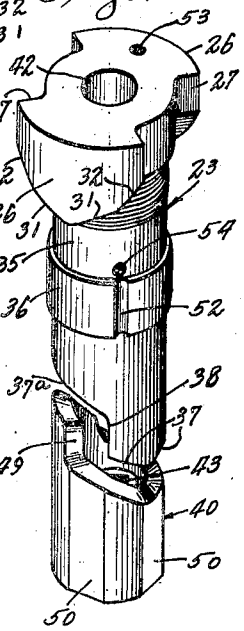

Inventor

Arthur E. Davies

By Lyon & Lyon Attorneys

Sept. 21, 1943. A. E. DAVIES 2,329,697

SWIVEL SEAT

Filed Nov. 22, 1938 2 Sheets-Sheet 2

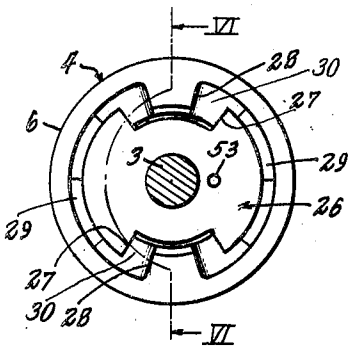


Fig. 5.

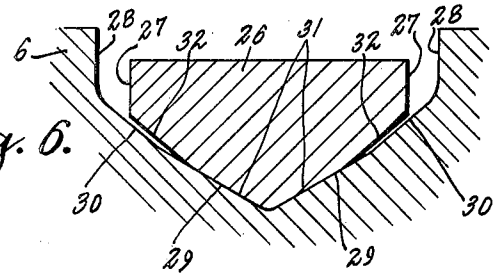


Fig. 6.

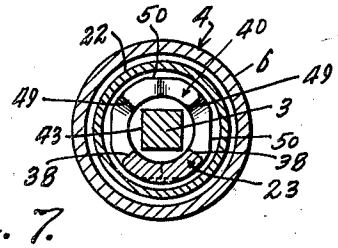


Fig. 7.

Fig. 10.

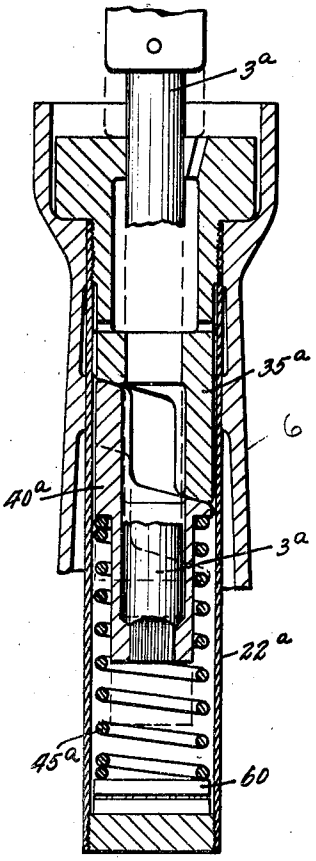


Fig. 9.

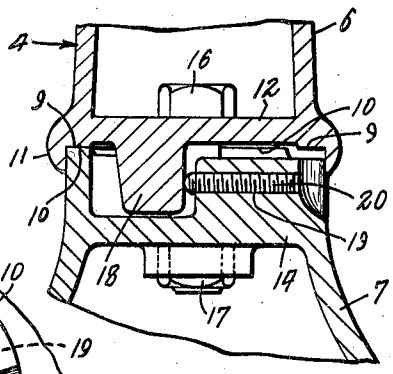


Fig. 8.

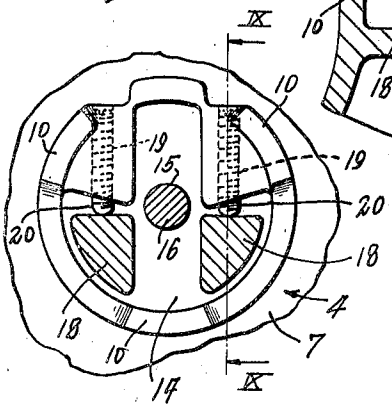


Inventor

Arthur E. Davies

By Lyon & Lyon

Attorneys.

Patented Sept. 21, 1943

2,329,697

# UNITED STATES PATENT OFFICE

2,329,697

## SWIVEL SEAT

Arthur E. Davies, Los Angeles, Calif; Carrington Herman, administrator of Arthur E. Davies, deceased, assignor of twenty per cent to Flossie P. Shadden, Los Angeles, Calif., and eighty per cent to Shirley Anne Davies

Application November 22, 1938, Serial No. 241,763

8 Claims. (Cl. 155—95)

This invention relates to swivel seats and more particularly to seats of the self-restoring type which may be rotated out of a predetermined position, but return to that position when released. Such seats are particularly useful at lunch counters, and the like, where it is desirable that the seats be normally positioned directly facing the counter but capable of being turned when in use, at the convenience of the occupant.

A broad object of the invention is to provide a simple, rugged, and exceptionally practicable swivel seat construction of the self-restoring type.

A more specific object is to provide a swivel seat having a stop mechanism for limiting the extent of swivel movement without noise or shock.

Another specific object is to provide for the ready and accurate adjustment of the normal position of rest of a self-restoring swivel seat.

Still another specific object is to provide a self-restoring swivel mechanism of such design that the main moving parts can work in an oil bath whereby smooth operation and long life are assured.

Other more specific objects and features will become apparent from the following detailed description of one particular embodiment of the invention, this description referring to the drawings, in which

Fig. 1 is a front elevational view showing a counter, and swivel seats in accordance with the invention, positioned in front thereof;

Fig. 2 is a vertical sectional view through the supporting structure of one of the seats shown in Fig. 1, the seat being in normal elevated position;

Fig. 3 is a vertical sectional view, taken approximately in the plane III—III of Fig. 2, with the seat in depressed position;

Fig. 4 is a perspective view of the cam structure incorporated in the mechanism of Figs. 2 and 3;

Fig. 5 is a cross section, taken approximately in the plane V—V of Fig. 2;

Fig. 6 is a sectional detail view, taken approximately along the line VI—VI of Fig. 5, and showing the cam structure developed;

Fig. 7 is a cross section, taken substantially in the plane VII—VII of Fig. 2;

Fig. 8 is a cross section taken substantially in the plane VIII—VIII of Fig. 2;

Fig. 9 is a vertical detail section taken approximately in the plane IX—IX of Fig. 8; and

Fig. 10 is a vertical sectional view, similar to Fig. 3, showing a modified construction.

Referring to Fig. 1, the four swivel chairs therein disclosed are identical, each comprising a seat 1, a back 2 secured to the seat, and a spindle 3 for supporting the seat, which spindle extends into the upper end of a pedestal 4 mounted on a floor or platform 5. The mechanism which constitutes the present invention is enclosed within the pedestal 4 and cooperates with the latter and the spindle 3. This mechanism is such as to permit vertical movement of the seat 1 and spindle 3 between a lower position and an upper position, and for rotary movement of the seat and spindle through approximately 180°. The three leftmost chairs are shown with the seats and spindles in lower position and the rightmost chair has the seat and spindle in uppermost position. The second chair from the left and the rightmost chair are shown in normal position of rotation, facing the counter. The leftmost chair is shown swung into extreme clockwise position and the third chair from the left is shown in extreme counterclockwise position, (the direction being taken looking downwardly, of course).

Referring now to Fig. 2, the pedestal 4 comprises an upper or column portion 6 and a lower or base portion 7. The base portion 7 is adapted to be rigidly secured to a floor by means of screws or bolts passed through apertures 8 in the rim of the base. The column 6 is hollow, containing the swivel mechanism to be described later, and is adjustably anchored at its lower end to the base 7. Thus the lower end of the column 6 has a shoulder 9 which rests upon a shoulder 10 at the upper edge of the base 7. A flange or skirt 11 on the lower edge of column 6 overlies and conceals the contact line between the shoulders 9 and 10. To secure the column 6 and the base 7 together, the column is provided with a bottom wall 12 having an aperture 13 therein and the base 7 is provided with a transverse wall 14 having an aperture 15 therein. The apertures 13 and 15 are centrally disposed and in alignment with each other so that a bolt 16 can be extended through the apertures and employed to clamp the base and column together. The lower end of the aperture 15 in the base 7 is preferably enlarged and shaped to tightly receive a nut 17 on the lower end of the bolt 16 so that the column 6 may be anchored to the base 7 after the latter has been secured to the floor by inserting the bolt 16 from above, through the column 6, and tightening it with a long socket

wrench extending down through the column 6. The swivel mechanism within the column 6 is removable to permit such insertion of a socket wrench. If desired, the nut 17 may be permanently affixed to the base 7, as by welding, or the aperture 15 may itself be threaded to receive the lower end of the bolt 16.

The normal orientation of the spindle 3 with respect to the column 6 is fixed, as will appear later, and therefore the pedestal must be properly oriented at the time of installation. Approximate orientation of the pedestal relative to the lunch counter or other object with which the chair may be associated, is effected by rotating the base 7 into desired position before securing it to the floor with bolts or screws. However, it is often not convenient to exactly orient the base 7 prior to securing it to the floor, and I therefore provide means for limited rotary adjustment of the column 6 relative to the base 7. To this end (referring to Figs. 8 and 9, as well as to Fig. 2), the bottom wall 12 of the column 6 is provided with a pair of downwardly projecting lugs 18 symmetrically disposed on opposite sides of a central vertical plane of the column, and the base 7 is provided with a pair of threaded recesses 19 receiving screws 20, which project from the inner end of the recesses 19, and contact with the lugs 18 on the column. Obviously, by oppositely shifting the screws 20, the column may be rotatably adjusted with respect to the base 7 and when both screws are tightened up against the lugs 18, any further relative rotation between the column and base is positively prevented. In practice, the bolt 16 is slightly loosened, the screws 20 are turned to orient the columns to the proper position, and then the bolt 16 tightened.

The construction disclosed in Figs. 2 to 7 comprises a swivel mechanism completely contained within an oil-tight housing 22, which housing 22 is tubular in form and is suspended within the column 6. Thus referring to Fig. 2, the upper end of the tubular housing 22, hereinafter referred to as a tube, is internally threaded and receives a threaded plug member 23, which is shown in perspective in Fig. 4. The tube 22 is suspended from the plug member 23 by virtue of the threaded connection therebetween, and the plug 23 in turn is supported by the column 6. The column 6 is provided with cylindrical inner bearing surfaces 24, which snugly receive the tube 22 and prevent any tilting or radial movement of the latter. However, the entire vertical forces applied to the tube 22 are transferred through the plug member 23 to the column 6. Thus the upper end of column 6 is enlarged to a diameter substantially greater than the diameter of the tube 22, defining shoulders on which wings 26 of the plug member 23 rest. The contacting surfaces of the shoulders in the column 6 and on the wings 26, instead of being flat horizontally, are inclined, as shown to best advantage in the developed view of Fig. 6, in which view the lower contacting surface of each wing 26 is substantially wedge-shaped and the cooperating supporting surface on the column 6 is similarly shaped. It will be observed that by virtue of these wedge-shaped contacting surfaces the member 23 and the tube 22 will normally remain in a fixed position of rotation relative to the column 6. However the supporting shoulders on the column are wider circumferentially than the shoulders on the wings 26 so that limited rotation of the tube 22 relative to the column, is possible. However, such movement produces, a simultaneous upward movement of the wings 26 and the tube 22 so that the rotational movement is opposed by the weight of the assembly including the tube 22, spindle 3, seat 1, and also the weight of an occupant of the seat. Should the rotary movement of the wings 26 carry far enough, it would be definitely stopped by contact of vertical edge surfaces 27 on the wings against juxtaposed vertical surfaces 28 on the column 6. However, the resistance to movement afforded by the friction between the supporting shoulders on the column 6 and the supported shoulders on the wings 26, is ordinarily sufficient to prevent the movement continuing until the surfaces 27 contact against the surfaces 28.

To further provide for increasing the resistance to rotation of the member 23 relative to the column 6 prior to contact of the surfaces 27 and 28, each shoulder on the column 6 comprises a pair of central flat intersecting surfaces 29 which merge at their outer ends into flat surfaces 30, which latter surfaces are steeper than the surfaces 29. The wings 26 have a pair of intersecting surfaces 31 having the same inclination as the surfaces 29, but being shorter than the latter.

These surfaces 31 merge into outer flat surfaces 32 which have the same inclination as the surfaces 30, i. e., surfaces 32 are parallel to surfaces 30, just as the surfaces 31 are parallel to the juxtaposed surfaces 29. It is obvious, by virtue of the fact that the surfaces 31 are shorter than the surfaces 29, that the juxtaposed surfaces 30 and 32 are normally spaced from each other so that they do not function to restrain initial rotary movement of the wings 26; such initial movement is restrained only by contact between the surfaces 29 and 31. The inclination of the surfaces 29 and 31 is such as to ordinarily restrain rotation of the member 23 relative to the column 6. However, should a strong torque be applied to the member 23 so that the friction between the surfaces 29 and 31 is insufficient to restrain movement, then when the movement continues a short distance, the surfaces 30 and 32 will be brought together and these surfaces, because of their greater inclination from the horizontal, oppose increased resistance to further rotary movement and usually function to stop the motion prior to contact of the vertical surfaces 27 and 28.

Obviously the cooperating surfaces of the wings 26 and the column 6 might be curved to provide continuously increased resistance to motion. However, an advantage of employing the cooperating flat surfaces 31—29, 30—32 is that they provide surface contact of relatively large area, so that wear is reduced and the life of the parts lengthened. If continuously curved surfaces were employed, the surfaces on the column member 6 would have to have a larger radius of curvature than the cooperating surfaces on the wings 26 and hence there would be only line contact between the cooperating surfaces, resulting in excessive wear and relatively rapid deformation of the surfaces.

The structure described involving the wing members 26 and the cooperating supporting surfaces on the column 6 move relative to each other only in response to exceptionally violent forces, rotating the seat to the limit of its travel. Ordinarily, the body member 23 does not rotate and the swivel action of the seat is provided by

a mechanism within the tube 22. This mechanism will now be described.

The body member 23 is provided with a downwardly extending hollow stem 35 which is relatively rigid with respect to the tube 22; thus it may be provided with an enlarged rib or shoulder 36 which fits snugly within the tube to prevent any radial motion of the lower end of the stem with respect to the tube. At its lower end, the stem 35 terminates in a cam surface, which consists of a lowermost convex or wedge-shaped surface 37 which merges at its upper ends into straight, vertical surfaces 38. At their upper ends, the vertical surfaces 38 merge into conical surfaces 37a, which extend upwardly and toward each other, terminating at a high point diametrically opposite the apex of the surface 37. Positioned immediately below the stem 35 is a rotary cam member 40 having an upper cam surface complementary to the cam surfaces on the lower end of stem 35, previously described. This cam member 40 is loosely fitted in the tube 22 and is guided for vertical movement by the spindle, which supports the seat 1.

This spindle 3 is cylindrical throughout its upper portion and is snugly rotatably fitted in a central bore 42 in the body member 23, the cylindrical portion of the spindle 3 extending substantially through the stem 35 of the member 23.

At its lower end, the spindle or stem 3 is made square in cross section instead of circular. The square portion of the stem fits snugly in a square aperture 43 in the cam member 40 so that the latter is constrained to rotate with the stem 3, but the stem is free to move vertically through the cam member. The lower end of the stem 3 rests upon and is supported by a ball 44 which in turn is supported on a helical spring 45, the lower end of the spring resting on the bottom wall of the tube 22 and being supported thereby. A seat member 46 may be provided between the upper end of the spring 45 and the ball 44. A relatively light helical spring 47 is normally compressed between the seating member 46 and the lower end of the cam member 40, the sole function of this spring 47 being to maintain contact between the cam surface on the member 40 and the cam surface on the lower end of stem 35.

The spring 45 is of such stiffness that it does not compress in response to the normal weight of the seat 1, but is compressed by the additional weight of an occupant on the seat. Therefore, when the seat is unoccupied, it is maintained in the uppermost position shown in Fig. 2, in which position the ball 44 not only rests against the lower end of the stem 3 but also rests against the lower end of the cam member 40 so that the relatively stiff spring 45 is effective to urge the cam surfaces together. This spring force is such as to cause the seat to rotate into and assume the position shown in Fig. 2, in which the complementary portions of the cam surfaces on the members 35 and 40 are juxtaposed to each other. This is the normal position of the seat. If the seat is turned away from this normal position, the rotation of the cam member 40 relative to the cam surface on the lower end of stem 35, forces the member 40 downwardly, thereby further compressing the spring 45. At the same time, the spindle 3 follows the ball 44 downwardly. If the seat is turned far enough, it will cause one of the vertical surfaces 38 on the stem member 35 to be engaged by one of the complementary vertical surfaces 49 on the cam member 40, thereby preventing any further relative rotation between those parts. Thereafter, if the rotary force is sufficiently great, the entire assembly including the tube 22 will be rotated to move the wing members 26 relative to the column 6 in the manner previously described. When the rotary force is removed from the seat, the entire assembly, including tube 22 is restored to normal position with respect to the column 6, by gravity, and the spindle 3 is restored to normal position with respect to the tube 22, by the force of the spring 45, which in re-expanding causes the cam member 40 to slide along the cam surfaces on the stem 35 into the normal position shown in Fig. 2.

It is desirable that the mechanism positively restore the seat to normal position when it is unoccupied, but permit relatively free swivel action when the seat is occupied. Such a result is provided with the structure described.

Thus referring to Fig. 3, when the weight of an occupant is on the seat 1, the spring 45 is compressed by the spindle 3 and the ball 44 is carried out of contact with the cam member 40. Therefore the only upward force acting upon the cam member 40 is that exerted by the relatively weak spring 47. As previously stated, spring 47 is preferably barely strong enough to support the weight of the cam member 40. Therefore the resistance it presents to downward movement of the cam 40 in response to rotation of the spindle 3, is negligible, and an occupant of the seat can turn it in either direction without noticing any appreciable resistance to movement as the inclined surfaces of the cams move over each other. However, if the seat is turned far enough to contact the vertical surfaces 38 and 49 they positively oppose and prevent further turning movement. If the occupant leaves the seat while it is turned out of normal position, as illustrated in connection with the third chair from the left in Fig. 1, then as soon as the occupant's weight is removed from the seat, the spring 45 restores the ball 44 into position against the lower end of the cam member 40 and thereafter the force of the spring 45 is effective to urge the cam 40 upwardly, causing it to rotate into normal position.

As previously mentioned, the tube 22 is imperforate and is adapted to contain lubricating oil so that all of the contacting surfaces are continually lubricated. In order to prevent interference of the vertical movement of the cam member 40, due to a dashpot effect, the exterior surface of the latter is cut away, as indicated at 50, to provide channels for the oil to by-pass through, as the cam moves up and down. Furthermore, as the spindle 3 moves up and down, it displaces oil from the lower portion of the tube 22, and to permit escape of such displaced oil, the collar 36 is provided with one or more channels 52, and one or more holes 54 are provided above the collar, for oil to flow into and out of a chamber 55. A vent hole 53 is provided in the body member 23 to permit air to flow into and out of the chamber 55 as the oil level therein falls and rises with movement of the spindle 3. This vent hole 53 may also be employed as an oil filler hole.

A simpler embodiment of the structure within the tube 22 is disclosed in Fig. 10, in which parts corresponding to those in the remaining figures bear the same reference numerals with the suffix a. In this modification, the ball 44 and auxiliary spring 47 are eliminated, the spring 45a

bearing directly against the cam member **40a** and the lower end of the spindle **3a**, instead of being slidable through the cam member **40a**, is supported thereby so that the cam member moves down with the spindle. Thus the spindle **3a** may have a very short reduced squared end thereon fitting into the squared aperture in the cam **40a**. In order to reduce resistance to rotation when an occupant is on the seat, the spring **45a** is preferably supported on an antifriction bearing **60** in the bottom of the tube **22a**. It is to be understood that such an antifriction bearing may also be employed in the structure shown in Fig. 2, although it is not so necessary there because of the interpositioning of the ball **44**, which itself offers low resistance to rotation relative to its contacting members. Of course, if desired, an antifriction bearing can be provided at the top of the spring instead of at the bottom thereof, in the modification of Fig. 10.

In the operation of the modification shown in Fig. 10, when the seat is occupied, the spindle **3a** moves down to compress the spring **45a**, and the inclined surfaces of the cam member **40a** are carried clear of the cooperating complementary surfaces on the stem **35a** so that there is no restoring force. However, when the occupant's weight is removed from the seat, the full force of the spring **45a** is effective to urge the cam surfaces together, causing them to slide into the position of equilibrium shown in Fig. 2, the cam surfaces in the modification shown in Fig. 10 having the same shape as those shown in Fig. 2.

Although for the purpose of explaining the invention two specific embodiments thereof have been described in detail, it is to be understood that the numerous changes may be made from the particular structure shown without departing from the invention, which is to be limited only to the extent set forth in the appended claims.

I claim:

1. A swivel seat comprising a seat member, pedestal means, a spindle depending from said seat member into the pedestal member, a first cam in said pedestal means having a downwardly facing cam surface, a second cam below said first cam and adapted when urged upwardly against said first cam to be rotated thereby into a predetermined position, said spindle extending through and being vertically slidable with respect to both said cams and rotatable with respect to the first cam but non-rotatable with respect to the second cam, spring means for normally, yieldably supporting said second cam against downward movement away from said first cam, and means including said spindle for depressing said spring means out of supporting relation with said second cam in response to a load on said seat member.

2. The combination described in claim 1, with additional means for supporting said second cam when said spring means is depressed by said spindle.

3. The combination described in claim 1, with auxiliary spring means of substantially less stiffness than said first-mentioned spring means for yieldably supporting said second cam when said first-mentioned spring means is depressed by said spindle.

4. A seat comprising a seat member, a pedestal including a base member adapted to be rigidly anchored to a floor and a column member rising therefrom, means for normally supporting said seat member on said column in predetermined position of orientation with respect thereto, means for securing said column member to said base member against vertical and lateral movement with respect thereto, and means for rotatably adjusting said column member on said base member and rigidly maintaining it in adjusted position comprising a pair of stop members on said column member disposed on opposite sides of the center thereof, and a pair of screw members in said base member on opposite sides of the center thereof and adapted to abut against said respective stop members, whereby said column member may be arcuately adjusted with respect to said base member by tightening one of said screws and loosening the other.

5. A swivel seat comprising a seat member, a spindle downwardly depending therefrom, a pedestal having a recess in the upper end thereof, a casing supported by said pedestal within the recess therein, a plug member positioned in and attached to the upper end of said casing, said plug member having a central aperture therein for receiving said spindle and having an inclined cam surface on the lower end thereof, the upper portion of said spindle being cylindrical for free rotation in said plug member and the lower end portion being polygonal and of smaller lateral dimension than the upper portion, a movable cam member within said casing below said plug member, having an aperture for nonrotatably receiving the polygonal lower end portion of said spindle, the spindle projecting through said plug member into said movable cam member, and spring means supported by the bottom wall of said casing for yieldably supporting said spindle and said movable cam member, said spindle being freely movable upwardly with respect to said movable cam member, whereby it may be lifted out of said casing.

6. A seat comprising a seat member, a pedestal, means for supporting said seat member for rotary and vertical motion on said pedestal and defining a chamber in the pedestal containing oil, and a spindle on said seat member depending into said chamber, said chamber including means for guidingly supporting said spindle, said spindle displacing oil from the lower part of said chamber in response to downward movement, and means defining oil ducts for conducting oil so displaced to the portion of said spindle within the upper part of said chamber to lubricate the same.

7. In a swivel seat, a seat member, a spindle secured to and depending from said seat, a pedestal having an upstanding hollow column, casing means within said column, said casing means having a guide aperture in the upper end thereof for receiving said spindle, mechanism within said casing means for yieldably supporting said spindle for a limited range of rotary motion with respect to casing means, and means supporting said casing means in said column comprising cam means on the casing means and cooperating cam means on the column for engaging and supporting said cam means on the casing means, said cooperating cam means forcing said casing means to move upwardly simultaneously with rotary movement in either direction from a predetermined normal position of orientation with respect to said column, said mechanism within said casing means offering less resistance to rotary movement of said spindle within said limited range of rotary motion than said cooperating cam means offer to relative rotary motion between said casing means and column, whereby

said mechanism yieldably resists rotary motion of said spindle with relatively less resistance than said supporting means.

8. A swivel seat comprising a seat member, pedestal means, a spindle depending from said seat member into the pedestal means, a first cam in said pedestal means having a downwardly facing cam surface, a second cam below said first cam and adapted when urged upwardly against said first cam to be rotated thereby into a predetermined position, said spindle extending through and being vertically slidable and rotatable with respect to said first cam and movable both vertically and rotatably with said second cam, spring means for normally yieldably supporting said second cam against downward movement away from said first cam, and means including said spindle for depressing said second cam out of contact with said first cam against force of said spring means in response to a load on said seat member, said cams having normally engaged inclined surfaces for yieldably permitting rotation of said seat member through a predetermined arc, and having vertical surfaces which interengage and prevent rotation beyond the end of said arc, said vertical surfaces being of such length as to interengage in all vertical positions of said second cam.

ARTHUR E. DAVIES.