June 22, 1943. W. R. PERRY 2,322,466

BELT

Filed June 21, 1941

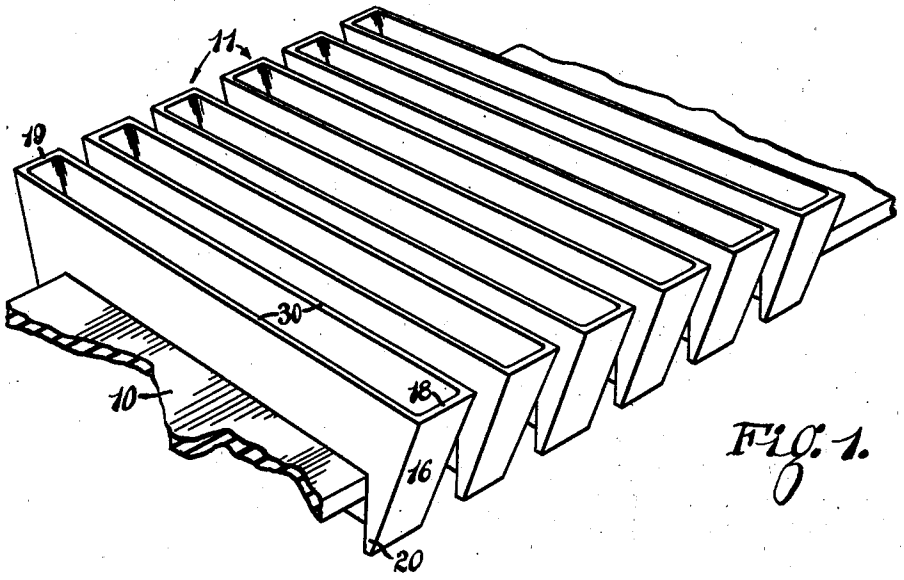

Fig. 1.

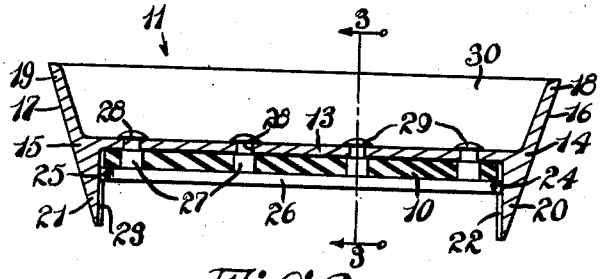

Fig. 2.

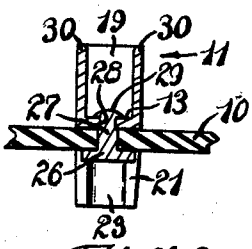

Fig. 3.

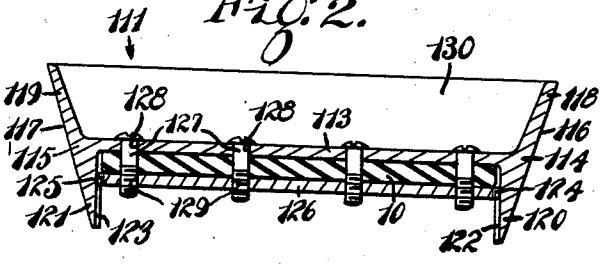

Fig. 4.

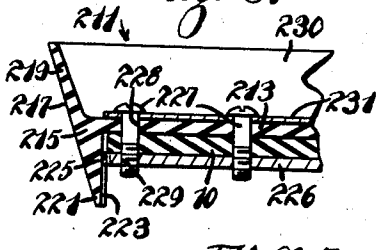

Fig. 5.

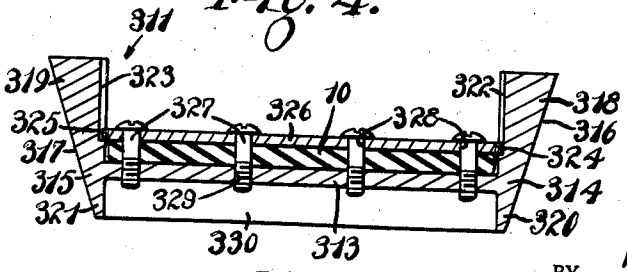

Fig. 6.

INVENTOR.
William R. Perry,
BY Hood + Hahn.
ATTORNEYS

Patented June 22, 1943 2,322,466

UNITED STATES PATENT OFFICE

2,322,466

BELT

William R. Perry, Columbus, Ind., assignor to Reeves Pulley Company, Columbus, Ohio, a corporation of Indiana

Application June 21, 1941, Serial No. 399,045

9 Claims. (Cl. 74—236)

The present invention relates to belts, and more particularly to belts of the character comprising a body member of considerable tensile strength but readily flexible both longitudinally and laterally, to which are secured a plurality of transverse stiffener blocks; and the invention pertains more particularly to the provision of an improved form of stiffener block which, because of its novel construction, not only possesses certain novel characteristics in itself, but contributes to an improvement in the operation of the belt as a whole.

The primary object of the invention, then, is to provide an improved belt of the character above described; while subsidiary objects reside in the provision of an improved stiffener block for such a belt, having advantageous characteristics which will appear as the description proceeds.

To the accomplishment of the above and related objects, my invention may be embodied in the forms illustrated in the accompanying drawing, attention being called to the fact, however, that the drawing is illustrative only, and that change may be made in the specific constructions illustrated and described, so long as the scope of the appended claims is not violated.

Fig. 1 is a perspective view of a fragment of a belt of the character above described with my improved stiffener blocks associated therewith;

Fig. 2 is a transverse section through a preferred form of stiffener block;

Fig. 3 is a section taken substantially on the line 3—3 of Fig. 2 and looking in the direction of the arrows;

Fig. 4 is a section similar to Fig. 2 but showing a modified form of stiffener block;

Fig. 5 is a fragmentary section showing a still further form of stiffener block; and

Fig. 6 is a transverse section through a still further form of stiffener block.

Referring more particularly to Figs. 1 to 3, it will be seen that I have illustrated a belt comprising a body 10 which may be made of any suitable material having considerable tensile strength, but readily flexible, particularly about transverse lines. Such a material will ordinarily be likewise flexible about longitudinal lines; and is therefore not adapted for use in connection with V-pulleys, unless extraneously provided with lateral stiffening means. According to the present invention, such lateral stiffening means may comprise blocks 11 or, alternatively, blocks like those indicated by the reference numeral 111 in Fig. 4, or by the reference numeral 211 in Fig. 5, or by the reference numeral 311 in Fig. 6.

In the belt section illustrated in Fig. 1, the block indicated by the reference numeral 11 comprises a bar 13 made of any suitable metal, adapted to extend transversely of the belt body 10 and integrally carrying at its opposite ends, end members 14 and 15 which, respectively, present oppositely facing surfaces 16 and 17 allochirally angularly related to a median plane perpendicular to the beam 13. Said end members 14 and 15 are respectively formed to provide portions 18 and 19 projecting above the plane of the beam 13, and portions 20 and 21 projecting below the plane of the beam 13. As is clearly indicated in Fig. 2, the beam 13 is located substantially midway between the upper and lower edges of the projecting portions of the end members 14 and 15.

Preferably, the block of Figs. 1 to 3 is made of a metal having a relatively low specific gravity and a relatively high thermal conductivity rate, so that the block will be as little as possible affected by centrifugal force, and will readily dissipate the heat produced in operation.

In the block of Figs. 1 to 3, the projections 20 and 21 are formed to provide mutually facing surfaces substantially parallel with the median plane perpendicular to the beam 13, and said surfaces are provided with grooves 22 and 23 with which cooperate tongues 24 and 25 formed at opposite ends of a clamp plate 26 adapted to be associated with the block 11. In said form of the invention, the clamp plate 26 carries a plurality of integral metal pins 27 adapted to be projected through the belt body 10 and through apertures 28 formed in the beam 13. The pins 27 will snugly fit the apertures 28, and will project to a material degree beyond the uppermost surface of the beam 13 when the plate 26 is pressed against the belt body 10 to clamp or grip said body against the lower surface of the beam 13; and after the plate 26 has been so associated with the belt body and beam 13, the pins 27 may be headed or riveted over, as at 29, by a single stroke of a press, to clamp the block as a whole in place upon the belt body 10.

It is of importance that the ends of the plate 26 shall cooperate with surfaces formed upon the projections 20 and 21 in such a manner as to permit the transmission of driving forces between said plate and said projections, independently of the securing pins 27. In the form of block illustrated in Figs. 1 to 3, the grooves 22 and 23 result in the production of surfaces angularly related to a line perpendicular to the longitudinal axis of the beam 13 and located in the median

plane perpendicular to the longitudinal axis of said beam. Specifically, the said surfaces formed by the grooves 22 and 23 are perpendicular to such a line and to the axis of the beam 13; but the criterion is that the said surfaces shall be so related to the direction of movement of the belt that driving forces impressed upon the plate 26 through the belt may be transmitted to the end members 14 and 15 independently of the pins 27; and that driving forces impressed upon the surfaces 16 and 17 may be transmitted to the plate 26 independently of the pins 27.

It will be seen that the projections 18, 19, 20, and 21 form, with the beam 13, two oppositely facing sockets, the lower one of which is open in the direction of belt movement, but the upper one of which is completely bounded by the projections 18 and 19 and the walls 30, said projections and walls cooperating to produce a heat dissipating fin.

Of course, friction material (not shown) will be suitably bonded to the surfaces 16 and 17, to provide a suitable working surface for cooperation with the angularly related surfaces of a V-pulley with which the belt is to be used.

If desired, the organization of Figs. 1 to 3 may be formed of material other than metal, so long as the projecting ends of the pins 27 are, at the time of assembly, sufficiently malleable to permit the riveting operation above described. For instance, all of the parts of the block of Figs. 1 to 3 except the pins 27 might be formed of suitable plastic, while the pins might be made of metal suitably secured in place in the plastic plate 26. Alternatively, the pins 27, as well, may be formed of suitable plastic material; and they may be integral with either the plate 26 or the beam 13. In assembly, the projecting ends of such plastic pins may be sufficiently softened by local application of heat to permit the riveting operation. As a still further alternative, the projecting heads of plastic pins 27 might be surrounded, during the assembly operation, with a suitable fluent adhesive material of such a character as to harden in a relatively short time to non-fluent condition.

In Fig. 4, I have illustrated a somewhat modified form of construction, in which the block 111 consists of the beam 113 integrally carrying end members 114 and 115 providing surfaces 116 and 117 identical with the surfaces 16 and 17, and having projections 118, 119, 120, and 121 like the projections 18, 19, 20, and 21. As in the structure of Figs. 1 to 3, the projections 120 and 121 are formed with grooves 122 and 123 for the reception of tongues 124 and 125 on a clamp plate 126. In place of the pins 27 integral with the clamp plate 26, however, I provide in Fig. 4 a plurality of screws 127 snugly passing through apertures 128 formed in the bar 113 and, threaded into tapped holes 129 formed in the plate 126. Obviously, the screws 127 may be turned up to pull the plate 126 into position to clamp the belt body 10 between said plate and the beam 113. In all other respects, the block 111 corresponds to the block 11 of Fig. 2. The block 111 is formed with walls 130 corresponding to walls 30 of the block 11.

The block 211 of Fig. 5 is made of plastic material, and comprises a beam 213 carrying end members, only one of which, 215, is shown in the drawing. An angular working surface 217 is provided by said end member 215, which has upward extension 219 and downward extension 221. The latter extension or projection is formed with a groove 223 with which cooperates a tongue 225 at one end of a clamp plate 226 which is preferably, though not necessarily, formed of metal, as shown. The beam 213 is provided with apertures 228 for the reception of screws 227 which are threaded into tapped holes 229 in the plate 226; and preferably, though not necessarily, a metal reinforcing plate 231 is interposed between the heads of the screws 227 and the plastic beam 213. I prefer to form the block 211 with walls 230 corresponding to the walls 30 of the block 11.

An alternative form of block 311 is shown in Fig. 6. In this form of block, the beam 313 is disposed somewhat below the midpoint of the end members 314 and 315. Said end members provide allochirally angularly related working surfaces 316 and 317, and are formed with upward projections 318 and 319 and downward projections 320 and 321. Grooves 322 and 323 are formed, in this form of block, in the adjacent surfaces of the upward projections 318 and 319, respectively, but cooperate similarly with tongues 324 and 325 formed on opposite ends of a clamp plate 326. Screws 327 take through apertures 328 in the clamp plate 326 and, extending through the belt 10, engage in threaded holes 329 in the beam 313. In this form of the invention, the lower socket, rather than the upper socket, is bounded by walls 330 corresponding to the walls 30 of Fig. 2.

I claim as my invention:

1. A belt comprising a body strand of material of high tensile strength but readily flexible both longitudinally and laterally, and a plurality of longitudinally-spaced, transversely rigid stiffener blocks secured to said body, each of said blocks comprising a transverse beam integrally carrying members at its opposite ends formed to present oppositely facing surfaces allochirally angularly related to a plane perpendicular to said beam, and one surface of said beam lying in parallelism with a surface of said belt body, a clamp plate lying in parallelism with the opposite surface of said belt body, means clamping said plate and beam together to grip said belt body, said faces projecting materially above and below said belt body and said clamp plate, and cooperating means on said plate and said end members for transmitting forces longitudinally of said belt body between said plate and said end members.

2. A transverse stiffener block for belts comprising a transverse beam integrally carrying members at its opposite ends formed to present oppositely facing surfaces allochirally angularly related to a plane perpendicular to said beam, said faces projecting above and below the median plane of said beam, a clamp plate, and means for securing said plate in cooperative relation with one surface of said beam between said end members and nearer to said beam than to the adjacent ends of said projecting faces, said plate and end members being provided with cooperating means for transmitting forces therebetween independent of said securing means.

3. A transverse stiffener block for belts comprising a transverse beam integrally carrying members at its opposite ends formed to present oppositely facing surfaces allochirally angularly related to a plane perpendicular to said beam, said faces projecting above and below the median plane of said beam, the projections of said end members in one direction presenting mutually facing surfaces parallel with said first-named plane, a clamp plate, means for securing said plate in cooperative relation with one surface of

said beam between said end members, and cooperating means on said plate and on said parallel surfaces for transmitting forces between said end members and said plate independent of said securing means.

4. A transverse stiffener block for belts comprising a transverse beam integrally carrying members at its opposite ends presenting oppositely facing surfaces allochirally angularly related to a median plane perpendicular to the longitudinal axis of said beam and projecting above and below the median axial plane of said beam, the projections of said end members in one direction from said beam presenting mutually facing surfaces parallel with said first-named plane, a groove formed in each of said last-named surfaces and opening through the outer end thereof, a clamp plate received between said last-named projections and provided with means slidably enterable in said grooves to transmit forces between said end members and said plate in the direction of said line, and means independent of said last-named means for securing said plate to said beam.

5. A transverse stiffener block for belts comprising a transverse beam integrally carrying members at its opposite ends presenting oppositely facing surfaces allochirally angularly related to a median plane perpendicular to the longitudinal axis of said beam and projecting above and below the median axial plane of said beam, a clamp plate receivable between those projections of said end members which are closer to said first-named plane, means for securing said clamp plate to said beam, and a tongue and groove connection between each end of said plate and the adjacent end member projection.

6. A transverse stiffener block for belts comprising a transverse beam integrally carrying members at its opposite ends presenting oppositely facing surfaces allochirally angularly related to a median plane perpendicular to the longitudinal axis of said beam and projecting above and below the median axial plane of said beam, said beam being formed with a plurality of apertures therethrough, a clamp plate receivable between projections of said end members in one direction, a plurality of pins integrally carried by said plate and projected through said apertures, said pins being headed over on the opposite side of said beam to secure said plate in position, and cooperating means on said beam and at the extremities of said plate for transmitting forces between said beam and plate in the direction of travel of said belt.

7. A transverse stiffener block for belts comprising a transverse beam integrally carrying members at its opposite ends presenting oppositely facing surfaces allochirally angularly related to a median plane perpendicular to the longitudinal axis of said beam and projecting above and below the median axial plane of said beam, said beam being formed with a plurality of apertures therethrough, a metal clamp plate receivable between projections of said end members in one direction, and a plurality of metal pins integrally carried by said plate and projected through said apertures, said pins being riveted over on the opposite side of said beam to secure said plate in position, the ends of said beam and said projections being formed with cooperating, force-transmitting portions.

8. A transverse stiffener block for belts comprising a transverse beam integrally carrying members at its opposite ends presenting oppositely facing surfaces allochirally angularly related to a median plane perpendicular to the longitudinal axis of said beam and projecting above and below the median axial plane of said beam, said beam being formed with a plurality of apertures therethrough, a clamp plate receivable between projections of said end members in one direction, and a plurality of metal pins carried by said plate and projected through said apertures, said pins being riveted over on the opposite side of said beam to secure said plate in position, the ends of said beam and said projections being formed with cooperating, force-transmitting portions.

9. A transverse stiffener block for belts comprising a transverse metal beam integrally carrying members at its opposite ends presenting oppositely facing surfaces allochirally angularly related to a median plane perpendicular to the longitudinal axis of said beam and projecting above and below the longitudinal axis of said beam, said projections forming with said beam two oppositely opening sockets, one of said sockets being adapted to receive a section of a belt body, a clamping plate received in said one socket, means for securing said plate in said socket to grip said belt section, and the other of said sockets being at least as deep as said one socket and being completely bounded by a strengthening and heat-dissipating metal fin.

WILLIAM R. PERRY.