June 15, 1943. J. W. GURLEY 2,321,810

ROTARY PUMP

Filed Sept. 8, 1941 3 Sheets-Sheet 1

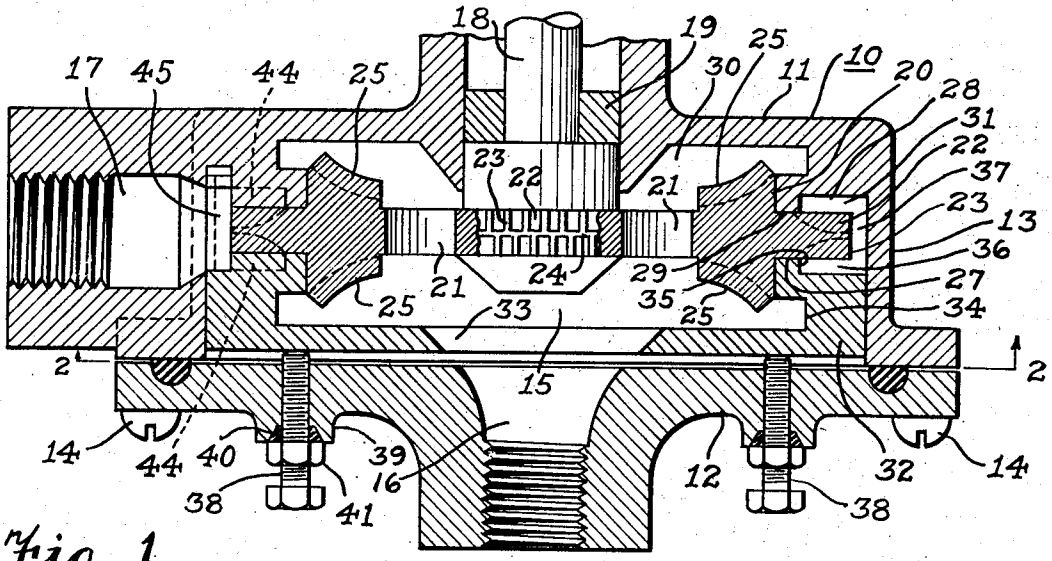

Fig. 1

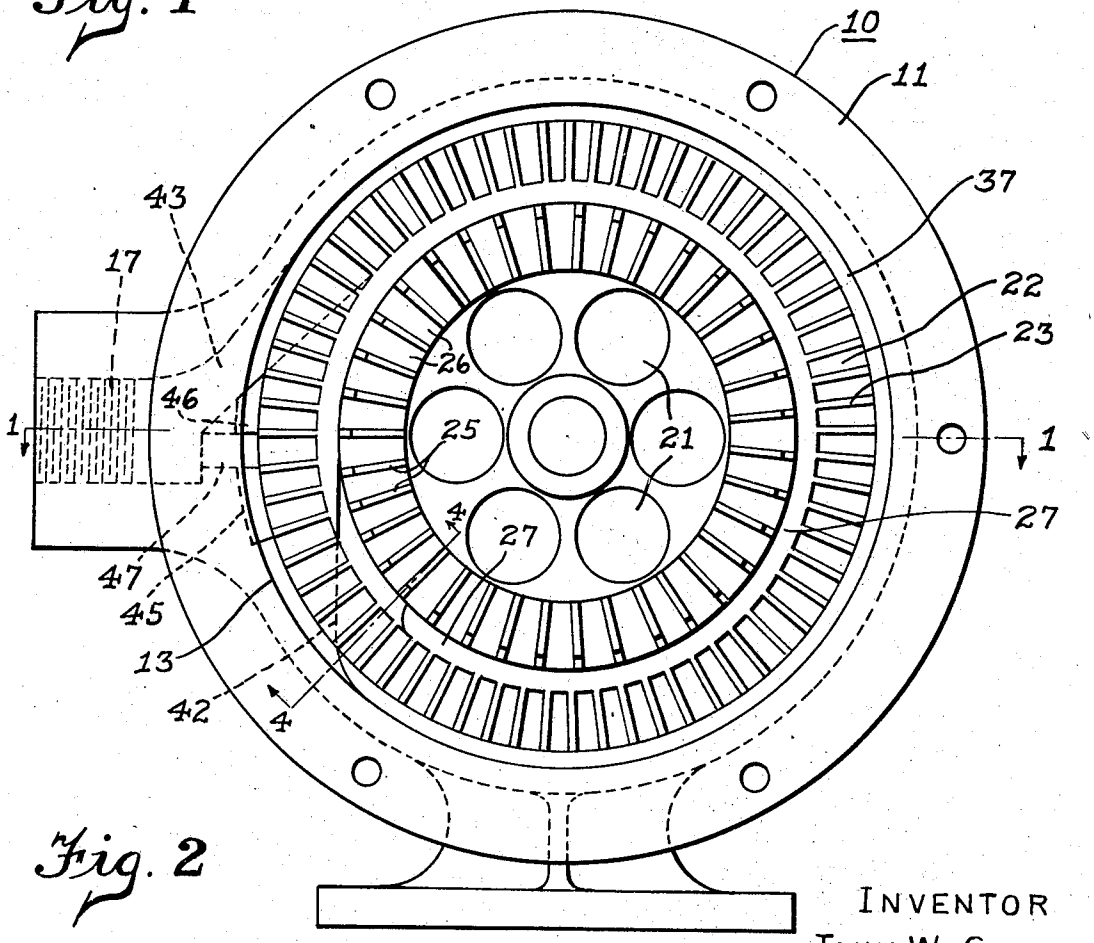

Fig. 2

INVENTOR
JOHN W. GURLEY

BY
ATTORNEY

June 15, 1943. J. W. GURLEY 2,321,810

ROTARY PUMP

Filed Sept. 8, 1941 3 Sheets-Sheet 2

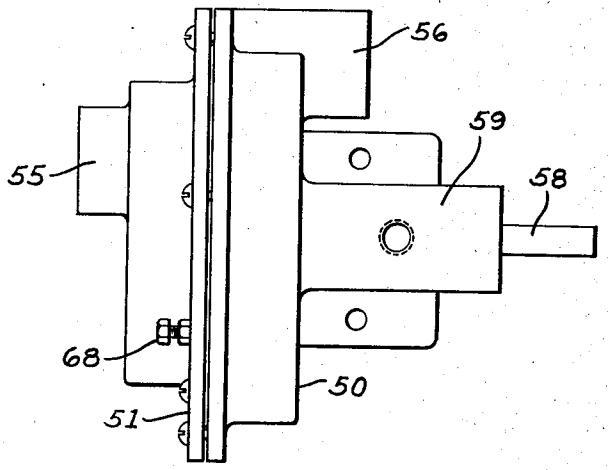

Fig. 5

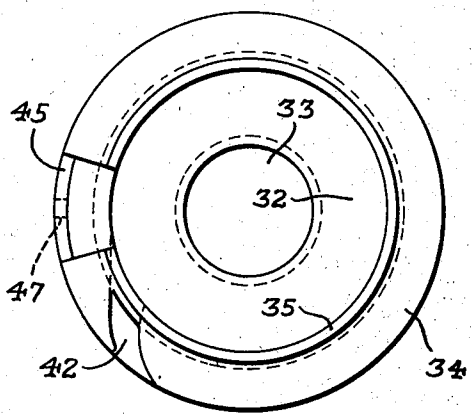

Fig. 3

Fig. 4

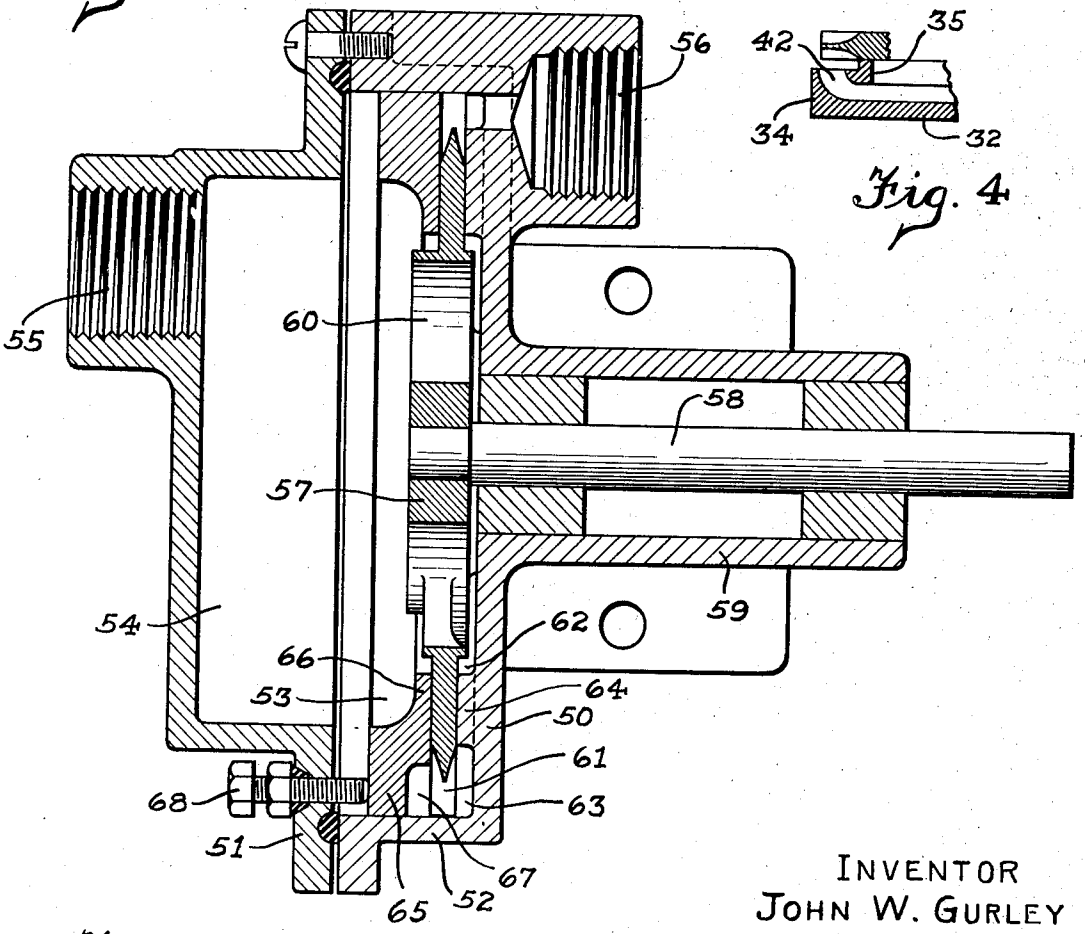

Fig. 6

INVENTOR
JOHN W. GURLEY
BY Edward Rood
ATTORNEY

June 15, 1943. J. W. GURLEY 2,321,810

ROTARY PUMP

Filed Sept. 8, 1941 3 Sheets-Sheet 3

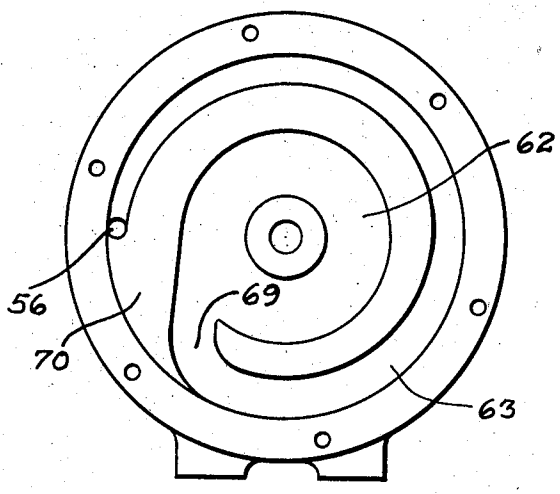

Fig. 7

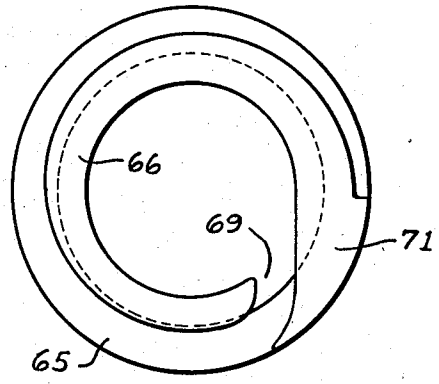

Fig. 8

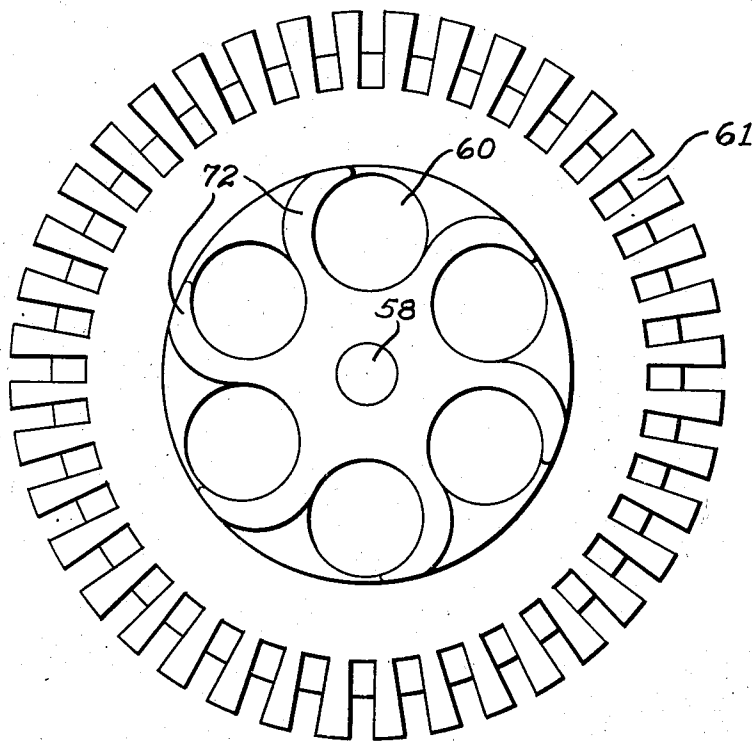

Fig. 9

INVENTOR
JOHN W. GURLEY

BY [illegible]
ATTORNEY

Patented June 15, 1943 2,321,810

UNITED STATES PATENT OFFICE

2,321,810

ROTARY PUMP

John W. Gurley, Indianapolis, Ind.

Application September 8, 1941, Serial No. 409,923

12 Claims. (Cl. 103—113)

This invention relates to rotary pumps and more particularly to that type of pump in which a disk-like impeller is provided with one or more annular series of openings or vanes forming pockets which rotate between channels formed in the side walls of the work chamber to move the fluid from the inlet through said channels to the outlet.

One object of the invention is to provide such a pump of a simple construction which will be highly efficient in operation.

A further object of the invention is to provide such a pump which can be manufactured and maintained at low cost.

A further object of the invention is to provide a three stage pump without materially increasing the size of the pump, the number of moving parts required or the cost of construction and maintenance as compared with the two stage pump.

A further object of the invention is to provide a pump of this type with means for automatically priming the same.

Other objects of the invention may appear as the invention is described in detail.

In the accompanying drawings Fig. 1 is a section taken on the line 1—1 of Fig. 2; Fig. 2 is a section taken on the line 2—2 of Fig. 1, with the annular ring removed to show the impeller in side elevation; Fig. 3 is a detail elevation of the adjustable ring; Fig. 4 is a section taken through the adjustable ring on the line 4—4 of Fig. 2; Fig. 5 is a side elevation of a modified form of the pump; Fig. 6 is a sectional view taken concentrically through the pump of Fig. 5; Fig. 7 is an elevation of the inner side of one side wall of the pump of Fig. 6; Fig. 8 is an elevation of the inner side of the adjustable ring of Fig. 6; and Fig. 9 is an elevation of the impeller of Fig. 6.

In these drawings I have illustrated the preferred form of my pump and a modified form thereof but it is to be understood that these forms are shown for the purposes of illustration only and that the invention, as a whole or in part, may be embodied in pumps of various constructions.

In the preferred form of the invention, as shown in Figs. 1 to 4, the pump comprises a casing 10 having side walls 11 and 12 and a peripheral wall 13, here shown as integral with the side wall 11 and to the edge of which the side wall 12 is secured, as by screws 14. These walls form within the casing a circular work chamber 15 and the side wall 12 is provided with an axial inlet 16 with which a suction pipe may be connected, and the peripheral wall 13 is provided with an outlet 17 with which a service pipe may be connected.

A shaft 18 is rotatably mounted in a bearing 19 carried by the side wall 11 and an impeller 20 is rigidly secured to the inner end of the shaft 18 for rotation in the work chamber 15. This impeller is provided adjacent its axis of rotation with an inner annular series of pockets 21, which, in the present instance, are formed by circular holes extending through the impeller, and has at or adjacent to its periphery an outer annular series of pockets 22, which are preferably formed by spaced vanes 23. In the construction shown in Figs. 1 and 2 the impeller is of a diameter slightly less than the diameter of the work chamber and the outer series of pockets 22 is divided by a circumferential partition 24 so as to provide in effect two outer series of pockets, the pockets of one series being preferably staggered with relation to the pockets of the other series. However, the pockets of this outer series may be of any suitable character and may, for example, extend entirely through the peripheral portion of the impeller, as shown in Fig. 9. The impeller is also provided between the inner and outer series of pockets with two annular series of vanes 25 projecting laterally from the respective sides thereof, and the vanes of each series are spaced apart to form between them an intermediate series of pockets 26. The outer portions of the vanes 25 project laterally from the body of the impeller a greater distance than do the inner portions thereof and the lateral edges of the vanes and inner walls of the pockets are curved inwardly. The intermediate vanes 25 are spaced radially from the outer series of vanes 22 and the body of the impeller is provided between the two series of vanes with oppositely facing annular contact surfaces 27.

Annular members are arranged on each side of the impeller to engage the respective contact surfaces 27 of the impeller and to divide the work chamber into inner and outer channels. When these members are formed rigid with the side walls of the casing, as is customary in pumps of this type, the members must conform to very exact dimensions in order to have proper running contact with the impeller when the side walls of the pump are secured one to the other. This calls for precision work which adds greatly to the cost of manufacturing the pump and also makes it difficult to restore a proper running contact between the impeller and the annular member when the spacing between the members has been increased by wear. In the construction illustrated one of the annular members is made adjustable with relation to the other and means are provided for effecting this adjustment after the pump has been assembled, thereby enabling the proper running contact between the impeller and the annular members to be effected after the pump has been assembled and thus eliminating a very large part of the precision work which is usually necessary and facilitating the

maintenance of the proper running contact. As here shown, the side wall 11 of the casing has adjacent its periphery an annular member 28 extending into the chamber and here shown as an integral part of the wall 11. This member has adjacent its inner edge a laterally extending projection or flange 29 arranged to have contact with the adjacent contact surface 27 of the impeller and to thereby divide the space between the impeller and the wall 11 into an inner channel 30 and an outer channel 31. Mounted in the work chamber on that side of the impeller opposite the wall 11 is an annular member or ring 32 which has snug peripheral contact with the peripheral wall 13 but is slidable thereon in an axial direction so that it may be moved toward and from the annular member 28 on the other side of the impeller. In the present instance this annular member 32 is of substantial radial width and constitutes a major portion of the side wall of the work chamber, it being provided with a central opening 33 only slightly larger than the inner end of the inlet 16. Adjacent its peripheral edge the member 32 is thickened, as shown at 34, to provide the same with a relatively large contact with the wall 13 and at the inner edge of this thickened portion it is provided with an annular flange or member 35 to engage the adjacent contact surface 27 of the impeller and to form between the outer portion of the ring and the impeller an outer channel 36 which is connected with the other outer channel 31 by a transverse space 37 beyond the periphery of the impeller, so as to constitute in effect a single outer channel. The space on the inner side of the thickened portion 34 of the ring 32 forms an inner channel which communicates with the inner channel 30 on the other side of the impeller through the openings or pockets 21.

The annular member or ring 32 may be adjusted with relation to the annular member 31 in any suitable manner and, in the present instance, adjusting screws 38 are mounted in screw threaded openings in the side wall 12 of the casing and contact the adjacent side of the ring 32. Preferably the wall is provided with bosses 39 through which the screws extend and the opening through each boss is flared at its outer end to receive a suitable packing 40, such as lead, this packing being in the form of a hollow frustum of a cone and of an initial axial length slightly greater than the flared portion of the opening so that it may be engaged by a locking nut 41 and pressed tightly into the enlarged portion of the opening.

The outer channels 31 and 36 are connected with the inner channels by openings formed through the members 28 and 34, as shown at 42 in Figs. 2 and 4, and with the outlet 17. The discharge ends of the outer channels are connected with a discharge passage leading to the outlet 17, as shown at 43, and are preferably tapered. Just beyond the discharge passage the outer channels are closed by abutments which are preferably formed by increasing the width of the members 28 and 34, as shown at 44 in Fig. 1, and providing the ring or annular member 32 with a projection 45 extending across the peripheral edge of the impeller and into a recess in the member 28. Thus the space between the members 28 and 32 at this point is of a width just sufficient to permit the rotation of the impeller and the impeller will carry past the abutments only such fluid as lies within the pockets and the remaining portion of the fluid in the outer channel will be diverted to the outlet.

In the operation of the pump the inner pockets 21 will draw the fluid through the inlet 16 and move the same through both inner channels at a substantial velocity. The fluid as it is advanced by the pockets 21 moves outwardly and enters the pockts 26 of the intermediate series which impart increased velocity thereto due to the fact that the intermediate series of pockets, being spaced from the axis of rotation a greater distance, rotate at a speed higher than the speed of the inner series of pockets. With this increased velocity the fluid is discharged through the passages 42 to the outer channel and by slightly tapering these passages the velocity of the fluid may be further increased. As the fluid enters the outer channels it is received in the outer series of pockets and its velocity further increased due to the higher speed of rotation of the outer series of pockets. This high velocity is further increased as the fluid is discharged to the outlet 17, through the tapered discharge passage 43. It will thus be apparent that the pump constitutes in effect a three stage pump and operates at a high efficiency.

The pump is also provided with very simple means for automatically priming the same. As shown more particularly in Fig. 2, the discharge passage 43 enters the outlet at one side thereof and the inner end of the outlet at the other side thereof is partially closed by a projection 46 integral with the peripheral wall 13, this projection overhanging the projection or lug 45 on the ring 32. An opening 47 extends through the projections 46 and 45 so as to connect the outlet with the outer series of pockets in the impeller. The discharge passage 43 is so arranged with relation to the opening 47 that the fluid passes at high velocity from the discharge passage to the outlet 17 beyond the opening 47, fills the outlet and tends to create an outward suction through the opening, thus preventing the flow of any appreciable quantity of fluid from the outlet through the opening to the outer pockets of the impeller. Should the supply of fluid to the pump be exhausted or other wise interrupted while the impeller continues to operate, there will, of course, be no discharge of fluid through the discharge passage sufficient to prevent the back flow of the fluid in the outlet, and the fluid in the outlet, and in the service line connected therewith, will flow by gravity through the opening 47 into the outer pocket and will be carried by the impeller through the outer channels to fill the latter. So long as the supply of fluid is interrupted the fluid which thus enters the channels will be circulated repeatedly through the channels to the outlet and back to the channels until such time as the supply of fluid is restored and, the channels then being full of fluid, will create the necessary suction to draw fluid through the inlet 16 and restore the operation of the pump. Any air which may enter the work chamber is discharged therefrom along with the water from the discharge passage 43 to the service line. Should there be any air in the outlet at the time the priming operation is initiated this air may be carried back into the work chamber along with the water from the outlet but it will not be in sufficient quantity to in any way interfere with the priming operation.

In Figs. 5 to 9 I have shown a modified form of the pump which comprises a casing having side walls 50 and 51 and a peripheral wall 52 to form within the same a work chamber 53. The wall

51 is provided with a suction chamber 54 of a diameter somewhat less than the diameter of the work chamber and which is provided with an inlet 55. The other side wall 50 is provided adjacent its periphery with a lateral outlet 56. An impeller 57 is mounted within the work chamber and secured to a shaft 58 which is journaled in a bearing 59 carried by the side wall 50. This impeller has an inner series of openings 60 arranged about its axis of rotation and constituting pockets, and also has at its periphery a series of vanes 61 spaced apart to form an outer series of pockets. In this instance the impeller has running contact with the peripheral wall 52 of the casing and the pockets of the outer series extend entirely through the impeller.

The wall 50 of the casing is provided with an inner channel 62 and an outer channel 63, these channels being formed by an inwardly extending member or rib 64 which, in the present instance, is integral with the wall 50 and which has contact with the adjacent side of the impeller between the inner and outer series of pockets. Slidably mounted within the work chamber on that side of the impeller opposite the wall 50 is an annular member or ring 65 having a part 66 adapted to have engagement with the adjacent side of the impeller between the two series of pockets. That side of the member 65 adjacent the impeller is provided in the peripheral portion thereof with an annular recess 67 which constitutes an outer channel and that portion of the work chamber on the inner side of the member 65 constitutes the inner channel. The annular member 65 may be adjusted axially in any suitable manner, preferably by adjusting screws 68 in the manner above described. The inner channels are in open communication with the suction chamber and are connected with the outer channel by passages 69, as shown in Figs. 7 and 8. The rib 64 and the part 66 of the ring 65 are provided with enlargements 70 and 71 which extend to the periphery of the work chamber and close the outer channels at points just beyond the outlet 56 and thus act as abutments to divert the fluid through the lateral outlet. The impeller is provided adjacent to the pockets 60 with laterally extending parts or vanes 72 to act on the fluid and impart a greater movement and greater velocity thereto. As shown in Fig. 9, there is a vane 72 for each opening or pocket 60 and the vane extends part way around the pocket.

While I have shown and described two forms of my invention I wish to be understood that I do not desire to be limited to the details thereof as various modifications may occur to a person skilled in the art.

Having now fully described my invention, what I claim as new and desire to secure by Letters Patent is:

1. A pump comprising a casing provided with a chamber having in each side thereof inner and outer annular channels and a passage connecting said channels, an inlet leading to said inner channels, an outlet leading from said outer channels, an impeller rotatably mounted in said chamber and having inner and outer series of pockets communicating respectively with said inner and outer channels to draw fluid through said inlet and discharge the same through said outlet, and means carried by said impeller and operating in said inner channels to increase the velocity of said fluid as it passes from said inner channels to said outer channels.

2. A pump comprising a casing provided with a chamber having in each side thereof inner and outer annular channels and a passage connecting said channels, an inlet leading to said inner channels, an outlet leading from said outer channels, an impeller rotatably mounted in said chamber and having inner and outer series of pockets communicating respectively with said inner and outer channels to draw fluid through said inlet and discharge the same through said outlet, and annular members carried by said impeller, extending into the respective inner channels radially beyond said inner pockets and having means for increasing the velocity at which the fluid is delivered from said inner channels to said outer channels.

3. A pump comprising a casing provided with a work chamber having an inlet and an outlet, annular members in the respective sides of said chamber having opposed parts to receive between them an impeller and to provide said chamber on each side of said impeller with an inner channel communicating with said inlet and an outer channel communicating with said inner channel and with said outlet, and an impeller rotatably mounted in said chamber and having a running fit between the opposed parts of said annular members, said impeller having an annular series of openings therethrough communicating with said inner channels, an annular series of pockets adjacent the periphery thereof communicating with the outer channels, and an intermediate annular series of pockets communicating with said inner channels between said series of openings and said opposed parts of said annular members.

4. A pump comprising a casing provided with a work chamber having an inlet and an outlet, annular members in the respective sides of said chamber having opposed parts to receive between them an impeller and to provide said chamber on each side of said impeller with an inner channel communicating with said inlet and an outer channel communicating with said inlet and an outer channel communicating with said inner channel and with said outlet, and an impeller rotatably mounted in said chamber and having a running fit between the opposed parts of said annular members, said impeller having an annular series of openings therethrough communicating with said inner channels, an annular series of pockets adjacent the periphery thereof communicating with the outer channels, and also having parts arranged radially beyond said series of openings and extending laterally into said inner channels to impart increased velocity to the fluid moving through said inner channels.

5. A pump comprising a casing provided with a work chamber having an inlet and an outlet, annular members in the respective sides of said chamber, having opposed parts to receive between them an impeller and to provide said chamber on each side of said impeller with an inner channel communicating with said inlet and an outer channel communicating with said inner channel and with said outlet, and an impeller rotatably mounted in said chamber and having a running fit between the opposed parts of said annular members, said impeller having an annular series of openings therethrough communicating with said inner channels, an annular series of pockets adjacent the periphery thereof communicating with the outer channels, and annular members carried by the respective sides of said impeller, extending into said inner channels radially beyond said series of openings and having spaced vanes to form between them pockets.

6. A pump comprising a casing provided with a work chamber having an inlet and an outlet, annular members in the respective sides of said chamber having opposed parts to receive between them an impeller and to provide said chamber on each side of said impeller with an inner channel communicating with said inlet and an outer channel communicating with said inner channel and with said outlet, and an impeller rotatably mounted in said chamber and having a running fit between the opposed parts of said annular members, said impeller having an annular series of openings therethrough communicating with said inner channels, an annular series of pockets adjacent the periphery thereof communicating with the outer channels, and annular members carried by the respective sides of said impeller, extending into said inner channels radially beyond said series of openings and having spaced vanes to form between them pockets, said last mentioned annular members having snug running contact with the first mentioned annular members.

7. In a pump, a casing having side and peripheral walls to form within said casing a work chamber having an inlet and an outlet, an impeller rotatably mounted in said chamber and having inner and outer annular series of pockets annular members arranged in said chamber on opposite sides of said impeller to engage the respective sides of the latter between said inner and outer series of pockets and provide inner and outer channels communicating with the respective series of pockets, one of said annular members being axially adjustable, said chamber having an inlet communicating with said inner channels and a peripheral outlet communicating with said outer channels, abutments in said outer channels just beyond the points of connection of said outer channels with said outlet, a part carried by said adjustable annular member and extending across said impeller and between the same and the peripheral wall of said chamber and cooperating with said abutments to close the spaces between said impeller and the walls of said outer channels, and means for adjusting said adjustable annular member.

8. In a pump, a casing having side and peripheral walls to form within said casing a work chamber having an inlet and an outlet, an impeller rotatably mounted in said chamber and having inner and outer annular series of pockets, annular members arranged in said chamber on opposite sides of said impeller to engage the respective sides of the latter between said inner and outer series of pockets and provide inner and outer channels communicating with the respective series of pockets, one of said annular members being axially adjustable, said chamber having an inlet communicating with said inner channels, and a peripheral outlet, said outer channels communicating with said outlet near one side of the latter, abutments in said outer channels just beyond the points of connection of said outer channels with said outlet, said adjustable annular member having a part extending through and closing the space between said outer series of pockets in said impeller and the peripheral wall of said chamber, said peripheral wall having a projection extending into the inner part of said outlet and overlying said part of said annular member, said projection and said part having alined openings leading from said outlet to the outer series of pockets in said impeller, and means for adjusting said annular member.

9. In a pump, a casing having within the same a work chamber comprising an inlet portion and a circumferential channel communicating with said inlet portion, an impeller mounted for rotation in said chamber and having adjacent the periphery thereof a circumferential series of pockets extending into said channel, an inlet leading to said inlet portion of said chamber, an outlet communicating with said channel, means for closing said channel about said impeller pockets at a point adjacent said outlet, a part of said casing having an opening leading from the inner portion of said outlet to said impeller pockets beyond said point of closure, and a discharge passage leading from said channel in advance of said point of closure to said outlet and arranged to discharge liquid across said opening and outwardly through said outlet.

10. In a pump, a casing having within the same a work chamber comprising an inlet portion and a circumferential channel communicating with said inlet portion, an impeller mounted for rotation in said chamber and having adjacent the periphery thereof a circumferential series of pockets extending into said channel, an inlet leading to said inlet portion of said chamber, an outlet communicating with said channel, means for closing said channel about said impeller pockets at a point adjacent said outlet, said casing having a part extending into the inner end of said outlet in a direction opposite the direction of rotation of said impeller and provided with an opening leading to said impeller pockets beyond said point of closure of said channel, and a discharge passage leading from said channel and entering the inner end of said outlet in advance of said part of said casing and at an angle to said outlet to cause liquid to be discharged across said opening and outwardly with relation thereto.

11. In a pump, a casing provided with a work chamber having inner and outer channels in the side walls thereof and connections between said channels, an impeller mounted for rotation in said chamber and having inner and outer series of pockets communicating with the respective channels, said chamber having an inlet leading to said inner channels and an outlet, abutments closing said outer channels adjacent said outlet, a discharge passage leading from said outer channels to said outlet in advance of said abutments and arranged to discharge liquid into said channel at an acute angle thereto, and a passage leading from said outlet directly to said outer series of impeller pockets and communicating with said outlet beyond said discharge passage and below the path of the liquid discharged into said outlet.

12. In a pump, a casing provided with a work chamber having inner and outer annular channels in the side walls thereof and connections between said channels, an impeller mounted for rotation in said chamber and having inner and outer annular series of pockets communicating with the respective channels, said chamber having an inlet leading to said inner channels and an outlet connectd at one side thereof with said outer channels, abutments closing said outer channels just beyond their points of connection with said outlet, a wall of said chamber having a projection extending across the inner end of said outlet at the other side of the latter and provided with a passage leading from said outlet to said outer series of pockets in said impeller.

JOHN W. GURLEY.