March 23, 1943. A. F. SPILHAUS 2,314,372

SEA SAMPLER

Filed April 18, 1941 2 Sheets-Sheet 1

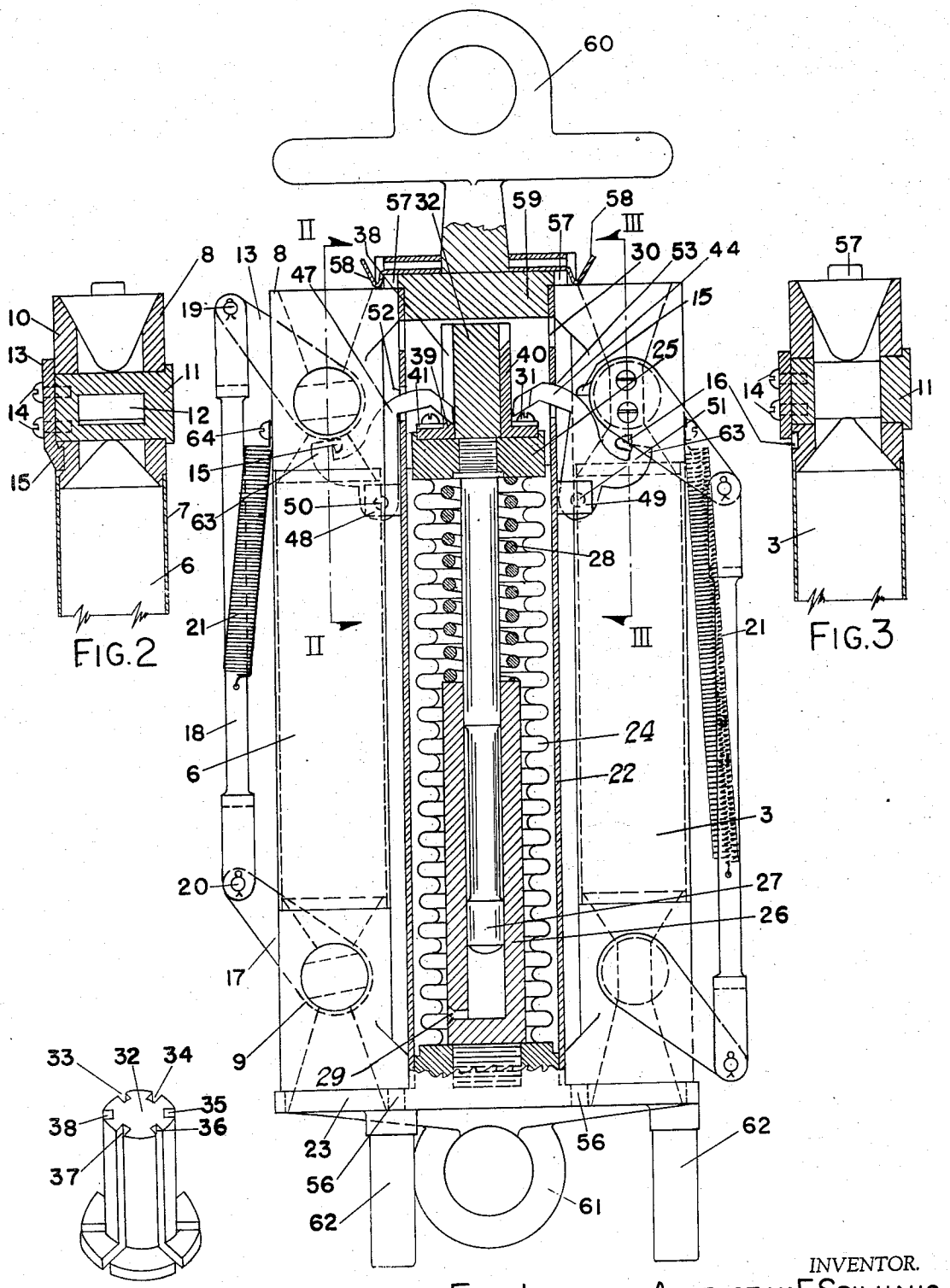

INVENTOR.
ATHELSTAN F. SPILHAUS.
BY
ATTORNEY.

March 23, 1943. A. F. SPILHAUS 2,314,372

SEA SAMPLER

Filed April 18, 1941 2 Sheets-Sheet 2

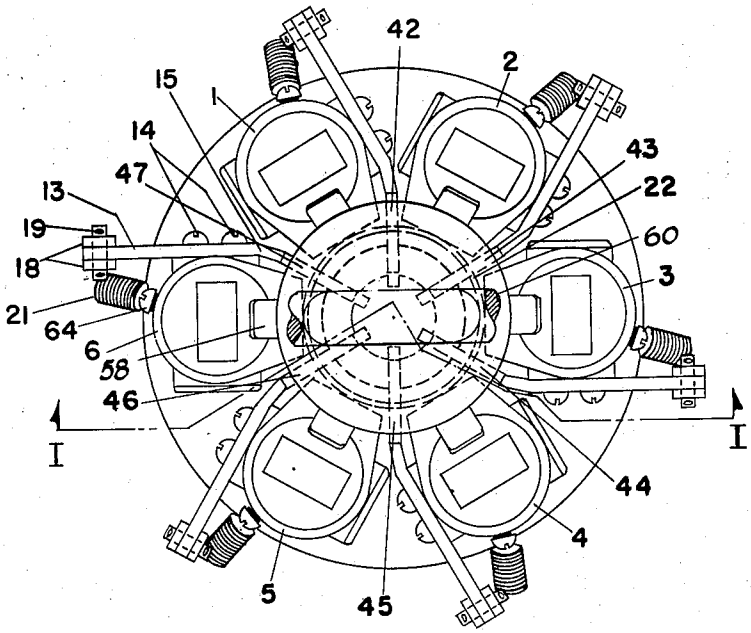

FIG. 5

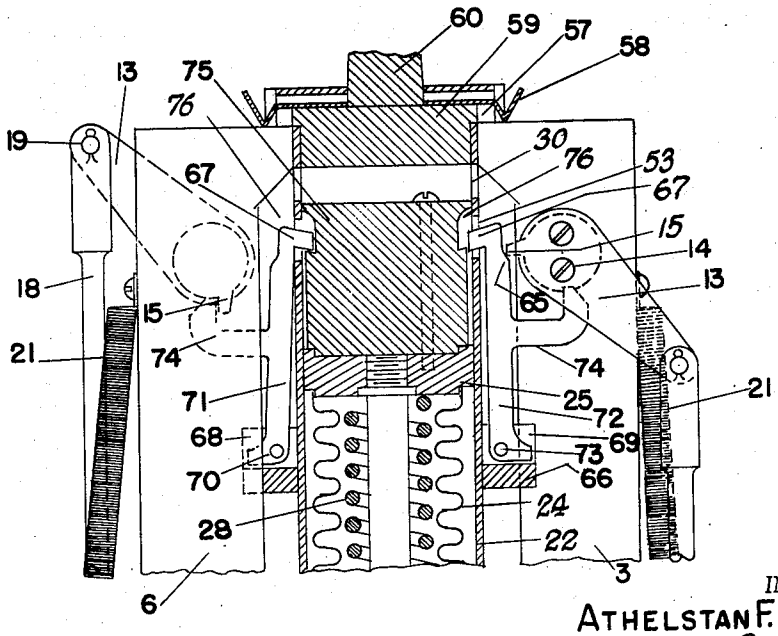

FIG. 6

INVENTOR.
ATHELSTAN F. SPILHAUS.
BY
ATTORNEY.

Patented Mar. 23, 1943 2,314,372

UNITED STATES PATENT OFFICE

2,314,372

SEA SAMPLER

Athelstan F. Spilhaus, University Heights, N. Y., assignor to Submarine Signal Company, Boston, Mass., a corporation of Maine

Application April 18, 1941, Serial No. 389,219

10 Claims. (Cl. 137—18)

The present invention relates to sea samplers, that is, apparatus for obtaining samples of sea water at various depths.

Heretofore such sea water samples have been taken by means of a plurality of water bottles fitted with stop cocks at each end and tied to a cable at suitable distances apart. The cable was then lowered from a ship into the sea. When sufficient cable had been payed out so that the lowest water bottle was at the required depth, assuming the cable to be in a vertical position, a travelling messenger was released on cable to actuate the stop cocks of the various bottles in succession, thereby closing the bottles. The cable was then hauled in and the samples of the water in the several bottles removed for laboratory inspection. Not only was this apparatus heavy and clumsy requiring the use of a large winch but also due to the angle of the cable there was no assurance that the several bottles were actually at the desired depths when the stop cocks were closed.

The present invention provides a new device for collecting samples of sea water at various depths. This device not only is simple and rapid in operation, but also insures accuracy in the taking of the samples at the required depths.

The invention will best be understood from the following description taken in connection with the accompanying drawings in which Fig. 1 shows an elevation of my apparatus in partial section along the line of I—I in Fig. 5; Fig. 2 is a section through a nearly closed valve in one of the sample-containing bottles taken along the line II—II of Fig. 1; Fig. 3 is a similar section through an open valve taken along the line III—III of Fig. 1; Fig. 4 is a perspective view of a portion of the valve-tripping mechanism; Fig. 5 is a plan view of the whole device; and Fig. 6 shows in partial section a modification of the valve-tripping mechanism of Fig. 1.

In general, my water sampler comprises a plurality of metal bottles cylindrical in shape and provided with stop cocks at each end. These bottles are grouped about a pressure-responsive element arranged in such a way that the valves of the several bottles will be closed automatically as the device is submerged at the various depths at which samples are desired.

In the construction shown in the drawings six bottles 1, 2, 3, 4, 5 and 6 are used. All of these bottles are similar. The bottle 6, for example, shown in Figs. 1 and 2, consists of a thin metal tube 7 to which are fastened at each end the valves or stop cocks 8 and 9. The several valves consist of a cylindrical member 10 having a transverse cylindrical hole in which the plug 11 of the valve turns. The plug 11 is formed with a rectangular passage 12. The ends of the member 10 are shaped to provide water flow through the plug opening 12 into and out of the tube 7 with a minimum of resistance. The valve 8 which is shown in section in Fig. 2 is shown nearly closed but the corresponding valve of the bottle 3 is shown in Fig. 3 with the valve open. The plug 11 of the valve is actuated by a lever 13 fastened to the plug 11 by screws 14.

A projection or ear 15 is formed on the lever 13. The ear 15 is bent inward slightly so that it will engage a depression 16 in the member 8, thereby forming a stop for the cock when it is in its closed position. This depression appears in Figs. 1 and 3 in the bottle 3 at 16 since the valves in this bottle are shown in open position.

The lower valve 9 of the bottle 6 is similar to the upper valve 8 just described. It is operated by a lever 17 which is similar to the lever 13 of the upper valve with the exception that it has no projection like the ear 15. Levers 13 and 17 are connected together by a rod 18 having forked ends which are pivoted in the ends of the levers, as shown at 19 and 20. A coil spring 21 is fastened by its upper end to the member 8 by screw 64 and by its lower end to the rod 18 whereby it tends to pull the rod 18 upward, thereby tending to hold the cocks in closed position.

When the instrument is immersed in the sea preparatory to obtaining water samples, the cocks are held in open position by means of a trigger mechanism which is released by a mechanism responsive to water pressure. This pressure-responsive mechanism comprises a tube 22 which is centrally disposed with reference to the six sample-collecting bottles. The tube 22 is secured at its lower end to a base plate 23 which also acts as a support for one of the ends of the sample bottles. Within the tube and also fixed to the plate 23 is a hermetically sealed metallic bellows 24 which is closed at its upper end by the plate member 25. The lower portion of the bellows contains a hollow metallic core 26 within which a guiding plunger 27 is arranged to move. Between the upper end of member 26 and the plate 25 there is provided a helical spring 28 which tends to keep the bellows in extended position. The core 26 is provided with an aperture 29 communicating with the interior of the bellows surrounding the core to permit the inspiration and expiration of air in the space within the core below the plunger 27. Apertures 30 are also provided in the cylinder 22 to permit water to enter the space between the cylinder and the bellows 24. Since the bellows can withstand relatively great transverse pressure but only small axial pressure, the water pressure acting upon the bellows tends to compress them by an amount proportional to the pressure and therefore proportional to the depth of submergence.

Fixed to the upper portion of plate 25 by means

of screws 31 is a flanged cylindrical member 32 shown in perspective in Fig. 4. Member 32 has vertical grooves 33, 34, 35, 36, 37, 38 cut in its periphery, the number of grooves being equal to the number of bottles. Held within the grooves are L-shaped members such as 39 and 40 shown in Fig. 1. These are maintained in position by means of the ring 41 which lies beneath the screws 31. The six L-shaped members are made of different lengths to correspond to the different depths at which it is desired that the valves of the water bottles shall be closed.

Positioned to bear against the L-shaped members and shaped so that they can enter the grooves in member 32 above the ends of the L-shaped members are the bent levers or pawls 42, 43, 44, 45, 46, 47, of which 47 and 44 appear in Fig. 1. In this figure the metallic bellows is shown in slightly compressed position in order that the pawl 47 may be shown as it appears when engaging the groove 38. These pawls are secured to the outside of the tube 22 by means of suitable ears such as 48 and 49, shown in Fig. 1, projecting from the tube 22 and in which the pawls are pivoted as at 50 and 51. The pawls pass through apertures in the tube 22 as at 52 and 53. The pawl members are shaped so that they will be engaged by the ears 15 on the valve levers and thereby urged into the grooves by the pressure of the ears 15. Just before the valves reach the fully closed position, the ears 15 engage hooked portions 63 formed at the ends of the pawls whereby the latter are again moved and held out of the grooves to permit free expansion of the bellows when the device is pulled out of the water.

In Fig. 1 the bottle 3 is shown with its valves open, the spring 21 being tensioned. The valve is held open by the engagement of ear 15 with pawl 44 which is bearing against L-shaped member 40. The bottle 6, on the other hand, is shown with its valves nearly closed, the pawl having moved into the groove 38 above L-shaped member 39, thereby releasing ear 15 and permitting spring 21 to close the valve. The ear 15, as shown, is now about to engage the hook 63 on pawl 47 to remove the pawl from the groove 38.

Thus, when the metallic bellows is compressed by the action of water pressure which causes the plate 25 and the member 32 to move downwards towards the bottom of the instrument as the pressure increases, one after another of the L-shaped members in the grooves 32 to 38 will pass its pawl, resulting in successive closing of the stop cocks of the various sample bottles. The water pressure and hence the depth at which the cocks of the several bottles will close is thus dependent upon the length of the L-shaped members. To change the calibration of the instrument, that is the depths at which the several bottles close, it is merely necessary to substitute differently dimensioned L-shaped members.

The bottles are held in position around the central tube 22 by being supported at the bottom by the plate 23. Pins 56 fixed to the bottoms of the several water bottles fit into suitably positioned apertures in the plate 23, thereby holding the bottoms of the bottles in position. It will also be understood that the plate 23 is provided with large apertures, one opposite each of the water bottles so that water can freely flow into the bottles. The upper ends of the bottles are formed with projecting lugs 57 which are held in position by spring clips 58 secured to a cap 59 closing the upper portion of the tube 22. Secured to the cap 59 or made integral therewith is a handle 60 whereby the instrument can be carried and lowered into the water. A ring 61 is also fitted to the bottom of the plate 23 so that a weight may be fastened to the instrument while it is being submerged if desired. The plate 23 may also be provided with feet 62 whereby the instrument may be stood up while the bottles are being removed or replaced.

It will now be evident that when samples of sea water are to be taken, all the bottles are placed in position around the central tube 22 with their valves open against the tension of the springs 21 and with the dogs 15 engaging their respective pawls, all of which will be bearing against the L-shaped members which are fitted in the grooves in the member 32. The instrument is then lowered into the sea. As soon as sufficient water pressure is reached, which is designed to occur at the desired depth at which the first sample is to be taken, the bellows will have compressed sufficiently so that the shortest of the L-shaped members will have passed its pawl permitting the latter to enter the groove above the L-shaped member and thereby permitting the spring 21 to close the cocks of that bottle. As the instrument descends into deeper depths and the pressure becomes greater, the cocks of the several bottles will be closed successively. The instrument is then drawn up to the ship where the bottles can be removed and the water samples emptied into suitable receptacles for subsequent analysis. The bottles may then be replaced in the instrument with the valves open and further samples taken.

In the modification shown in Fig. 6 a different form of valve-tripping mechanism is shown which has some advantages in that the various depths at which the valves of the several bottles are closed can be changed from the outside of the instrument. According to this modification there is mounted on the member 25, which closes the top of the bellows 24, a large block 75 which has a plurality of grooves 76 cut in its side, one for each of the water bottles. All of these grooves are of the same height. A series of links such as 71 and 72 are positioned around the outside of the cylindrical tube 22 to which they are fastened by means of a ring 66 having vertical radial flanges such as 68 and 69 to which links are pivoted as at 70 and 73. The several links are elongated vertically as shown and at their upper ends have a projection or pawl 67 which is bent inwards to pass through apertures in the tube 22. Thus, when the ear 15 of the bottle 3 presses against the shoulder 65 of the link 72, the link projection 67 will press against the member 75. The several links are also provided with outward extensions 74 which are engaged by the ears 15 just before the various valves are wholly closed, thereby pulling the shoulder 67 out of the groove 76 so that when the instrument is pulled upwards out of the water, the member 75 can move freely upwards. The various links are made of different lengths so that as the member 75 is depressed by hydrostatic pressure, the longest link will be the first to engage its groove 76, permitting the valves in the corresponding water bottle to close. The shorter links will then successively engage their grooves in the member 75, thereby successively permitting the valves of the various bottles to close. In order to change the depths at which the various bottles close, it is only necessary to substitute links of different lengths which can readily be done from the outside of the instrument.

It will be noted that the arrangement of the device is such that the angle of the wire or cable by means of which it is submerged will have no effect on its operation. Moreover, a number of samples at different depths can quickly be taken at any location and the instrument is compact and easily operated even under the adverse conditions existing on shipboard.

Having now described my invention, I claim:

1. A sea sampler comprising a plurality of water collecting bottles, each having valves adapted to be opened and closed, means for setting the valves in open position and pressure-responsive means operatively coupled to said valves for successively closing the valves of said bottles at predetermined depths as the instrument is submerged and thereafter maintaining said valves closed.

2. A sea sampler comprising a water-collecting bottle having valves adapted to be opened and closed, means for setting the valves in open position and pressure-operated means operatively connected to said valves for closing the same at a predetermined depth as the instrument is submerged and thereafter maintaining said valves closed.

3. A sea sampler comprising a plurality of water-collecting bottles, each provided with stop cocks, a metallic bellows adapted to be compressed by water pressure and means coupling said bellows to the stop cocks of said bottles to close the said cocks when the desired pressure is reached and thereafter to maintain said cocks closed.

4. A sea sampler comprising a plurality of water-collecting bottles, each provided with stop cocks, a metallic bellows adapted to be compressed by water pressure and means coupling said bellows to the stop cocks of said bottles to close the said cocks when the desired pressure is reached, said means including a spring biasing said cocks in closed position, a trigger mechanism whereby the cocks may be set in open position and means actuated by said bellows for releasing said trigger mechanism whereby the cocks are closed by said spring.

5. A sea sampler comprising a plurality of water-collecting bottles, each provided with stop cocks, a metallic bellows adapted to be compressed by water pressure and a trigger mechanism coupling said bellows to the stop cocks of said bottles to close said cocks at predetermined water depths including a member secured to said bellows and movable by compression thereof, said member having a plurality of grooves therein, a plurality of pawls each pivoted to a support fixed on the instrument and adapted to enter one of said grooves, means filling said grooves to prevent entrance of the pawls until after a predetermined degree of compression of said bellows and means responsive to entrance of a pawl into its groove for closing the cocks of one of said bottles.

6. A sea sampler comprising a plurality of water bottles having stop cocks adapted to be opened and closed, means biassing said cocks in closed position, a stepped cam having a plurality of steps corresponding to the number of water bottles, means changing the position of the cam in response to water pressure, a plurality of pawls adapted to engage the steps of said cam when the cam is in predetermined positions and means cooperating with said pawls for holding said cocks open against the action of said biassing means until the pawls engage the steps of said cam.

7. In a pressure-operated sea sampler, the combination of a substantially closed casing, pressure-operated mechanism within the casing, a plurality of water sample collecting bottles grouped around the casing, said bottles having valves adapted to be opened and closed, latch means for each of said bottles for holding said valves open until the latches are released, said latch means including a plurality of interchangeable latch-release elements of different dimensions corresponding to different predetermined latch-release pressures, means detachably mounting on the outside of said casing one of said elements for each of said latches, said elements when so mounted being adapted to extend into said casing and to be engaged by said pressure-operated mechanism within the casing for releasing the respective latches at the pressures corresponding to the said dimensions of the respective elements, whereby the pressures at which the several bottles are closed can be changed from the outside of the casing.

8. In a pressure-operated sea sampler, the combination of a cylindrical casing, a cylindrical block within the casing having a plurality of spaced lateral grooves parallel with the axis and extending only part way along the side of the block, a plurality of links of different lengths having projections at one end adapted to engage said grooves, pressure-operated mechanism within said casing for raising and lowering said block in response to changes of hydrostatic pressure, a plurality of water sample collecting bottles positioned around the outside of said casing, valve means for closing said bottles, means mounting a number of said links, one for each bottle, and of selected lengths corresponding to the depths at which it is desired to take water samples on the outside of said casing and in position to bear against the periphery of said block and to engage said grooves when the block is depressed by said pressure-operated mechanism, and means for holding the valves of each bottle open until its corresponding link engages its groove and thereupon closing said valves.

9. In a pressure-operated sea sampler, the combination of a substantially closed casing, pressure-operated mechanism within the casing, a plurality of water sample-collecting bottles grouped around the casing, said bottles having valves adapted to be opened and closed, latch means for each of said bottles for holding said valves open until the latches are released, each of said latch means including an element adapted, when actuated, to release its latch and having a dimension corresponding to a predetermined latch-release pressure and means operatively associating each of said elements with said pressure-operated means for actuation thereby when the said predetermined pressures are reached.

10. A sea sampler comprising a water-collecting bottle provided with valves adapted to be opened and closed, valve-closing means tending to hold said valves in closed position, latch means adapted when set to restrain said closing means and hold the valves in open position, and pressure-operated means adapted when a predetermined pressure is reached to release said latches, thereby freeing said valve-closing means.

ATHELSTAN F. SPILHAUS.