March 16, 1943. J. M. HOTHERSALL 2,313,750

METHOD OF LINING CAN ENDS

Filed June 15, 1940

Fig. 1

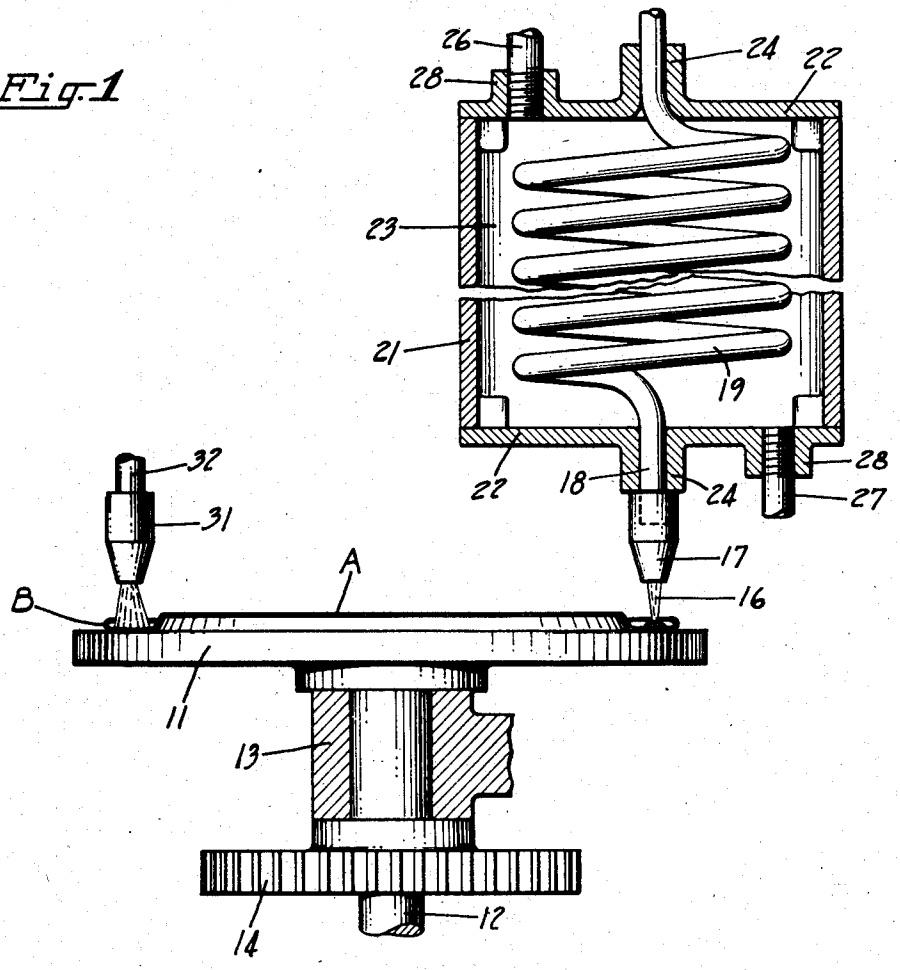

Fig. 3

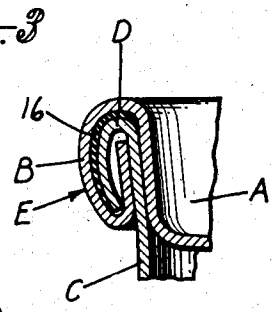

Fig. 2

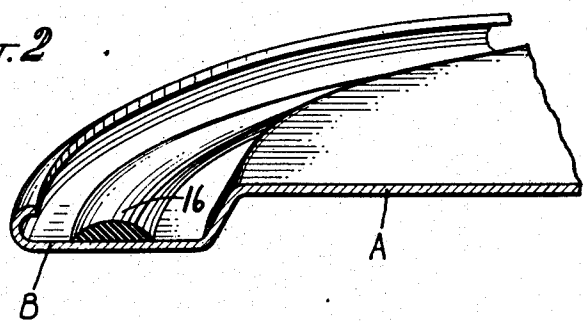

INVENTOR
John M. Hothersall
BY Dean W. Thornburgh
Charles H. Ruff
ATTORNEYS

Patented Mar. 16, 1943 2,313,750

UNITED STATES PATENT OFFICE

2,313,750

METHOD OF LINING CAN ENDS

John M. Hothersall, Brooklyn, N. Y., assignor to American Can Company, New York, N. Y., a corporation of New Jersey

Application June 15, 1940, Serial No. 340,807

2 Claims. (Cl. 113—80)

The present invention relates to a method of lining can ends and the like and has particular reference to applying a hot thermoplastic compound to the can ends.

In can manufacturing practices a common method of lining can ends includes depositing a lining compound containing solvents in the curl of the end and the solvents are then driven off by heat in a drying step prior to assembling the end with a can. The instant invention contemplates eliminating this drying operation on can ends used for certain purposes, by applying a thermoplastic compound having no solvents of a volatile character, and which congeals when applied to the can end but which also remains sufficiently in a plastic condition so that it may be readily squeezed between the parts of a seam by the heat and pressure incident to uniting the can end to a can.

An object therefore of the invention is the provision of a method of lining can ends wherein a thermoplastic compound lacking volatile solvents is applied to the can end while the compound is maintained in heated condition following which the compound is congealed but remains sufficiently plastic so that the pressure and heat of seaming the can end to the can will spread the compound throughout the end seam parts, thus eliminating any necessity of drying the compound before uniting the can end with the can.

Another object is the provision of such a method of lining can ends wherein the ends are cooled prior to application of the thermoplastic compound which is applied to a cold surface and will immediately congeal and remain in a semi-plastic condition ready for uniting the end to the can thereby eliminating drying of the compound before using the ends.

Numerous other objects and advantages of the invention will be apparent as it is better understood from the following description, which, taken in connection with the accompanying drawing, discloses a preferred embodiment thereof.

Referring to the drawing:

Figure 1 is a schematic sectional view of one form of apparatus for carrying out the steps of the instant method invention, parts being broken away;

Fig. 2 is an enlarged fragmentary sectional view of an inverted conventional can end having a thermoplastic compound applied thereto in accordance with the instant method invention; and

Fig. 3 is an enlarged sectional view of a conventional double seam uniting a compound lined can end to a can, the view showing only a portion of the can end and only a fragment of the upper end of a can.

As a preferred embodiment of the invention can ends A either at room temperature or artificially cooled to below room temperature are lined with a heated thermoplastic lining compound. The hot compound is preferably deposited in the flange curl or peripheral sealing compound groove B of the can end in a narrow substantially semi-cylindrical ribbon as shown in Fig. 2. Such a compound may be a suitable gum mixture which does not contain any solvents which need to be driven off by heat in order to dry and condition the compound for use.

One form of compound which is sometimes used contains 54 percent pontianac gum mixed, 35 percent of number 16 castor oil, 1 percent Titanox, and 10 percent glycerine.

Another form of compound contains 65 percent pontianac gum mixed, 19 percent of number 16 castor oil, 3 percent of castor oil and Titanox mixed, and 13 percent of AA castor oil.

Still another form of compound contains 60 percent pontianac gum mixed, 17 percent of number 16 castor oil, 3 percent of castor oil and Titanox mixed, and 20 percent of AA castor oil

One form of apparatus for carrying out these steps of lining the can ends in accordance with the instant method includes a rotatable table 11 which supports a can end to be lined, the end being in an inverted position so that the flange curl faces upwardly. This table is preferably carried on the upper end of a vertical shaft 12 journaled in a bearing 13. Adjacent the bearing the shaft carries a gear 14 for rotating the table. This gear may be revolved in any suitable manner in time with the other moving parts of the apparatus.

As the can end A rotates with the table 11 the thermoplastic compound indicated by the numeral 16 is ejected from a nozzle 17 disposed over the path of travel of the end flange curl B. The nozzle is connected to the lower end of a tube 18 which may be the lower end of a coil 19 receiving the compound from any suitable source of supply such as a tank or reservoir.

The coil 19 is disposed within a casing 21 having top and bottom cover plates 22 which enclose a steam chamber 23. The tube 18 of the coil extends through bosses 24 formed on the outside of the cover plates. Steam is circulated through the chamber and around the coil by way of an entrance pipe 26 and an exit pipe 27. These pipes are threaded into bosses 28

which are formed on the cover plates 22. The entrance pipe may lead from a suitable source of supply of steam and the exit pipe leads to any suitable place of discharge for the used steam. It is this steam that makes the lining compound hot while the latter flows through the coil 19. Thus as the can end rotates, a ribbon of hot thermoplastic compound issuing from the nozzle 17 is deposited in the curl B of the can end where it takes the form substantially shown in Fig. 2.

The thermoplastic nature of the compound is such that it will become of semi-plastic consistency as soon as its heat is dissipated. A can end at room temperature will cause a reasonably rapid congealing of the compound. However, this cooling action may be accelerated by further cooling the part of the can end on which the compound is deposited just before such deposit. Fig. 1 shows such a cooling step. While the can end rotates, the curl B opposite the position of lining is cooled by compressed air which is discharged from a nozzle 31 located over the path of travel of the curl. This nozzle is connected to a pipe 32 which leads to any suitable source of supply of compressed air.

The hot thermoplastic compound received on the cool curl B of the can end immediately congeals but remains in semi-plastic condition without any drying operation being performed thereon. The lined can ends may thus be immediately attached to cans or may be stored away or shipped for future use as desired.

Such a lined can end when made of metal is usually secured to a can C (Fig. 3) in a double seam, a flange D of the can being interfolded with the can end curled flange in the usual manner. This interfolding is preferably done by a seaming roller and there results a double seam E which is hermetic. During this seaming operation considerable pressure is exerted on the flange parts and some heat is generated and such heat and pressure spreads the congealed compound and squeezes it throughout the seam parts thereby producing the fully hermetic joint.

Such a thermoplastic compound may be equally well used on fibre cans where false or full double seaming or crimping is used in the joints. Experiments along these lines have proved very satisfactory, there being very little heat needed to soften the compound during the seaming operation and no drying step is required as in the case of a compound having solvents.

It is thought that the invention and many of its attendant advantages will be understood from the foregoing description, and it will be apparent that various changes may be made in the steps of the process described and their order of accomplishment without departing from the spirit and scope of the invention or sacrificing all of the material advantages, the process hereinbefore described being merely a preferred embodiment thereof.

I claim:

1. A method of lining can ends comprising flowing in molten form a thermoplastic lining compound containing no volatile solvents in the form of a relatively narrow raised ribbon to the flange portion of a can end while cooling said end for the reception of said compound thereon, the compound being adapted immediately to congeal and thereafter remain in a sufficiently plastic condition to spread and incorporate itself into a can and seam joint solely under the heat and pressure developed by the operation of seaming the end so lined to a can body, whereby to eliminate the necessity of first applying heat or otherwise evaporating volatile solvents in the lining compound prior to seaming the end so treated to the can body in a hermetic joint.

2. A method of lining can ends and securing the same to a can body in a hermetic joint, comprising flowing in molten form a thermoplastic lining compound containing no volatile solvents in the form of a relatively narrow raised ribbon directly on the flange portion of a can end while cooling said flange portion for the reception of said compound thereon, the compound being adapted immediately to congeal and thereafter remain in a sufficiently plastic condition to spread and incorporate itself into a can end seam joint solely under the pressure and heat developed by the operation of seaming the end so lined to a can without the necessity for first applying heat or otherwise driving off and evaporating volatile solvents in the lining compound, placing said lined can end onto the flange of a can to be closed, and uniting said can and said can end in a seamed joint by exerting pressure on said flanges to produce an interfolded end seam containing said compound, said pressure and heat developed by the seaming operation serving to spread said compound throughout the folds of said seam to constitute a hermetic joint.

JOHN M. HOTHERSALL.