Nov. 17, 1942. F. J. SCHIRM 2,302,061

GAS INDICATOR APPARATUS

Filed Nov. 2, 1939 4 Sheets-Sheet 1

Fig. 1.

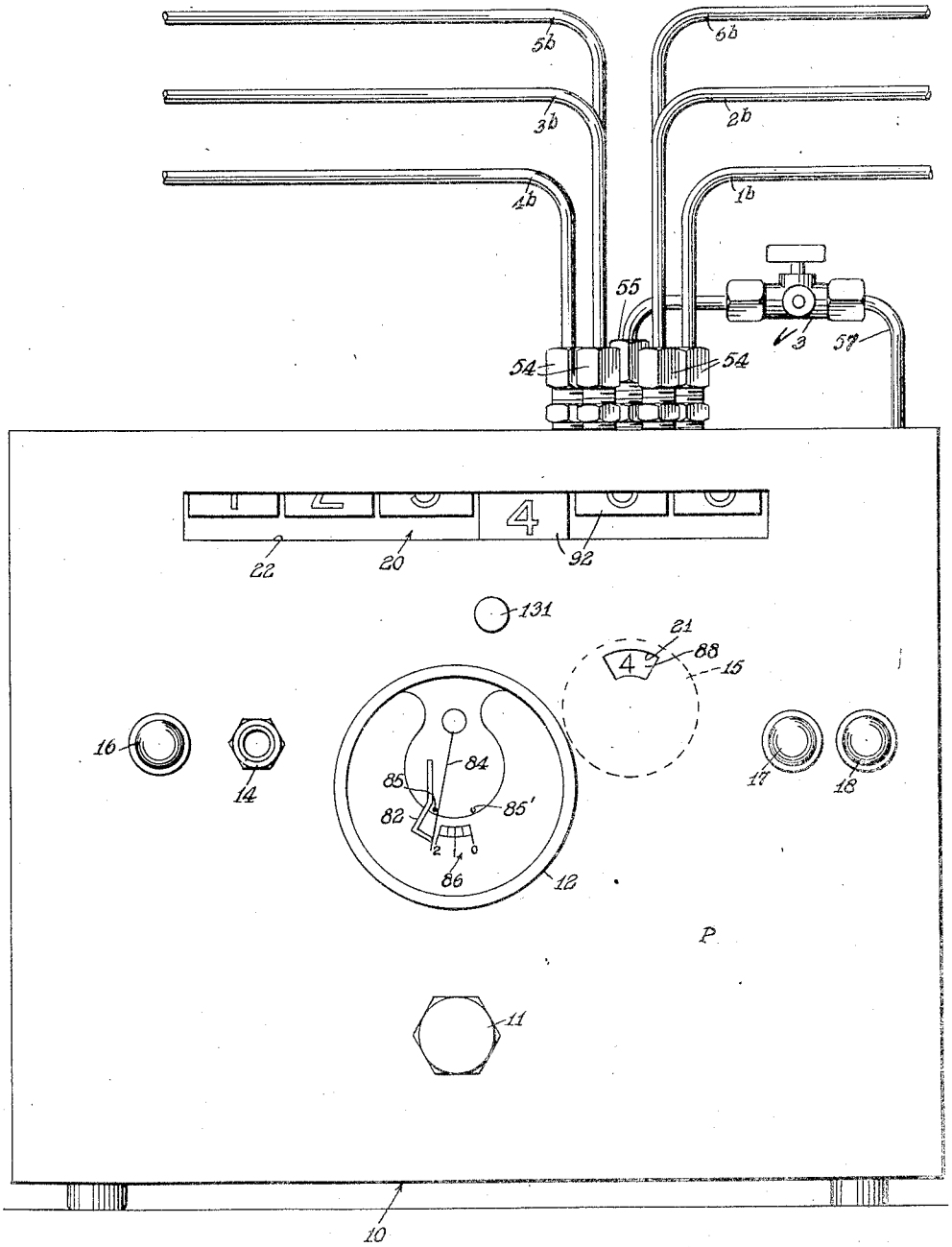

INVENTOR.
Frederick J. Schirm
BY
Williams, Rich & Morse
ATTORNEYS

Nov. 17, 1942. F. J. SCHIRM 2,302,061

GAS INDICATOR APPARATUS

Filed Nov. 2, 1939 4 Sheets-Sheet 2

Fig. 2.

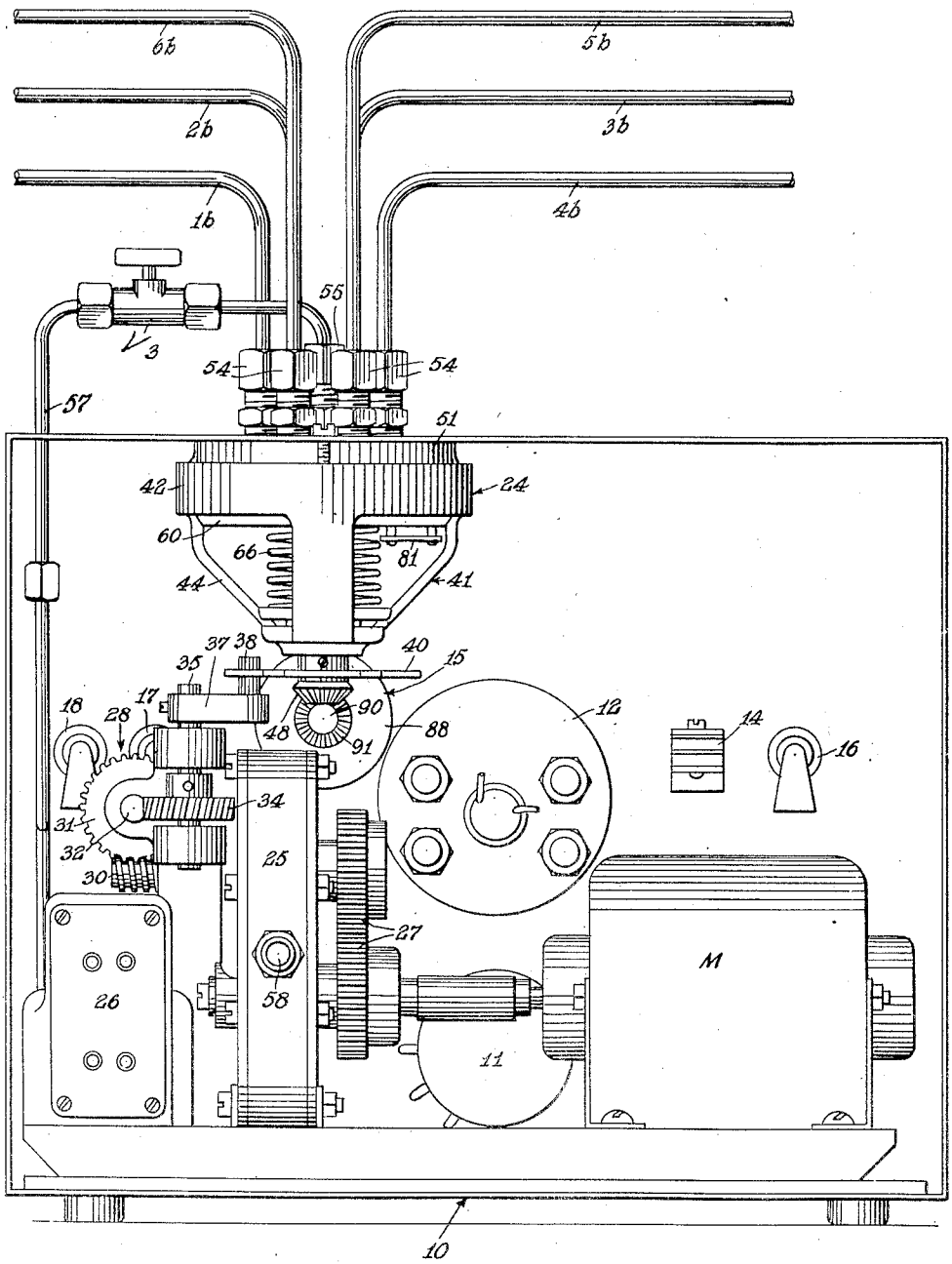

INVENTOR.

BY Frederick J. Schirm
Williams, Rich & Morse
ATTORNEYS

Nov. 17, 1942. F. J. SCHIRM 2,302,061

GAS INDICATOR APPARATUS

Filed Nov. 2, 1939 4 Sheets-Sheet 3

Fig. 3.

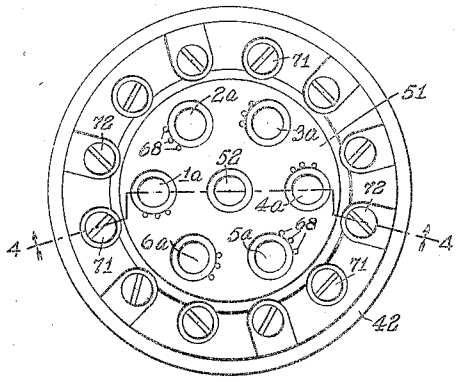

Fig. 4.

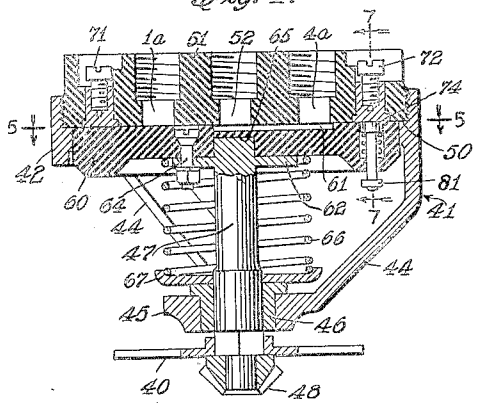

Fig. 5.

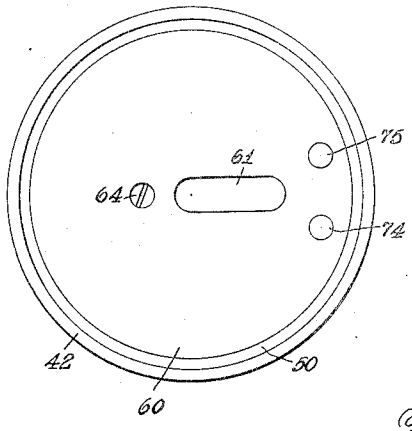

Fig. 6.

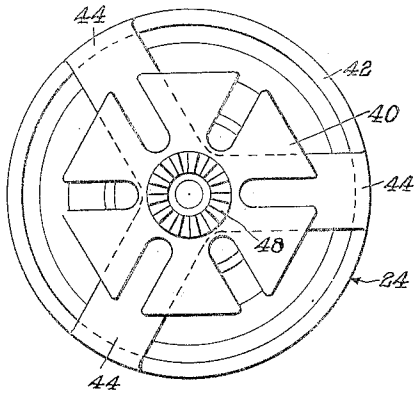

Fig. 7.

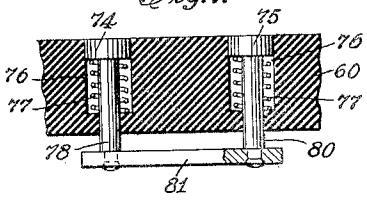

INVENTOR.
Frederick J. Schirm
BY Williams, Pick & Murse
ATTORNEYS

Nov. 17, 1942. F. J. SCHIRM 2,302,061

GAS INDICATOR APPARATUS

Filed Nov. 2, 1939 4 Sheets-Sheet 4

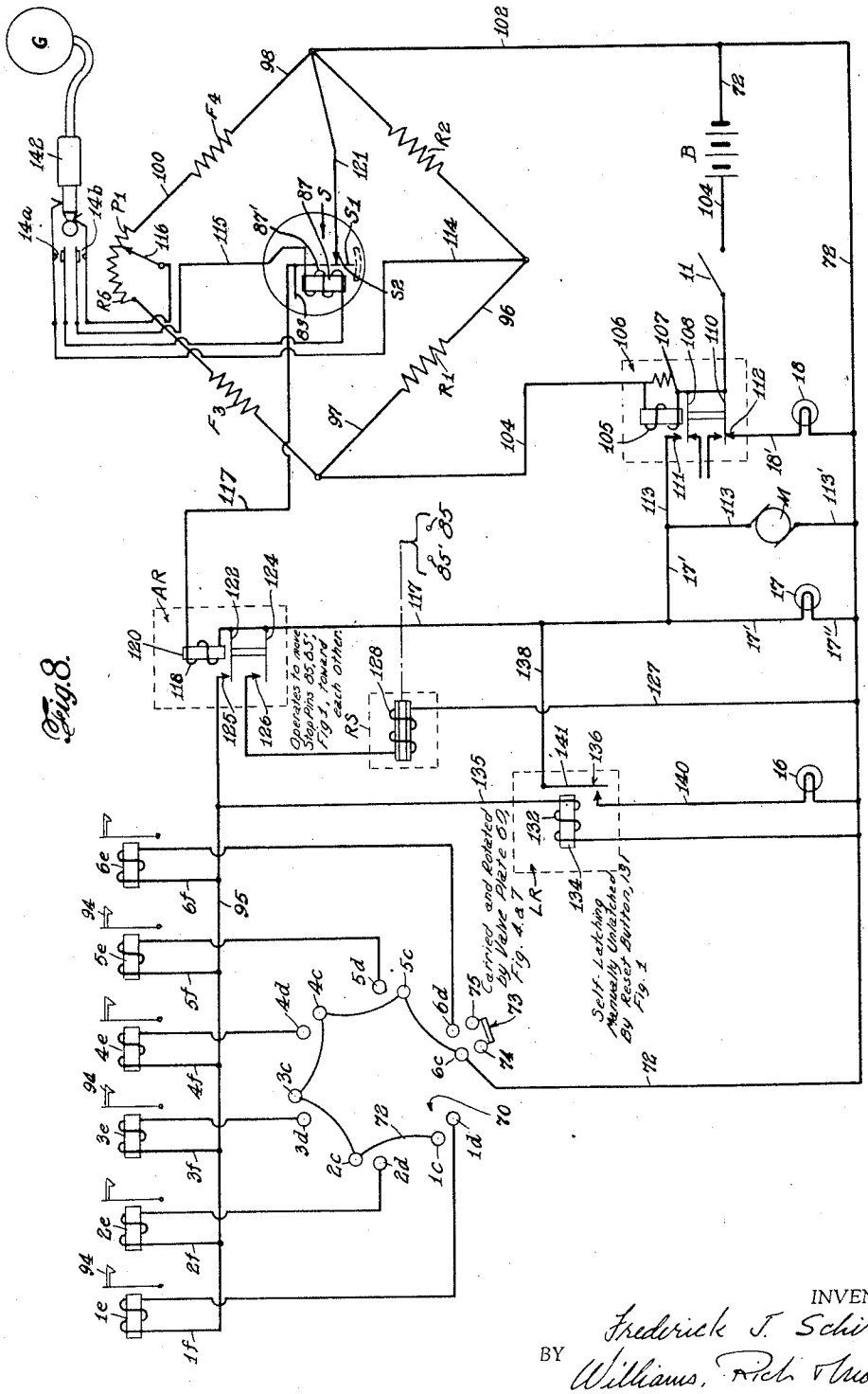

Fig. 8.

INVENTOR.
Frederick J. Schirm
BY Williams, Rich & Morse
ATTORNEYS

Patented Nov. 17, 1942 2,302,061

UNITED STATES PATENT OFFICE

2,302,061

GAS INDICATOR APPARATUS

Frederick J. Schirm, Hoboken, N. J., assignor to Davis Emergency Equipment Company, Incorporated, New York, N. Y., a corporation of New York

Application November 2, 1939, Serial No. 302,480

1 Claim. (Cl. 23—255)

This invention relates to gas-indicator apparatus adapted to announce at a central station the existence of an abnormal gas condition at one of or at any number of a plurality of outlying stations.

Although the invention is adapted for use in various instances where it is essential in the interest of the preservation of life and property that a prompt and reliable indication be given as to the existence of an abnormal gas condition at one or at any number of a plurality of stations, the invention is herein illustrated as embodied in an apparatus which is especially designed for use in connection with airplanes and adapted to so function as to enable the flight engineer or other designated member of the crew to be kept advised as to the gas condition at various outlying stations in the airplane where the accumulation of gasoline vapors are deemed most likely to occur.

An important object of the present invention is to so improve apparatus of the character to which the invention relates as to justify the placing of complete confidence in the indications afforded by such apparatus regarding gas conditions at the respective outlying stations.

Other objects and advantages of the invention will become apparent from the following description when taken in connection with the accompanying drawings, in which—

Fig. 1 is a front elevation of an apparatus embodying the present invention;

Fig. 2 is a rear view of the apparatus showing various parts thereof in elevation;

Fig. 3 is a plan view of a rotary valve unit;

Fig. 4 is a sectional view taken on line 4—4 of Fig. 3;

Fig. 5 is a sectional view taken on line 5—5 of Fig. 4;

Fig. 6 is a bottom view of the rotary valve unit;

Fig. 7 is an enlarged fragmental sectional view taken on line 7—7 of Fig. 4, and

Fig. 8 is a diagrammatic view showing the various circuits of the apparatus.

For the sake of convenience the various units and instrumentalities entering into the apparatus are for the most part housed within a suitable cabinet 10, the front wall of which serves as an instrument panel P with which are associated a control switch 11, a relay meter 12, a jack unit 14 (which includes a pair of normally closed switches 14*a* and 14*b* diagrammatically shown in Fig. 8), an index unit 15, a plurality of signal lamps 16, 17, 18, and an annunciator unit 20, the index unit 15 and the annunciator unit 20 being disposed rearwardly of and adjacent to suitable windows 21 and 22 formed in the panel.

As shown most clearly in Fig. 2, the cabinet 10 houses a valve unit 24, a suction pump 25, an electric motor M and a suitable combustion chamber unit 26 such as that shown, described and claimed in United States Patent No. 2,231,166, granted to Elmer L. Knoedler, Jr., February 11, 1941. The pump 25 is of conventional design having a pair of rotors (not shown) which are operatively connected together by a pair of gears 27 and are driven by the motor M. With the pump 25 there is associated a gear-reduction unit 28 which includes a worm 30 suitably connected to one of the pump rotors and meshing with a worm gear 31, with which is associated a worm 32 meshing with a worm gear 34 carried by a vertically disposed shaft 35, which is driven at a relatively slow speed and to the upper end of which is connected an arm 37 having at one end a vertically disposed cam pin 38 adapted to effect step-by-step rotation of a slotted cam plate 40 associated with the valve unit 24 and serving, in conjunction with its co-operatively related cam pin, as a Geneva movement by which is attained the desired operation of the valve unit 24.

The valve unit 24 comprises, particular reference being had to Fig. 4, a frame-like structure 41 which includes an annular or sleeve-like body 42, from which extend downwardly and inwardly a plurality of arms 44, by the lower ends of which are carried a hub-like web 45 provided with a suitable bearing 46, within which is journalled a shaft 47 to which the slotted cam plate 40 is connected and to which there is also connected a bevelled gear 48, the function of which will hereinafter more clearly appear. The sleeve-like body 42 is provided interiorly thereof with an annular shoulder 50 adapted to receive thereon a hard-rubber port plate 51, which is adapted to be screwed into the sleeve-like body 42 and there held against displacement on the annular shoulder 50. The plate 51 is provided with an outlet port 52 and a plurality of inlet ports 1*a*, 2*a*, 3*a*, 4*a*, 5*a* and 6*a*. The ports 1*a*—6*a* inclusive are disposed in an annular group about the port 52 and are adapted to be progressively placed in communication therewith incident to intermittent operation of the valve unit 24, as will hereinafter more clearly appear. The port plate 51 is provided with a plurality of pipe couplings 54 by which a series of tube-like inlet conduits 1*b*, 2*b*, 3*b*, 4*b*, 5*b* and 6*b* are connected to the port plate 51 and maintained in communication with

the respective inlet ports 1a—6a inclusive. The tube-like conduits 1b—6b, although only fragmentally shown herein, lead to various outlying stations in the airplane where the accumulation of gasoline vapors are deemed most likely to occur. The port plate 51 is also provided with a pipe coupling 55, which communicates with the outlet port 52 and by which a tube-like delivery conduit 57 is connected to the port plate and maintained in communication with the outlet port 52. The tube-like conduit 57 is in turn connected to the gas inlet port (not shown) of the combustion chamber unit 26, which, as will be readily understood, is connected by a suitable tube-like conduit (not shown) to the inlet port (not shown) of the suction pump 25, so that under certain conditions, hereinafter more particularly described, gas is drawn under the action of the suction pump through the conduit 57 and the combustion chamber unit 26, such gas being discharged from the pump by way of its exhaust port 58.

In order that the conduits 1b—6b may be successively placed in communication with the combustion chamber unit 26 by way of the conduit 57, there is associated with the port plate 51 a hard-rubber valve plate 60, a peripheral bearing for which is afforded by the sleeve-like body 42 of the frame-like structure 41, as shown most clearly in Fig. 4. The upper face of the valve plate 60 intimately engages the lower face of the port plate 51 and is provided with a radially extended groove-like channel 61, which is maintained at all times in communication with the outlet port 52 and is adapted to establish communication between that port and the respective inlet ports 1a—6a as the valve plate is intermittently rotated under the action of the shaft 47 to which the valve plate is connected. As shown most clearly in Fig. 4, the driving connection afforded between the shaft 47 and the valve plate 60 comprises an anchor flange 62 secured to the valve plate 60 by any suitable means such as a bolt 64. Preferably the shaft 47 extends upwardly beyond the flange 62 and is there accommodated within a central recess or pocket 65 formed in the lower face of the valve plate 60. In order that the valve plate 60 may be maintained in intimate face-to-face engagement with the adjacent port plate 51, a thrust spring 66 is employed. This thrust spring 66 at its upper end surrounds the anchor flange 62 and there engages the valve plate 60. The lower end of the spring 66 snugly fits within a cup-like retainer 67, which is loosely supported on the bearing 46 and through which the shaft 47 loosely passes. The anchor flange 62 and the cup-like retainer 67 effectively serve to maintain the thrust spring 66 coaxially disposed with respect to the shaft 47 and the valve plate 60, which shaft is free to move upwardly, due to the slight clearance afforded between the bearing 46 and the hub-like portion of the slotted cam plate 40, under the action of the thrust spring 66 incident to the occurrence of any gradual upward wear-compensating displacement of the valve plate 60 under the action of the thrust spring.

In order to free or purge the combustion chamber unit 26 and its associated conduit 57 of their gas content and supply them with a charge of pure air immediately prior to the examination of atmospheric conditions at the respective outlying stations, the port plate 51 is provided immediately adjacent each of the ports 1a—6a with a group of scavenging ports or apertures 68. These respective groups of apertures 68 are placed in communication with the outlet port 52 by way of the groove-like channel 61 of the rotary valve plate 60 with the result that pure air from the immediate vicinity of the apparatus (which in practice is, of course, installed or located in quarters, such as the pilot compartment of an airplane, where pure-air conditions prevail) is periodically delivered to the combustion chamber unit 26 by way of its associated conduit 57. It is to be observed in connection with the several groups of scavenging ports 68 that each such group is so located with reference to the next succeeding one of the inlet ports 1a—6a and the immediately preceding one of such ports that the combustion chamber unit is opened to the atmosphere pursuant to the completion of the examination of the atmospheric condition at one outlying station and immediately prior to such time as the examination of the atmospheric condition at the next succeeding outlying station is initiated. By way of further explanation in this connection, let it be assumed that the valve plate 60 is so moved in a clockwise direction, reference being had to Fig. 3, as to sever communication between the inlet port 4a and the outlet port 52 of the valve unit 24. Under the conditions just assumed, it will be understood that incident to severing communication between the inlet port 4a and the outlet port 52, the gaseous content of the combustion chamber unit 26 is representative of the atmospheric condition prevailing at the outlying station corresponding to the inlet port 4a at the time of making the last examination. Prior, however, to such time as communication is established between the outlet port 52 and the next succeeding inlet port 5a in order that an examination may be made of the atmospheric condition at the outlying station corresponding to that inlet port, the outlet port is placed in communication with that group of scavenging ports 68 which immediately precedes the inlet port 5a, with the result that the gaseous contents of the combustion chamber unit and its associated conduit 57 are supplanted by air admitted by way of the group of scavenging ports just mentioned and known to be pure in character. By supplying the combustion chamber unit 26 and its associated conduit 57 with pure air immediately prior to initiating an examination of the atmospheric condition at the respective outlying stations, the examination of the atmospheric condition at any given outlying station cannot be influenced by the atmospheric condition prevailing at the immediately preceding outlying station at the time the examination was carried out with respect to such preceding station.

In order that certain electrical circuits, hereinafter more particularly described and corresponding to the several outlying stations, may be closed under conditions and for the purpose hereinafter more particularly stated, the port plate 51 and valve plate 60 of the valve unit 24 are utilized respectively as the stationary element and rotatable element of a multiple switch 70 which is diagrammatically shown in Fig. 8. This switch includes a plurality of stationary contacts 1c, 2c, 3c, 4c, 5c and 6c which by means of binding posts 71 are connected to a return conductor 72 leading to a battery B, the contacts being carried by the port plate 51 and having their contact faces flush with the lower surface of that plate. Associated with the contacts 1c—6c are a plurality of similar contacts 1d, 2d, 3d, 4d, 5d and 6d which are equipped with binding posts 72

adapted to accommodate the terminals of various conductors hereinafter more particularly described. In order that the respective pairs of contacts 1c, 1d—6c, 6d may be bridged or closed successively incident to rotation of the valve plate 60, such plate is provided with a bridge unit 73 which includes a pair of plunger-like contacts 74 and 75 accommodated within pocket-like recesses 76 formed in the valve plate. These contacts 74 and 75 are normally urged upwardly under the action of a pair of compression springs 77, the upper ends of which engage the head-like portions of the contacts and the lower ends of which rest on the bottom wall of the pocket-like recesses through which extend for sliding movement the stem portions 78 and 80 of the respective contacts, the stem portions being connected together at their lower ends by a conductor plate 81. Concerning the disposition of the respective pairs of contacts 1c, 1d—6c, 6d with relation to the inlet ports 1a—4a, it will be noted that, during such time as the valve plate 60 is stationary and communication is maintained between the outlet port 52 and one of the inlet ports, the particular pair of contacts which corresponds to the inlet port then communicating with the outlet port is maintained closed by way of the contacts 74 and 75 and their associated conductor plate 81 so as to insure, as will hereinafter more clearly appear, a properly synchronized relationship between various parts of the apparatus.

Although the relay meter 12 is of conventional design, it may be well to here point out that it is equipped with a permanent magnet 82, which is adapted to exert a holding influence on the indicator needle 84 when that needle is moved in a clockwise direction to its extreme position shown in Fig. 1. The maximum swing of the needle in a clockwise direction is determined by a stop pin 85, a similar stop pin 85' being employed to limit the movement of the needle in a counter-clockwise direction. These stop pins are adapted to be moved, under certain conditions hereinafter more particularly described, toward each other by a reset solenoid RS (Fig. 8) so as to overcome the holding effect of the magnet 82 on the indicator needle 84 as it is brought to a central position with reference to an appropriately graduated indicator scale 86 with which the relay meter 12 is provided. The relay meter 12 is further characterized by the fact that its indicator needle 84 serves as a switch element S—1, which is associated with a conventional needle-actuating armature 83, or its equivalent, and is adapted when moved to its extreme position shown in Fig. 1 to engage a second switch element S—2 with which the meter is equipped. The switch elements S—1 and S—2 constituting a magnetically actuated switch S adapted to assume a closed-circuit condition when the armature 83 is moved to a definite position under the action of the operating magnet 87 of the relay meter incident to the flow of an electric current, of predetermined value, through the magnet winding 87'.

With further reference to the relay meter 12, opportunity is here taken to emphasize the fact that it is a well-known standard commercial unit which includes the permanent magnet 82, the indicator needle 84 serving as a switch element S—1, the needle-actuating armature 83, the stop pin 85, the stop pin 85', the reset solenoid RS, the switch element S—2, and the operating magnet 87.

Referring to Figs. 1 and 2, the index unit 15 includes a rotary indicator dial 88 provided at its outer margin with a series of numerals, which correspond to the respective outlying stations and are successively presented to view by way of the window 21 formed in the instrument panel P. The indicator dial 88 is carried by a horizontally disposed shaft 90, suitably supported within the cabinet 10 and provided at one end with a bevel gear 91 meshing with the bevel gear 48 secured to the lower end of the shaft 47 to which the rotary valve plate 60 is connected for step-by-step rotation under the action of the cam plate 40. Inasmuch as the index unit 15 operates in synchrony with the valve unit 24, one may readily determine at any time the position of the rotary valve plate 60 with relation to any one of the several outlying stations to which lead the tube-like conduits 1b—6b, it being understood that during such time as an examination of atmospheric conditions at any one of the several outlying stations is being carried out, the numeral carried by the indicator dial 88 and corresponding to such one station will be maintained in view by way of the window 21.

The annunciator unit 20 is herein illustrated as being of the so-called drop type, and is characterized by the fact that it includes a plurality of indicator tabs 92 which are pivotally supported for individual movement under the action of gravity from their respective retracted positions to their respective announcing positions. The indicator tabs 92 are provided with numerals corresponding to the respective outlying stations to which lead the conduits 1b—6b, the numeral of any one of the several indicator tabs being presented to full view by way of the window 22 as such tab assumes its announcing position. Normally the indicator tabs 92 are maintained in their respective retracted positions by pivotally supported latches 94 diagrammatically shown in Fig. 8. These latches constitute armatures for a series of release magnets 1e—6e and are adapted to be moved under the influence of such magnets in a counter-clockwise direction from their normal positions shown in Fig. 8 so as to release the indicator tabs 92 and thus permit them to move to their respective announcing positions. As will hereinafter more clearly appear, the magnets 1e—6e are energized under certain conditions incident to the bridging of the contacts 1c, 1d—6c, 6d, the circuits of the respective magnets including branch conductors 1f, 2f, 3f, 4f, 5f and 6f leading from a common feed conductor 95 to the respective contacts 1d—6d of the multiple switch 70.

In accordance with the present invention, an electrical circuit of the Wheatstone bridge type is employed, the circuit being characterized, as is well known, by the fact that it may be employed to indicate a change of electrical resistance in one of its parts.

In Fig. 8, a circuit of the above type is illustrated in the present embodiment of the invention as including resistances R_1, R_2, F_3 and F_4, the resistances F_3 and F_4 being in the form of, and sometimes hereinafter referred to as, filaments. The resistances R_1—R_2, R_1—F_3, R_2—F_4, and F_3—F_4 are respectively connected together by conductors 96, 97, 98 and 100, the conductors 96 and 98 being connected to the battery B by way of conductors 102 and 104 in the latter of which the control switch 11 is disposed. Also in the conductor 104 there is disposed the operating winding 105 of a bridge relay 106, in par-

allel with which winding it has been found desirable to place a fixed resistance **107**, the value of which may be determined by taking into account the electrical characteristics of the operating winding with which it is associated. The bridge relay **106** also includes a pair of movable contacts **108** and **110** which are electrically connected to the conductor **104** and are adapted to be moved simultaneously incident to energization of the operating winding **105**. Movement of the contacts **108** and **110** upon energization of the operating winding **105** causes the former of these contacts to engage its associated switch terminal **111** and the latter of these contacts to disengage its associated switch terminal **112**. At the instant the contact **108** engages its associated switch terminal **111**, a circuit is established through the motor M from one side of the battery B to the other side thereof by way of the conductor **104**, the contact **108**, the terminal **111**, a conductor **113** leading to the motor, a conductor **113'** leading from the motor and the return conductor **72** to which the conductor **113'** is connected. At the instant the circuit of the motor M is established the lamp **17**, which is preferably colored to effect green illumination, is of course energized, since it is connected across the motor circuit by way of conductors **17'** and **17''**. The motor M and lamp **17** remain energized so long as the switch **11** remains closed and so long as the bridge relay **106** is maintained energized. However, in the event either the filament F_3 or the filament F_4 burns out while the switch **11** remains closed, the circuits of the motor M and lamp **17** are opened and the circuit of the lamp **18**, which is colored to effect amber illumination, is closed by way of the conductor **104**, contact **110**, terminal **112**, conductor **18'** and conductor **72**. In this connection it is to be observed that whenever either of the filaments F_3 and F_4 burn out, the resistance then peculiar to the circuit in which the conductor **104** is included is such as to prevent the flow of sufficient current through that circuit to maintain the bridge relay **106** in closed-circuit condition with relation to the motor M and the lamp **17**. As will be readily understood from an inspection of Fig. 3, the operating winding **105** of the bridge relay **106** is energized incident to closing the switch **11**, the circuit thus established being completed from one side of the battery **101** to the other side thereof by way of the conductor **104**, the resistances R_1—R_2, F_3—F_4 and the conductor **102**. The bridge circuit also includes the magnet winding **87'** of the operating magnet **87**, reference being had to the switch S, which winding is connected, on the one hand, to the conductor **93** by a conductor **114** (within which is disposed the jack switch **14a**) and, on the other hand, to the conductor **100** by way of a conductor **115**, within which is disposed the jack switch **14b**. In order that the bridge circuit may be balanced as occasion may require to compensate, for example, for any gradual change in the characteristics of the filaments F_3 and F_4, there is interposed in the conductor **100** a resistance R_5 which, in conjunction with a wiper arm **116** interposed in the conductor **115**, constitutes a potentiometer P1. As to the potentiometer P1, it will be understood that by moving its wiper arms **116** in one direction or the other, as required, along the resistance R_5 the bridge circuit, assuming the switch **11** to be in closed-circuit position and that stable ambient conditions prevail in the immediate vicinity of the filaments F_3 and F_4, may be brought into a perfectly balanced condition, which condition is indicated when the indicator needle **84** of the relay meter **12** assumes a designated position, for example, zero-position, on the meter scale **86**.

The filaments F_3 and F_4 are housed within suitable chambers (not shown) of the combustion chamber unit **26** in accordance with the disclosure of the above-mentioned patent application, the chamber carrying, for example, the filament F_3 being sealed to the atmosphere so as to maintain that filament under stable ambient conditions and the chamber within which the filament F_4 is housed being connected to the pump **25** and the conduit **57** so as to enable that filament to be subjected to gases derived from the several outlying stations for individual examinations.

In order that a stable ambient condition may be insured with respect to the filament F_4 when balancing the bridge circuit through the instrumentality of the potentiometer P1, the conduit **57** is provided at a point intermediate the valve unit **24** and the combustion chamber unit **26** with a conventional type of three-way valve V_3. The valve V_3 is normally maintained (as by a spring, not shown) in such position that communication is afforded between the valve unit **24** and the combustion chamber unit **26**, the valve being equipped with a lever or handle, as shown, by which it may be manually moved to and held in such position that the combustion chamber unit is closed with respect to the valve unit and opened to the atmosphere by way of a suitable inlet port, not shown, with which the valve is provided. The spring just mentioned as associated with the valve V_3 is adapted to move that valve to its normal position and is, therefore, adapted to so function as to insure the closing of communication between the combustion chamber unit **26** and the atmosphere in the immediate vicinity of the apparatus and the establishing of communication between that unit and the valve unit **24** pursuant to the carrying out of a balancing adjustment of the bridge circuit.

From the foregoing description of the Wheatstone bridge circuit and its relation to the combustion chamber **26**, it will be understood that any burning of gas in the immediate vicinity of the filament F_4 will augment the normal heat inherent in that filament so that the filament resistance is increased with respect to the unaffected resistance of the filament F_3. Such increase in filament resistance will electrically unbalance the Wheatstone bridge circuit with the result that current is caused to flow across the bridge circuit by way of the magnet winding **87'**, thus energizing the magnet **87** which causes the indicator needle **84** to move in a clockwise direction (reference being had to Fig. 1) or in a counterclockwise direction (reference being had to Fig. 8). The various electrical factors entering into the circuit arrangement peculiar to the present invention may be such that a closed-circuit relationship between the indicator needle **84** (switch member S—1) and its associated switch member S—2 is effected at a predetermined point well below (say, at one third) the lower explosive limit of some given gaseous mixture such, for example, as gasoline vapor and air, in order that a warning signal or alarm may be given in the manner hereinafter more particularly described while there is still time to investigate and correct the cause of the dangerous condition.

Incident to establishing a closed-circuit con-

dition between the indicator needle **84** (switch member S—1) and its associated switch member S—2, a circuit is established from one side of the battery B to the other side thereof by way of an annunciator relay unit AR which circuit includes a portion of the conductor **104**, the contact **108**, the terminal **111**, a portion of the conductor **113**, a portion of the conductor **17'**, a conductor **117** (within which the operating winding **118** of the relay magnet **120** is disposed) the switch member S—1, the switch member S—2 and its associated conductor **121**, the conductor **102** and a portion of the conductor **72**. The annunciator relay unit AR includes a pair of movable contacts **122** and **124**, which are electrically connected to the conductor **117** and are adapted to be moved simultaneously incident to energization of the operating winding **118**, the circuit of which includes the conductor **117** leading to the switch member S—1 of the switch S forming a part of the relay meter **12**. Movement of the contacts **122** and **124** upon energization of the operating winding **118** causes these contacts to engage their respectively associated switch terminals **125** and **126**, the terminal **125** being connected to the conductor **95** which is common to the branch conductors *1f*—*6f* included in the individual circuits of the respective release magnets *1e*—*6e* of the annunciator unit **20** and the terminal **126** being connected to the return conductor **72** by way of a conductor **127** within which is disposed the operating winding **128** of the reset solenoid RS, the function of which is to automatically open the switch S of the relay meter **12** by moving the stop pins **85** and **85'** toward each other, as previously described, so as to overcome the holding effect of the magnet **82** (Fig. 1) on the indicator needle **84** and bring that needle to a central position with reference to the indicator scale **86** with which the relay meter is provided. It will be understood, of course, that it becomes necessary to break the holding effect of the magnet **82** on the needle **84** after the switch S has assumed closed circuit position, because otherwise that switch would be permanently held in closed circuit position which means that the annunciator relay AR would be constantly energized with the result that the several release magnets *1e*—*6e* would be operated in succession regardless of the atmospheric condition at their corresponding outlying stations. As to the stop pins **85** and **85'**, it is to be noted that since they are moved toward each other as the needle **84** is forcibly moved out of closed circuit position any tendency of the needle to unduly oscillate or swing from one position to another incident to its release is quickly and effectively over-come. At the instant the contact **122** engages its associated switch terminal **125**, an annunciator circuit is established from one side of the battery B to the other side thereof by way of contacts **108** and **111** of the bridge relay **106**, portions of conductors **113** and **17'**, the conductor **117**, the contact **122** and the terminal **125** of the annunciator relay AR, the conductor **95**, one of the branch conductors *1f*—*6f*, one of the contacts *1d*—*6d*, the bridge unit **73**, one of the contacts *1c*—*6c* and the return conductor **72**. In considering the several annunciator circuits, which respectively include the branch conductors *1f*—*6f*, it is to be observed that the particular annunciator circuit which is established by way of the conductor **95**, incident to the closing of the switch S with which the relay meter **12** is equipped, corresponds to the outlying station with respect to which an examination of the atmospheric condition is being conducted at the time the switch S is closed. In view of the control which is exercised over the several annunciator circuits by the multiple switch **70** and in view of the coordinated relation of that switch to the several outlying stations, it will be understood that upon establishing any given annunciator circuit the release magnet (*1e*—*6e*) corresponding to that circuit will so operate as to unlatch such annunciator tab **92** as corresponds to the outlying station at which the atmospheric condition is responsible for the establishment of a closed-circuit condition of the switch S. Immediately pursuant to the unlatching of an annunciator tab **92**, the reset solenoid RS operates to open the switch S, whereupon the operating winding **118** of the annunciator relay unit AR is deenergized incident to which the circuit of the operating winding **128** of the reset solenoid RS is deenergized, thus allowing the stop pins **85** and **85'** to return to their normal positions shown in Fig. 1. Should the indicator needle **84** (switch member S—1) move again to its closed-circuit position with relation to the switch member S—2 prior to such time as communication between the combustion chamber unit **26** and the outlying station at which the atmospheric condition was responsible for the establishment of a closed-circuit condition of the switch S in the first instance, the annunciator relay unit AR and the reset solenoid unit RS are again operated in the manner just described but the consequential energization and deenergization of the previously established annunciator circuit does not, of course, in any way affect the already released annunciator tab **92** unless such tab has been moved during the interim to its retracted or latched position. Here it is to be observed that any suitably manually operated means, such as a reset button **131**, may be employed for moving the annunciator tabs **92** to their retracted or latched positions, such button being common to all of such tabs as is well understood in connection with conventional mechanical resetting mechanisms in the annunciator art.

Upon establishing a closed-circuit condition of the switch S of the relay meter **12** and an energized condition of the annunciator relay AR, a suitable latch relay LR is operated inasmuch as the operating winding **132** of the latch relay magnet **134** is disposed in a conductor **135** which is connected to the conductors **95** and **72**, the latter of which is connected directly to one side of the battery B and the former of which is, under the assumed operating conditions, connected to the other side of the battery by way of the conductor **104**, the contact **108**, the terminal **111**, a portion of conductors **113** and **17'**, conductor **117**, contact **122** and its associated terminal **125**. Incident to energization of the latch relay magnet **134**, its associated switch **136** is moved to closed-circuit position, thereby establishing a circuit through the lamp **16**, which is colored to effect red illumination, by way of conductors **138** and **140**, connected, respectively, to the conductors **117** and **72**. Incident to establishing the lamp circuit, the switch member **141** of the switch **136** is locked in closed-circuit position by any suitable latching mechanism which, as will be readily understood by those skilled in the art, is adapted to maintain the switch member **141** in closed-circuit condition until such latching mechanism is manually released. It will be obvious to those skilled in the art that the releasing operation of such latching

mechanism as may be employed in connection with the switch member 141 may be conveniently effected through the medium of the reset button 131 already described as adapted for use in effecting manual return of the annunciator tabs 92 to their retracted positions.

From the foregoing description of the apparatus embodying the present invention, it becomes apparent that whenever a mixture of a combustible gas is encountered at one of the outlying stations to which lead the several conduits 1b—6b, a closed-circuit condition of the switch S is effected, provided, of course, the volume of combustible gas with respect to the volume of air commingled with such gas is such that the filament F_4 is so heated incident to the burning of the combustible gas within the combustible chamber 26 that the filament resistance is increased to such an extent that current of sufficient value is caused to flow across the bridge circuit to effect movement of the switch member S—1 into engagement with the switch member S—2. In this connection, it is to be borne in mind, as previously explained, that a closed-circuit relationship between the switch members S—1 and S—2 is effected at a predetermined point well below (say at one-third) the lower explosive limit of some given gaseous mixture such, for example, as gasoline vapor and air. Whenever a dangerous atmospheric condition (as determined by the point, with respect to the lower explosive limit, at which the switch S is closed) is encountered at an outlying station, the annunciator 20 operates to announce the outlying station at which the dangerous atmospheric condition is encountered; and substantially simultaneously with such an announcement the lamp 16, which is colored to effect red illumination, is energized so as to give further warning to the effect that a dangerous atmospheric condition has been encountered. At all times during normal operation of the apparatus the circuit of the lamp 17, which is colored to effect green illumination, is maintained closed, but should the Wheatstone bridge circuit be rendered inoperative by reason of the burning out of either the filament F_3 or the filament F_4, the operating winding 105 of the bridge relay 106 is so deenergized, as previously explained, that the circuit of the lamp 17 is automatically opened and the circuit of the lamp 18, which is colored to effect amber illumination, is automatically closed so as to indicate the burned out condition of one or the other of the filaments.

In view of the fact that the switch S of the relay meter 12 is closed, as previously explained, at a point well below (say, at one-third) the lower explosive limit of some given gaseous mixture such, for example as gasoline vapor and air, and in view of the fact that the indicator needle 84 (switch member S—1) of such switch is incapable of movement beyond its closed-circuit position, it has been deemed advisable to provide means to enable one to readily determine the exact character, from an explosive standpoint, of the gaseous mixture encountered where such mixture is at least sufficiently rich in combustible gas to cause the switch S to assume a closed-circuit condition, and to this end the jack unit 14 is employed to enable a galvanometer G to be easily and quickly connected across the Wheatstone bridge circuit where it temporarily supplants the relay meter 12. The galvanometer G is equipped with a suitable connector such as a conventional telephone plug 142 which, when inserted in the jack unit 14, opens the switches 14a and 14b of that unit, thereby cutting the relay meter 12 out of circuit and substituting for that meter the galvanometer which is provided with a graduated scale, not shown, adapted to function in conjunction with its associated indicator needle, not shown, to give an accurate indication of the character of the gaseous mixture from an explosive standpoint, thus enabling one to readily determine the extent to which a combustible gas is present in the encountered gaseous mixture. Although the primary function of the galvanometer G is to enable one to determine the exact character, from an explosive standpoint, of an encountered gaseous mixture which is such that the switch S is caused to assume a closed-circuit condition, it will be understood, of course, that the galvanometer may also be utilized to determine the exact character, from an explosive standpoint, of an encountered gaseous mixture when such mixture is insufficiently rich in combustible gas to cause the switch S to assume a closed-circuit condition.

Although only one form of the invention is herein shown and described, it will be understood that various changes may be made without departing from the spirit of the invention or the scope of the following claim.

A divisional application, Ser. No. 403,155, filed July 19, 1941, describes and claims the means described in this application by which the control circuit is rendered incapable of functioning in response to the burning out of a filament so as to erroneously indicate the presence of a dangerous gas condition, and the means by which a signal indicative of a burned-out filament condition is set up at the instant such condition occurs, in order that the attendant of the apparatus may be prompted to remedy the burned-out filament condition and thus recondition the impaired Wheatstone bridge circuit for normal operation without delay.

What is claimed is:

A gas indicator apparatus for use in carrying out an examination of atmospheric conditions at a plurality of outlying stations in succession, comprising a combustion chamber unit, means for effecting delivery of atmospheric samples to said combustion chamber unit from said outlying stations in succession and including a plurality of inlet conduits leading to said stations, a delivery conduit leading to said chamber, a valve unit having a plurality of scavenging ports and including a movable valve member common to said conduits and adapted to successively connect said stations with said chamber by way of said delivery conduit and said inlet conduits, valve actuating means for advancing said valve member to successive conduit-connecting positions and operating to open said delivery conduit to the atmosphere by way of at least one of said scavenging ports immediately prior to assuming any one of its respective conduit-connecting positions, a pump for drawing atmosphere through said chamber said delivery conduit and in succession through said inlet conduits as said valve member assumes successive conduit-connecting positions and for drawing pure air through said chamber and said delivery conduit by way of at least one of said scavenging ports immediately prior to such time as said valve member assumes any one of its respective conduit-connecting positions.

FREDERICK J. SCHIRM.