Sept. 29, 1942. F. NEUGEBAUER ET AL 2,297,238

FUEL SUPPLY FOR INTERNAL COMBUSTION ENGINES

Filed April 19, 1938

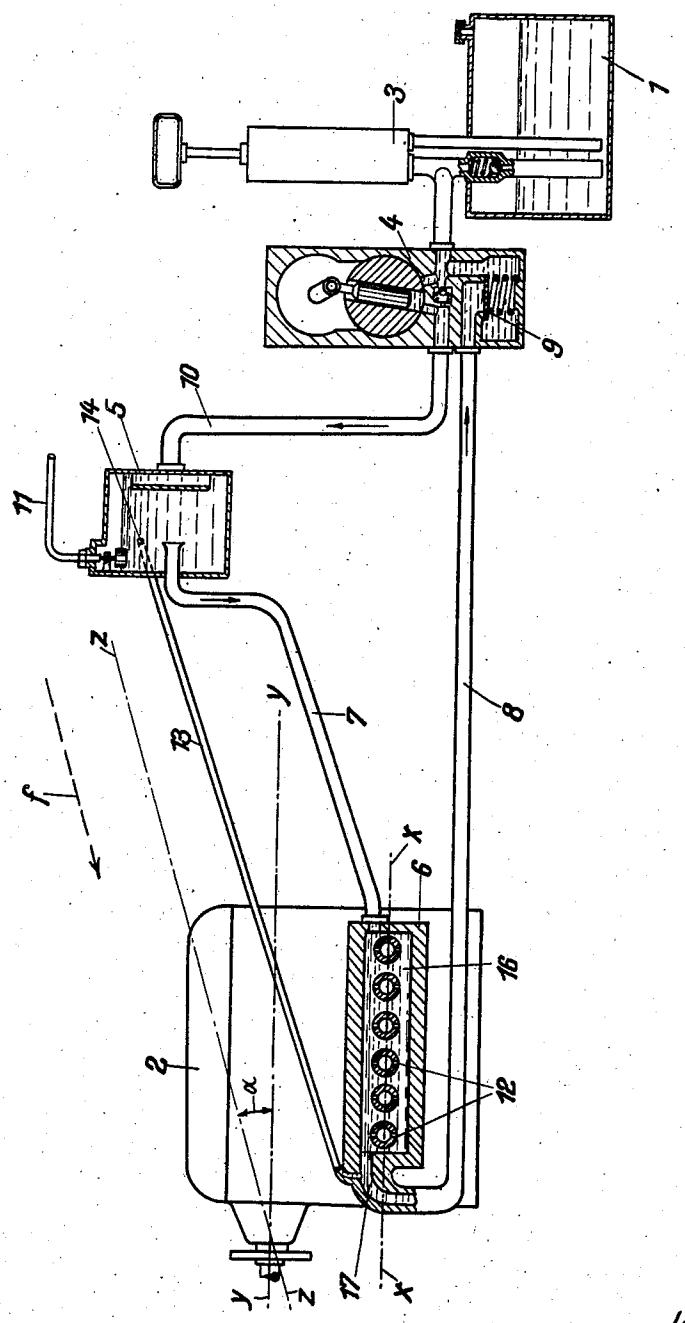

Inventors

Franz Neugebauer and August Richter By Michael & Michael, Attys.

Patented Sept. 29, 1942 2,297,238

UNITED STATES PATENT OFFICE

2,297,238

FUEL SUPPLY FOR INTERNAL COMBUSTION ENGINES

Franz Neugebauer, Allach, near Munich, and August Lichte, Dessau-Alten, Germany; vested in the Alien Property Custodian

Application April 19, 1938, Serial No. 202,934
In Germany May 22, 1937

1 Claim. (Cl. 123—139)

Our invention relates to the supply of fuel to internal combustion engines and has particular reference to means for freeing the liquid fuel injected into such engines from the air admixed to it.

It is well known that air present in a fuel supply system leading from the fuel tank through a delivery pump and an injecting pump to the engine, if entering the working chambers of the injection pump, injection pipes and nozzles, is liable to disturb the operation of the system.

It is a particular object of our invention to construct a system of fuel supply in such manner that before starting operation of the engine as well as during normal operation any air present in the fuel fed to the injection pump is separated from the fuel in the most perfect possible manner.

Means have already been provided for separating the air from liquid fuel flowing from a delivery pump to an injection pump. As a rule these separating means merely remove the greater part of the air or other gases which may be admixed to the fuel, before it reaches the injection pump and engine. It has however been found that even if such separating means are provided, disturbances of the injection by the air in the fuel may occur. This is due to the fact that the small quantities of air, which were not separated out by the separating device, will gradually collect in the low pressure space of the injection pump, until finally a larger quantity of collected air passes into this pump.

In order to avoid this drawback, we provide a connection, through which the fuel supplied to the injection pump in excess and therefore not entering the engine is returned to the suction side of the delivery pump, from which it can now be conveyed afresh to the separating device and from there to the injection pump.

Our invention thus comprises a method of air and fuel separation, in which the fuel is permanently kept circulating from the delivery pump through the separating device to the injection pump and back to the delivery pump, so that also small quantities which may have been left in the fuel during its first passage through the separating device, are now prevented from collecting in the low pressure space of the injection pump, being permanently carried back by the fuel returning into the separating device, to be there removed. We thereby obtain a highly efficient separation of the air, which will prove useful also in the case where fuel is fed to the injection pump under a considerable pressure above normal.

In order to remove the air, which before the start of the engine fills the fuel pipes between the delivery pump and the engine, as completely as possible from all parts of the pipes and more especially also from the injection pump, we may further connect the space on the low pressure side of the injection pump, which contains fuel, with the separating device by means of a separate pipe, through which this air may escape into the separating device and into atmosphere.

In the case of an aero engine provision has to be made for the inclined position of the longitudinal axis of the aeroplane when the aeroplane rests upon the ground, the tail of the plane being lower than the nose. No part of the fuel line should make with the longitudinal axis of the craft an angle which is smaller than the angle which this axis makes with the horizontal in the tail down position. If care is taken to avoid this, the fuel is prevented from accumulating in the line and from blocking it, and therefore air can be successfully separated from the fuel in the tail down position of the plane.

In the drawing affixed to this specification and forming part thereof an embodiment of our invention is illustrated by way of example in a diagrammatic elevation, partly in vertical section.

Referring to the drawing, 1 is a fuel tank, 2 indicates the internal combustion engine, 3 is a hand-operated pump and 4 is the fuel pump driven by the engine. 5 is the air and fuel separating device, 6 is the injection pump. From the end of the low pressure space 16 of the injection pump, which is opposite the point where the pipe 7 coming from the separating device ends, a pipe 8 leads to the pressure regulating and check valve 9 and from here back to the suction side of the fuel pump 4.

During normal operation this system operates in such manner that fuel is forced by the pump 4 through pipe 10 into the separating device 5, to be freed in this device from the greater part of the air admixed to it, which can escape into atmosphere through a pipe 11, so that as a rule fuel substantially free from air flows through pipe 7 to the injection pump 6. That part of the fuel conveyed by pump 4, which exceeds the quantity to be injected into the engine, returns through the pipe 8 to the fuel pump in order to be conveyed afresh through the separating device to the injection pump. The small quantities of air which have still entered the low pressure space 16 of the injection pump, are carried along

by the fuel in excess returning through pipe 8 and are carried back to the suction side of the fuel pump 4. This part of the fuel, which still contains some air, is then returned, together with fresh fuel, by the pump 4 through pipe 10 to the separating device 5, to be there freed again from air before being fed again to the injection pump 6. Since this circulation is permanently kept going during the operation of the engine, any accumulation of air or other gaseous admixtures, which might disturb the injection, in the low pressure space of the injection pump 6 is avoided altogether.

In order to explain the mode of action of the invention before the engine of an aircraft is started, let us assume that the longitudinal axis $y—y$ of the engine 2 and the longitudinal axis $x—x$ of the injection pump extend in parallel to the longitudinal axis of the craft and that the position of these axes $x—x$ and $y—y$ in the drawing corresponds to the tail down position of the craft on the ground. During normal flight these axes take up the horizontal position illustrated by the line $z—z$, which makes with the tail down position $y—y$ the angle α. The direction of flight is indicated by the arrow f parallel to line $z—z$.

Before the engine is started, no fuel, but only air is present in the pipe 10, the separating device 5, the pipe 7, the injection pump 6 and the return pipe 8. Now first the casing of the separating device 5 is filled with fuel by means of the hand pump 3. When the fuel, after having already been freed from most of the air admixed to it through the action of the separating device, reaches the pipe 7, it will flow through this pipe into the low pressure space 16 of the injection pump 6, gradually displacing the air filling this space. In order to enable the air to escape from the pipe 7 and the low pressure space 16 of the injection pump, a narrow pipe 13 is connected to that point 17 of the space 16, which is the highest in the tail down position of the craft and up to which the fuel rises only after having filled the suction ports 12 of all the cylinders of the injection pump. The pipe 13 leads back to the separating device 5, ending at the point 14 above the end of the pipe 7. The pipe 13 conducts the air displaced by the fuel from the pipe 7 and the space 16 into the top part of the separating device 5 so that it can escape through the pipe 11. In order to guarantee a reliable exhausting of the air from the low pressure space 16 of the injection pump, the pipe 13 is so arranged that it constantly rises from the injection pump with the inclination of the pipe 13 relative to the longitudinal axis of the craft greater at any point than the angle α. We thus prevent any quantities of fuel from accumulating in the pipe 13 while the craft occupies the tail down position, which might impair the supply of the engine with air-free fuel by preventing the air exhaustion from taking place.

Preferably the pipe 7 leading from the air separating device to the injection pump is arranged in a similar manner in order to prevent any residual fuel from remaining in this pipe, when the fuel line is emptied, which might prevent or hinder the air from escaping when fresh fuel is filled in. As long as the craft occupies during flight a position, in which the end 14 of the pipe 13 lies below the fuel level in the separating device 5, a small fraction of the fuel flows through this pipe 13 to the injection pump. In all other cases, for instance during a steep climb, this pipe is filled with fuel up to a corresponding level so that the operation of the engine is not impaired by the presence of the pipe 13.

We wish it to be understood that we do not desire to be limited to the exact details of construction shown and described for obvious modifications will occur to a person skilled in the art.

We claim:

An air eliminating system for the fuel supply to an internal combustion engine provided with a fuel pump and an injection pump, said system comprising, in combination with said fuel pump and injection pump, an air and fuel separating device between the two pumps, and a fuel circulating system interconnecting said fuel pump, device, and injected pump composed of a first conduit for conducting fuel from said fuel pump to said device, a second conduit for conducting fuel from said device to said injection pump, a third conduit for conducting excess fuel from said injection pump directly to said fuel pump for recirculation therethrough, and a fourth conduit connecting said injection pump and said device for releasing air entrapped in said injection pump.

FRANZ NEUGEBAUER.
AUGUST LICHTE.