Dec. 2, 1941. E. B. MOORE 2,265,043

CENTRIFUGAL CASTING MACHINE

Filed April 1, 1940 2 Sheets-Sheet 1

Fig. 1

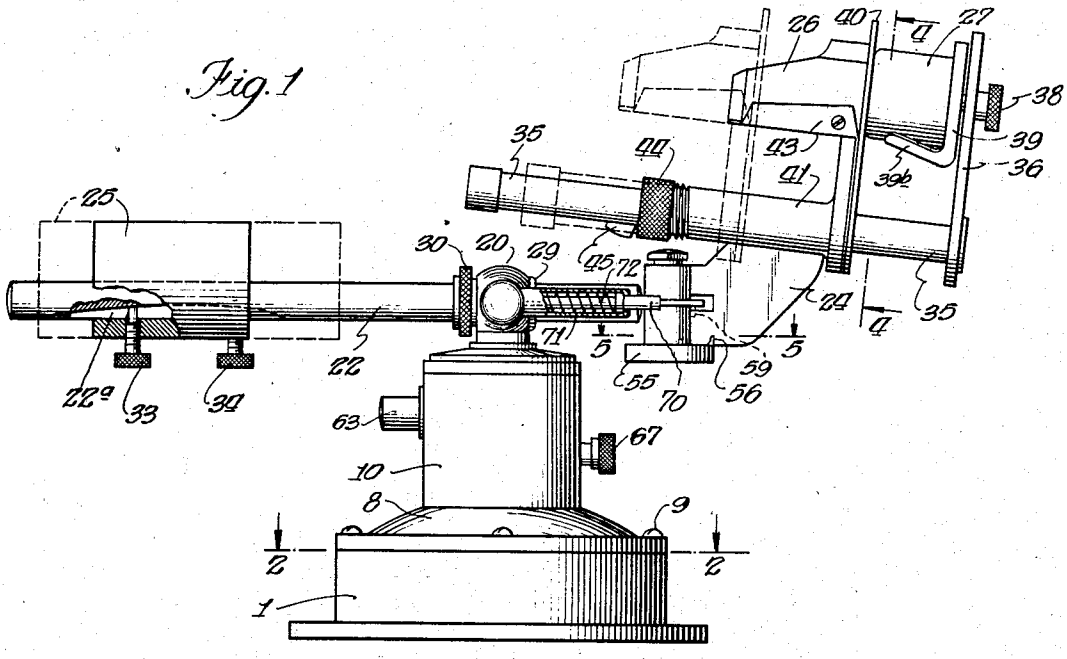

Fig. 2

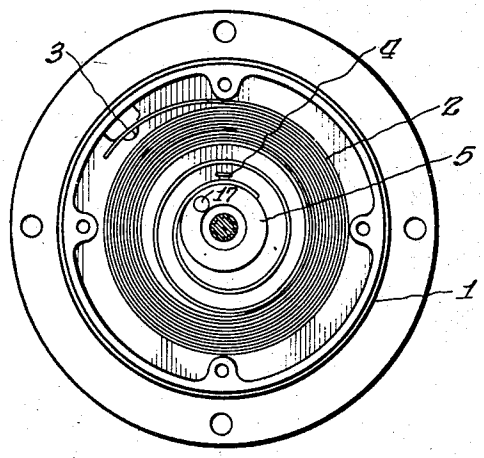

Fig. 3

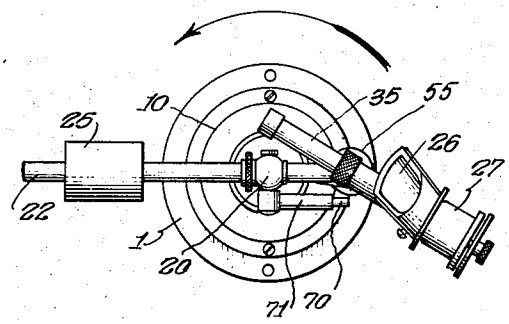

Fig. 4

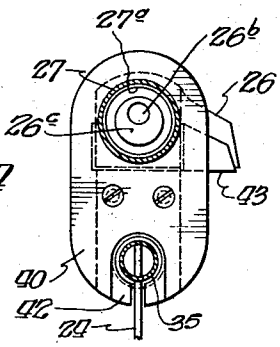

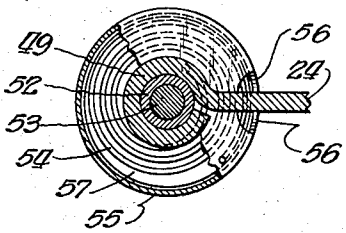

Fig. 5

Inventor:
Emmett B. Moore
By: Burton & Burton
Attorney.

Dec. 2, 1941. E. B. MOORE 2,265,043

CENTRIFUGAL CASTING MACHINE

Filed April 1, 1940 2 Sheets-Sheet 2

Fig. 6

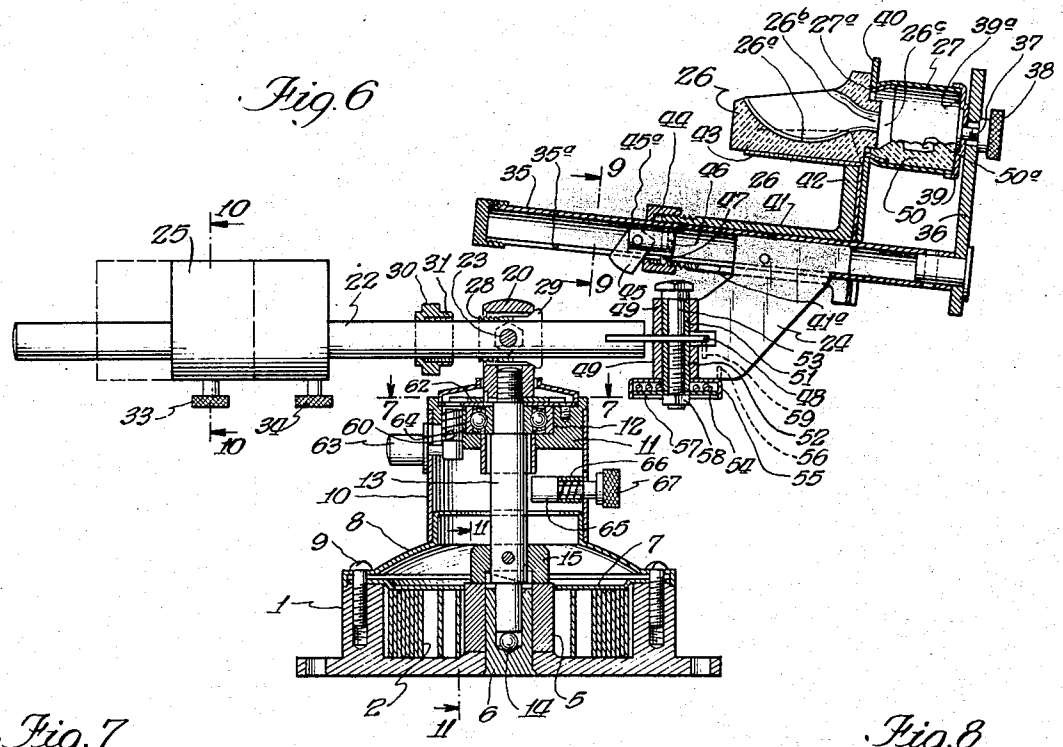

Fig. 7

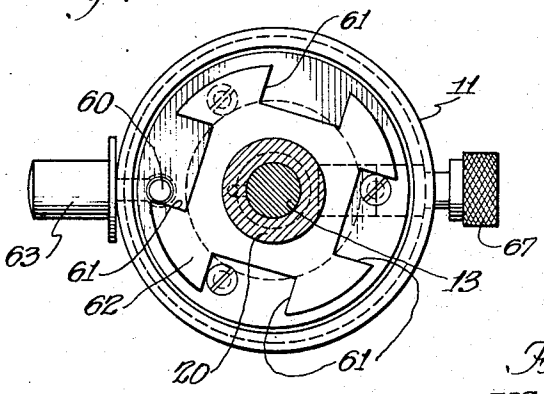

Fig. 8

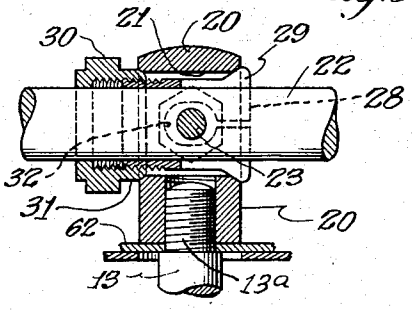

Fig. 9

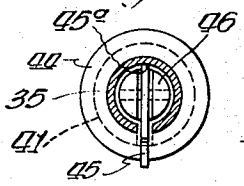

Fig. 10

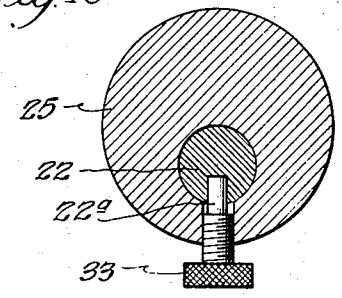

Fig. 11

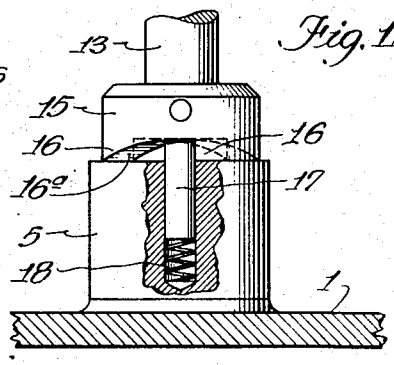

Inventor:
Emmett B. Moore
By: Burton & Burton
Attorney.

Patented Dec. 2, 1941 2,265,043

UNITED STATES PATENT OFFICE

2,265,043

CENTRIFUGAL CASTING MACHINE

Emmett B. Moore, Evanston, Ill.

Application April 1, 1940, Serial No. 327,160

10 Claims. (Cl. 22—65.1)

This invention relates to casting machines of the centrifugal type employed in the casting of small articles of gold or other similar metals, as, for example, inlays or large fillings for dental work, or articles of jewelry.

One object of the invention is to provide a mechanism including rotatable parts which are smooth-running, with a minimum of friction, and thus adapted to continue their rotation for a considerable period after cessation of the original driving impulse.

Another object is to provide an articulated connection between the crucible and mold-carrying parts and the rotatable driving mechanism, to permit said crucible and mold to respond to both centrifugal and inertia forces, and to assume corresponding positions such as to avoid splashing or spilling of the molten metal during the initial portion of the rotary movement.

Another object is to provide yielding means for controlling such articulation and facilitating return of the parts to the control of centrifugal force when the effect of inertia has been overcome.

A further object is to provide means for readily adjusting the mechanism to a balanced condition for a given load of molten metal and the weight of a corresponding mold.

And it is also an object of the invention to provide readily adjustable means for releasing the mold or securing it, together with means for engaging the mold, in secured position, which shall eliminate any possibility of its escape under the action of centrifugal force during the casting operation.

Other objects will appear as the description proceeds. The invention consists in certain features and elements of construction in combination, as herein shown and described and as indicated by the claims.

In the drawings:

Figure 1 is a side elevation of a centrifugal casting machine embodying this invention, showing the parts as adjusted, ready for use.

Figure 2 is a plan section taken as indicated at line 2—2 on Figure 1 to show the motor spring from which the rotary impulse is derived.

Figure 3 is a top plan view taken on a reduced scale, indicating approximately the initial positions assumed by the parts at the commencement of rotary motion.

Figure 4 is a detail section taken as indicated at line 4—4 on Figure 1, showing the relation of the crucible to the mold ring.

Figure 5 is a detail section taken as indicated at line 5—5 on Figure 1, showing the return spring for the hinged mold-carrying arm.

Figure 6 is an axial vertical section showing the parts in substantially the same position as in Figure 1, and revealing details of the internal structure.

Figure 7 is a plan section taken as indicated at line 7—7 on Figure 6, but on a larger scale.

Figure 8 is a detail section at the same plane as Figure 6, but on a larger scale.

Figure 9 is a detail section taken as indicated at line 9—9 on Figure 6.

Figure 10 is a detail section at line 10—10 on Figure 6.

Figure 11 is a detail section at line 11—11 on Figure 6.

In the casting of gold or like metals in producing relatively small articles, such as dental fillings and inlays, and small pieces of jewelry, it is important to transfer the molten metal from the crucible to the mold quickly and under some pressure so as to cause the metal to flow into all parts of the mold, including narrow passages and delicate features, and to insure that no air shall be pocketed in the mold. For this purpose the crucible and mold are frequently mounted for rotation and arranged so that the centrifugal force thus generated shall act to transfer the metal from the crucible into the mold; and in such apparatus, in order to secure a high initial velocity, it is common to attach the rotatable parts to a motor spring which is wound up under tension, and then released suddenly for starting the rotation. A one-way clutch permits the parts to continue rotating after the spring has expended its force, so that the centrifugal force may continue to act while the metal is cooling and hardening in the mold. In a machine of this character it has been a difficult problem to initiate the rotation of the crucible and mold with the molten metal therein, suddenly and forcibly, but without causing the metal to splash or spill from the crucible. Certain features of the present invention provide a successful solution of this problem.

As shown in the drawings, the machine includes a hollow base 1 within which there is horizontally coiled a motor spring 2 having its outer end anchored to the wall of the base at 3, and with its inner end attached by a stud 4 to a hub 5 which is journaled for rotation on an upstanding central stud 6 fixed in the base housing 1. A partition or cover plate 7 is secured directly over the spring 2 to hold it in place, and a sloping cover member 8 overlies the peripheral

portion of the partition, said partition and cover being secured to the base housing 1 by a single set of fastening screws 9.

A cylindrical shell 10 extends upwardly from the cover 8, and near its upper end supports a filler block 11 in which there is mounted an annular ball bearing assembly 12 for a vertical spindle 13 whose lower end is journaled in a bore formed in the stud 6, and is stepped upon a steel ball 14 so as to be freely rotatable upon its vertical axis. The spindle 13 has rigidly pinned to it a clutch collar 15 which is provided with ratchet teeth 16 formed on its under surface for one-way driving engagement with a clutch pin 17 yieldingly upheld by a spring 18 pocketed in the hub 5 to which the inner end of the spring 2 is anchored. Thus when the spindle 13 is turned in one direction with a tooth 16 engaging the pin 17, it operates to wind up the spring 2, and when the spindle is then released the spring unwinds, and the pin 17 transmits rapid rotary motion to the spindle 13. When the force of the spring has been spent, this rotation can continue because the sloping faces 16ᵃ of the clutch teeth 16 will ride over the end of the clutch pin, depressing it in opposition to its light spring 18, and permitting the spindle to continue turning in its bearings.

The upper end of the spindle 13 is shown as threaded at 13ᵃ to carry a head 20 having a horizontal bore 21 through which there extends an arm 22 shown as a rod of cylindrical cross-section. This rod is anchored in the head 21 by a cross-bolt 23, and one end of the arm supports a hinged bracket 24 by which the crucible and mold are carried in a manner about to be described. The other end of the arm 22 carries a weight 25 which is slidably adjustable on the arm, and which serves to balance the weight of the parts at its opposite end for insuring relatively smooth rotation of said parts about the axis of the spindle 13 when the latter turns in its bearings. The weight 25 is made adjustable because the weight of gold or other metal placed in the crucible, and subsequently transferred to the mold by centrifugal force, will vary in accordance with each particular piece of work handled by the machine. The crucible is indicated at 26, and the mold-carrying ring at 27. With these parts locked in position, and with a quantity of metal in the crucible, it is the usual practice to apply heat to the metal, as by means of a blow torch or similar device, but before thus melting the metal the parts are balanced about the axis of the cross-bolt 23 to insure proper operation.

The bore 21 in the head 20 is considerably larger than the diameter of the arm 22, and a portion of the clearance space is occupied by a split tubular collet 28, having a tapered flange 29 at one end, and being threaded at its opposite end. One end of the bore 21 is flared to provide a seat for the tapered flange 29 of the collet, and a flare at the other end of said bore 21 provides a seat for the rounded corner of a reduced portion 31 of the nut 30; thus when the nut is tightened on the threads of the collet, it draws the tapered flange 29 of the collet into the flared end of bore 21, and compresses the collet snugly onto the arm 22, fixing the latter firmly in the head 20. To permit the parts to be balanced about the axis of the cross-bolt 23, the nut 30 is unscrewed from the threads of the collet 28, or, at least, backed off part-way along said threads, and the clearance slots 32 in the collet, which accommodate the cross-bolt 23, permit the collet to be shifted endwise, away from its tapered seat in the head 20, leaving the arm 22 free to rock upon the cross-bolt 23, through a limited angle. Static balance is then attained by shifting the weight 25 slidably along the arm 22 until it just balances the parts carried by the other end of the arm; then, preferably, it is moved a trifle farther outward along the arm 22 for more perfectly approximating the condition of dynamic or running balance, and also to compensate for the fact that the metal in the crucible 26 will be transferred outwardly to the mold in the operation of the machine. A pair of set screws 33, 34, threaded in the weight 25, impinge against the bottom of a groove or channel 22ᵃ in the arm 22 for holding the weight at adjusted position. Preferably, the channel 22ᵃ is made of graduated depth, diminishing outwardly, as seen in Figure 1, so that a step-by-step adjustment of the weight 25 may be made by first setting the screw 33 to the bottom of the channel and then unscrewing it a few degrees, shifting the weight 25 outwardly a short distance until a shallower portion of the groove 22 engages the re-adjusted screw 33, then repeating this adjustment, if necessary, until the desired position of the weight 25 is attained. This arrangement also involves a safety feature in that it prevents the weight 25 from flying off the arm 22 if the set screws should become loosened during operation of the machine. A slight loosening of the screws would merely permit the weight to become wedged a little further outward along the arm 22 by the engagement of the loosened set screw with the bottom of the channel 22ᵃ at a shallower portion thereof.

A bracket member 24, carried at the other end of the arm 22, supports a tubular member 35 which carries rigidly at its outer end a plate 36 to which there is removably attached, by means of the bolt 37 and thumb nut 38, a holder 39 for the mold ring 27. Said ring is a metallic sleeve which seats against the end wall 39ᵃ of the holder 39 and lodges temporarily on its arms 39ᵇ. At the end opposite the holder 39 the ring 27 is provided with a reduced annular projection 27ᵃ which fits an opening in a plate 40 extending parallel to the plate 36 but slidably mounted on the arm 35 by means of a sleeve 41 having a terminal flange 42 to which the plate 40 is secured. This structure, including the plate 40 and flange 42, supports a tray 43 flanged at both sides and formed to receive the crucible 26 of refractory material. The crucible includes a depressed basin 26ᵃ which receives the gold or other metal and supports it while the heat is applied for melting it. An outlet port 26ᵇ is arranged somewhat above the bottom of the basin 26ᵃ and terminates in an annular projection 26ᶜ, which is dimensioned to extend through the plate 40 and thus interlap with the annular terminal 27ᵃ of the mold ring 27, it being understood that the plaster mold 50, within the ring 27, will include a tapered inlet to the cavity 50ᵃ of the mold, and that such tapered inlet will be dimensioned to receive the projection 26ᶜ of the crucible. When the mold ring 27, containing the mold 50, has been placed in the holder 39, the crucible-supporting plate 40 is slidably adjusted against the mold ring with the reduced portion 27ᵃ thereof fitting the opening of the plate 40. The parts are then locked in this position by means of a ring nut 44 on the end of the sleeve 41. The hollow arm 35 is slotted on its under side at 35ᵃ to accommodate the clutch dog 45 which is pivotally

carried by a slotted plug 46 which is located inside the tube 35 but anchored to the sleeve 41 by means of a cross-pin 47. When the nut 44 is partially backed off from the threaded end of the sleeve 41, it swings the tail of the dog 45 about its pivot so as to forcibly engage a corner or tooth 45ᵃ of the dog at its upper end with the inner wall of the tube 35, thus locking the sleeve 41 in position. The sleeve is slotted at 41ᵃ to provide clearance for the flat arm 24 by which the tubular arm 35 is supported.

The flat arm 24 is bifurcated at its lower end to fit above and below a plate 48 extending rigidly from the end of the arm 22, and the twin terminals 49, 49 of the arm 24 are bent to form the tubular portions of a hinge connection between the plate 48 and the arm 24. The terminals 49 enclose bushing sleeves 51 and 52 respectively, which are clamped to opposite faces of the plate 48 by a bolt 53 extending through the bushings so that the curled terminals 49 are thus journaled on the bushings 51 and 52 to permit swinging of the arm 24 at an angle to the arm 22.

Such motion, however, is controlled by means of a small coil spring 54, having one end anchored to an inverted cup 55 which is itself anchored to the arm 24 by lugs 56 straddling the arm; the other end of the spring is engaged with a disk 57 which encloses the spring in the cup 55, and is clamped against the end of the bushing 52 by the nut 58 on the bolt 53. A stop pin 59, depending from the plate 48, limits the swinging movement of the arm 24 about its hinged connection to the arm 22 at a position in which they are aligned, so that the tubular arm 35 is held in alignment with the arm 22, and the spring 54 urges the parts to this position. But when the arm 22 is released for rotation by the force of the spring 2, the inertia of the arms 24 and 35, and the parts carried thereby, causes them to lag slightly so that the arm 24 swings away from the stop pin 59. The spring 54 cushions and checks this movement, and as the rotation of the arm 22 gets under way, the centrifugal force swings the arm 24 back into alignment with the arm 22, at the same time causing the molten metal in the basin 26ᵃ to flow through the port 26ᵇ into the cavity 50ᵃ of the mold. But at whatever instant this flow occurs, the position of the arm 35 corresponds with the direction of the resultant of the centrifugal and inertia forces, and, accordingly, the crucible and mold, with their connecting port 26, are aligned in the direction of resultant force, so that the metal travels directly from the basin 26ᵃ to the mold cavity 50ᵃ, without any tendency to spill or splash over the sides of the crucible basin. All this ordinarily occurs in the first few degrees of rotation, after which the arm 22 continues to turn until its momentum is overcome by friction, or it is purposely arrested by the operator.

As already indicated, the spring 2 is tensioned sufficiently by turning the arm 22 in a direction opposite to that in which it is to rotate during the casting process. Even a partial turn will store considerable energy in the spring, and when the spring has been wound sufficiently, in the judgment of the operator, the parts may be checked by lifting a stop pin 60 into engagement with one of the notches 61 in a plate 62 fixed to the upper end of the spindle 13. A handle 63 is connected to the pin 60 and extends outside the shell 10 for lifting the pin, and when it has been thus raised, the tension of the spring 2 serves to maintain plate 62 in engagement with the pin 60 until, when he is ready to start the machine in motion, the operator swings the arm 22 a few degrees back from its locked position, thus disengaging the notched plate from the pin 60 and allowing the latter to drop away from locking position by gravity or under the influence of its own spring 64. The operator then releases the arm 22 to allow it to be rotated by the spring 2. After the device has rotated long enough, it may be arrested by means of a friction brake shoe 65 normally held out of contact with the spindle 13 by a spring 66, but provided with a thumb-piece 67 outside the shell 10 for manipulation at will.

Since the mold ring holder 39, with its fingers or prongs 39ᵇ, is designed to support only a limited range of sizes of mold rings, it is made readily removable by loosening of the nut 38 so that it may be replaced with a larger holder, if a larger mold ring is to be employed. In the case of a mold ring of maximum size it may be that the inertia of these parts at the start of rotation of the arm 22 may cause the floating arm 35 to swing about its pivotal connection to the arm 22 through a considerable angle—perhaps as much as 90 degrees; and to arrest the parts gently, under such circumstances, there may be provided a yielding bumper in the form of a plunger 70, carried in a guide sleeve 71 and backed by a spring 72 in the sleeve, which spring will be compressed when the bracket 24 bears against the plunger 70 in swinging through its maximum angle. In any event, the bracket 24 and the arm 35 will be returned promptly into alignment with the arm 22 by means of the spiral spring 54 acting about the axis of the hinge.

To insure that, as the molten metal fills the mold cavity 50ᵃ, there will be no air pocketed in the cavity, I prefer to mount the mold at a slight inclination such that the upper portion of the mold is a little farther from the axis of rotation than the lower portion. Since the centrifugal force increases with the distance from the axis, the force acting outwardly on the molten metal then tends to cause it to climb in the mold, overcoming the force of gravity which, otherwise, would cause the metal to accumulate first in the lower portion of the mold cavity. By thus overcoming the gravitational effect I cause the molten metal to be forced simultaneously against the entire surface of the mold cavity, thus expelling the air from all parts of the mold by way of the porous material of which the mold is formed, and producing a casting of perfect form and sharp delineation. The desired inclination of the mold may be secured by tilting the plate 36 on which the mold ring 27 is mounted, and since the plate 36 is most conveniently set at right angles to the arm 35, I attach this arm 35 to the bracket plate 24 at a slight inclination to the horizontal, as seen in Figs. 1 and 6.

As seen in Figure 3, the trough of the crucible 26 is not exactly aligned with the axis of the mold ring 27, but is disposed at a slight angle thereto, which increases the angularity of the crucible trough with respect to the arm 22 over that produced by the swinging of the floating arm 35 about its hinge in response to inertia of the parts when the rotation commences. This insures an initial angularity at the first instant of movement before even the force of inertia can cause the parts to respond by swinging

about the hinged connection between the arms 22 and 35, and thus prevents any splashing or spillage of the molten metal over the sides of the crucible in this initial instant of rotation.

While there is shown and described herein certain specific structure embodying the invention, it will be manifest to those skilled in the art that various modifications and re-arrangements of the parts may be made without departing from the spirit and scope of the invention, and that the same is not limited to the particular form herein shown and described, except in so far as indicated by the appended claims.

I claim as my invention:

1. In a centrifugal casting machine, a spindle journaled for rotation about a vertical axis, a horizontal arm carried thereby, a crucible and mold supported by the arm at a distance from the axis of rotation, a balancing weight adjustable along the arm at the other side of said axis, said spindle having a head formed with a bore through which the arm extends, said bore being larger than the arm and the head having a fulcrum on which the arm may rock while the weight is adjusted to balancing position, a collet on the arm having a split tapered portion and a shank extending into the bore, and means for forcing said tapered portion of the collet into the bore of the spindle head to tighten the collet on the arm and lock said arm in rigid relation to the spindle.

2. In a centrifugal casting machine, a spindle journaled for rotation about a vertical axis, a horizontal arm carried thereby, a crucible and mold supported by the arm at a distance from the axis of rotation, a balancing weight adjustable along the arm at the other side of said axis, said spindle having a head formed with a bore through which the arm extends, said bore being larger than the arm and being flared at both ends, a horizontal pivot securing the arm in the head and on which the arm may rock while the weight is adjusted to balancing position, a collet on the arm having a split tapered portion and a threaded shank extending through the bore, and a nut on said shank having a portion to fit into one flared end of the bore when the nut is tightened to draw the tapered portion of the collet into the opposite flared end of said bore for compressing the collet and locking the arm in rigid relation to the spindle.

3. A centrifugal casting machine which includes an arm mounted for rotation about an axis with a crucible and mold supported by the arm at a distance from the axis of rotation and a balancing weight adjustable along the arm at the other side of said axis, characterized by said arm having a groove of graduated depth diminishing toward the outer end of the arm, and a set screw in the weight adjustable to bear against the bottom of said groove for clamping the weight at adjusted position on the arm.

4. In a centrifugal casting machine, an arm mounted for rotation about a transverse axis, a mold support connected to said arm by pivotal means at a distance from said axis, and spring means reacting between the pivotally connected parts and resiliently urging the mold to its maximum distance from the axis of rotation.

5. In a centrifugal casting machine, an arm mounted for rotation about a transverse axis, a mold support with pivotal means connecting said support to the arm at a distance from the axis of rotation to permit the support to swing away from the direction of rotation in response to the inertia of the pivoted parts when the arm begins to rotate, and spring means reacting between the arm and said pivoted support to cushion such swing of the support.

6. In a centrifugal casting machine, a horizontal arm mounted for rotation about a vertical axis, a mold support with a vertical pivot connecting said support to the arm at a distance from the axis of rotation to permit the support to swing away from the direction of rotation in response to the inertia of the pivoted parts when the arm begins to rotate, spring means constantly acting to urge the support yieldingly outward to its maximum distance from the axis of rotation, and stop positioned to limit the outward movement of the support.

7. In a centrifugal casting machine, an arm mounted for rotation about a transverse axis, a mold support pivoted to one end of said arm, a stop on the arm for limiting the swing of the mold support to a position substantially in alignment with the arm, and spring means limiting the swing of the mold support away from alignment to a position substantially at right angles to the arm.

8. In a centrifugal casting machine, a horizontal arm mounted for rotation about a vertical axis, a bracket in the form of a flat plate hingedly connected to the end of said arm and extending upwardly therefrom in a vertical plane, a mold-carrying arm of circular cross-section secured to said bracket above the horizontal arm, and a crucible support including a tubular part telescopically engaged with the mold-carrying arm and having an elongated slot at its under side straddling the bracket plate, said slot being longer than the portion of the plate which it engages whereby the crucible support is held upright on the arm with capacity for sliding adjustment toward and from the mold.

9. In a centrifugal casting machine, a horizontal arm mounted for rotation about a vertical axis, a tubular arm connected thereto by a vertical pivot, a mold ring support carried fixedly by said tubular arm, a crucible support including a tubular member telescopically engaged with the tubular arm, said tubular arm having a slot extending longitudinally therein, a clutch dog disposed in said slot, a pivotal support for the dog within the tubular arm, but anchored to the slidable member by means extending through said slot, said dog having a tooth engageable with the inner surface of the tubular arm and a nut threaded on the slidable member in engagement with a portion of the dog and adjustable to rock the dog about its pivot and force the tooth of said dog into clutching engagement with the arm.

10. In a centrifugal casting machine which includes a horizontal arm journaled for rotation about a vertical axis, the combination of means for supporting a crucible and mold thereon comprising a bracket plate extending in a vertical plane having one end bifurcated, the bifurcated terminals being bent into cylindrical form, a horizontally disposed flat plate forming the terminal of the arm and extending between said bifurcated parts, bushings extending above and below said plate in axial alignment and embraced by the cylindrical bracket terminals respectively, and threaded means clamping said bushings against opposite faces of said flat plate but permitting said bracket to swing freely on the hinge thus formed.

EMMETT B. MOORE.