Aug. 19, 1941. A. J. CREPEAU 2,253,019

OVERHEAD CABLE SPRAYING APPARATUS

Filed Aug. 25, 1938 3 Sheets-Sheet 1

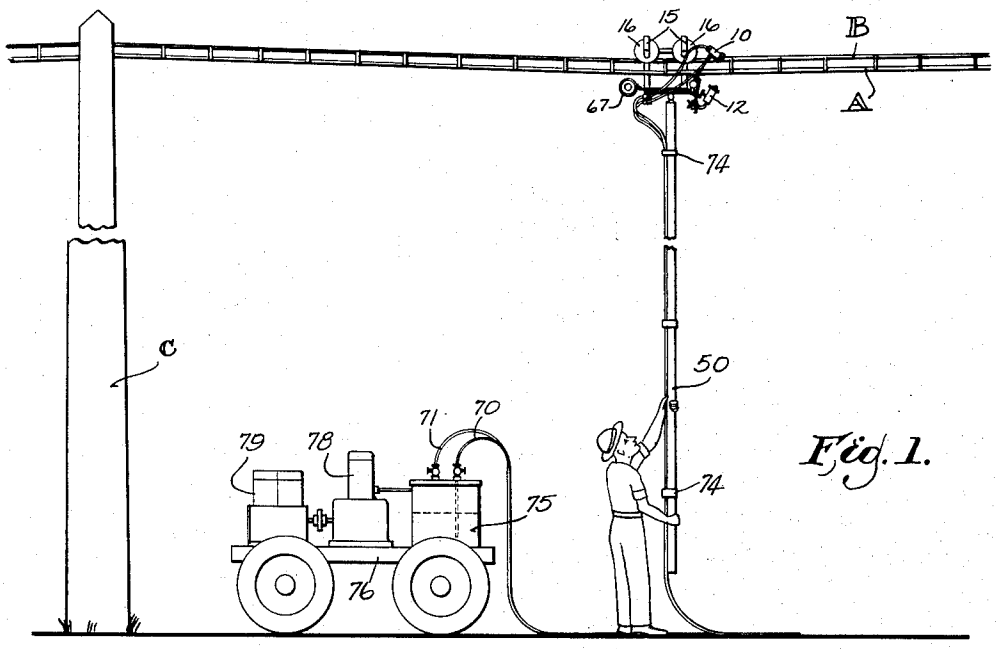

Fig. 1.

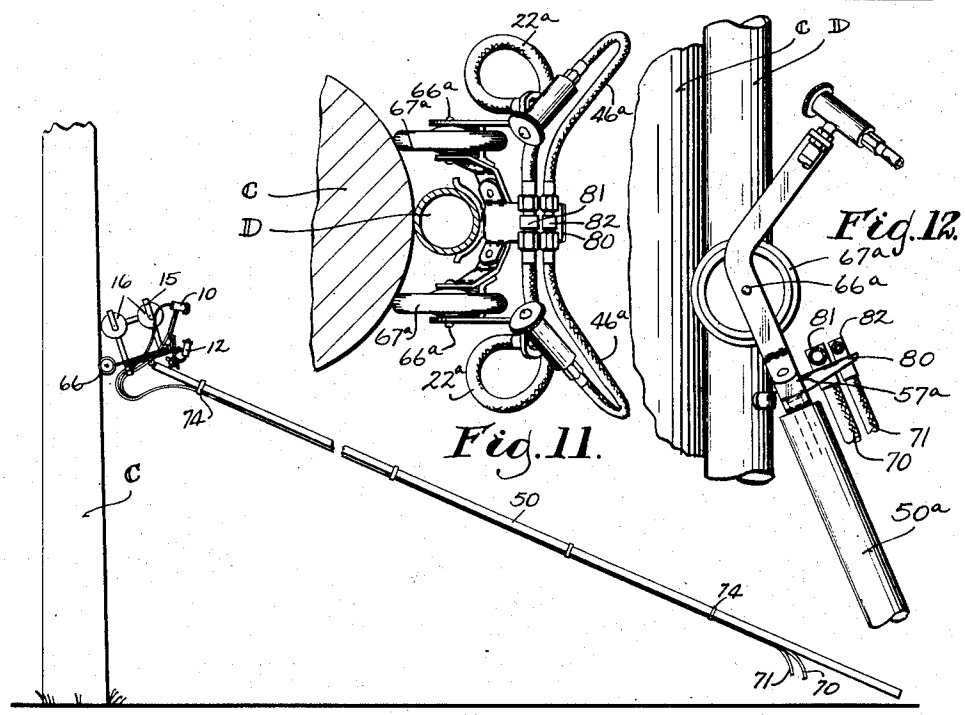

Fig. 11.

Fig. 12.

Fig. 2.

INVENTOR.
ALLEN J. CREPEAU

BY

Wheeler, Wheeler & Wheeler
ATTORNEYS

Aug. 19, 1941. A. J. CREPEAU 2,253,019

OVERHEAD CABLE SPRAYING APPARATUS

Filed Aug. 25, 1938 3 Sheets-Sheet 2

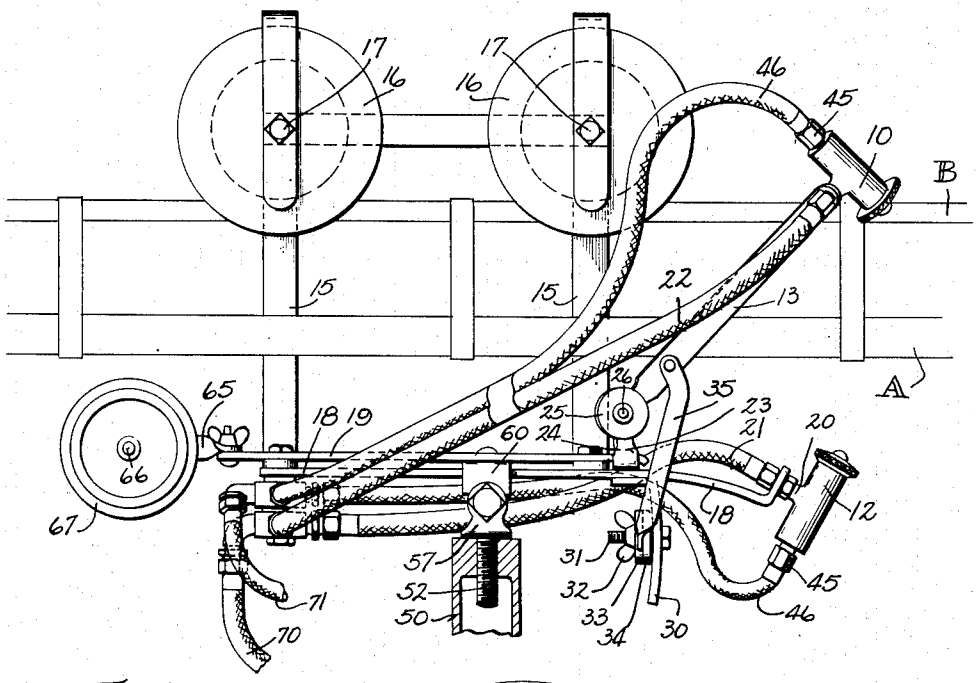

Fig. 3.

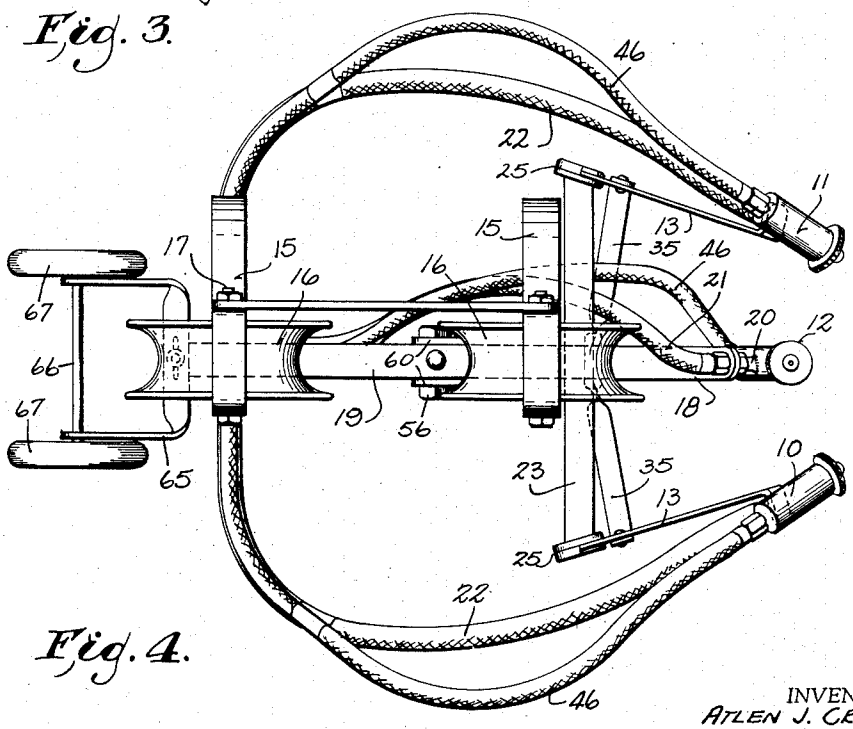

Fig. 4.

INVENTOR.
ATLEN J. CREPEAU

BY

Wheeler, Wheeler & Wheeler
ATTORNEYS

Aug. 19, 1941. A. J. CREPEAU 2,253,019

OVERHEAD CABLE SPRAYING APPARATUS

Filed Aug. 25, 1938 3 Sheets-Sheet 3

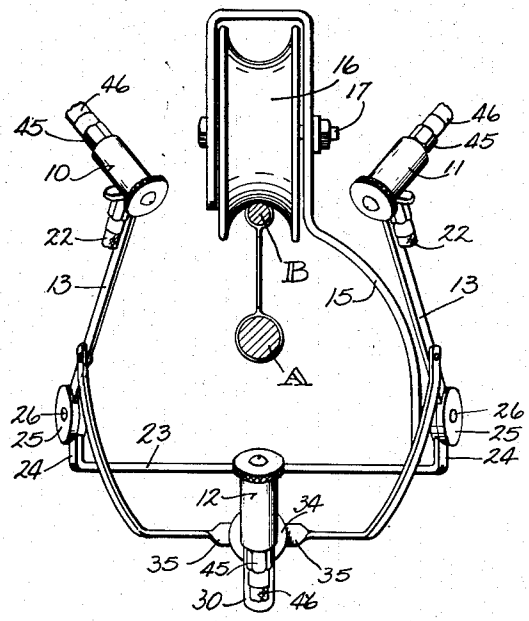

Fig. 5.

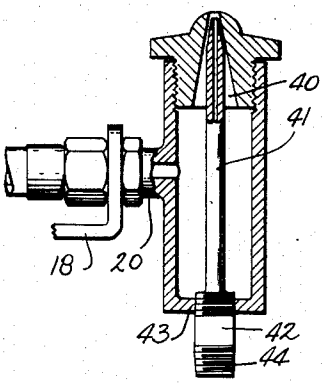

Fig. 10.

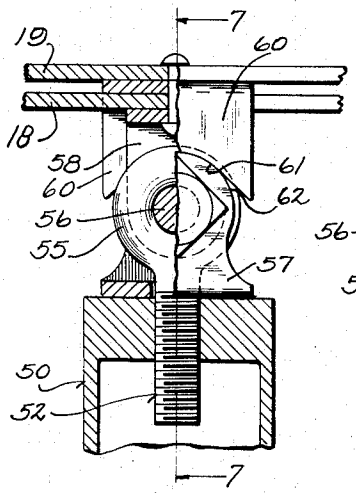

Fig. 6.

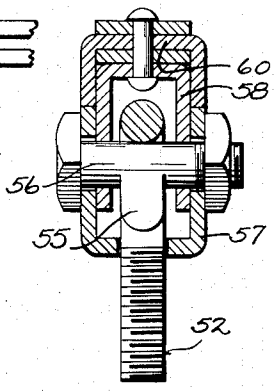

Fig. 7.

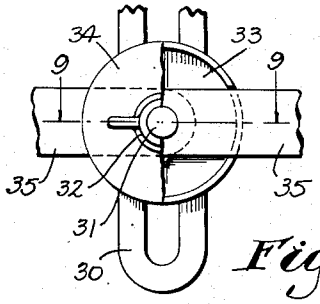

Fig. 8.

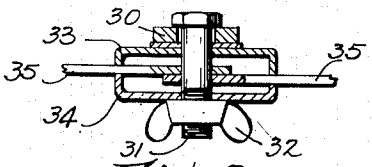

Fig. 9

INVENTOR.
ATLEN J. CREPEAU

BY

Wheeler, Wheeler & Wheeler
ATTORNEYS

Patented Aug. 19, 1941 2,253,019

UNITED STATES PATENT OFFICE

2,253,019

OVERHEAD CABLE SPRAYING APPARATUS

Allen J. Crepeau, Milwaukee, Wis.

Application August 25, 1938, Serial No. 226,619

10 Claims. (Cl. 91—45)

My invention relates to improvements in overhead cable spraying apparatus.

The general object of my invention is to provide improved portable means for spraying paint or other liquiform protective coatings upon all sides of an overhead cable or messenger wire from which the spraying nozzle may be suspended by means of a harp-like carrier adapted to be conveniently moved along the cable by an operator standing on the ground.

Also, my object is to provide means whereby such a nozzle carrier may be manipulated by means of a rod formed in one or more sections and adapted to be utilized to support air and paint tubes leading to the nozzles, and also for the purpose of elevating the carrier with its nozzles by pushing the same upwardly along a cable supporting pole until the pulley-like wheels of the carrier may be mounted upon the cable.

A further object is to provide means whereby the supporting rod may be rotatably adjusted to rigidly connect it with the carrier while the latter is being elevated, and then, by rotation in the opposite direction, allow a degree of free carrier movement of accommodation when the carrier is being propelled along the cable or messenger wire. Other objects are to provide improved nozzle supports and adjustable nozzles, whereby the delivery of liquiform material may be adequately regulated to suit the requirements of any given painting job.

In the drawings:

Fig. 1 is a general view in elevation, illustrating my improved apparatus as it appears when in use.

Fig. 2 is a view of the carrier and supporting rod as it appears when the carrier is being pushed upwardly along one of the cable supporting poles.

Fig. 3 is an enlarged view in side elevation showing the carrier, carrier nozzles, and associated parts suspended from a messenger wire, a fragment of the operating rod being illustrated in vertical section.

Fig. 4 is a plan view of the same with the messenger wire, cable, and operator's rod omitted.

Fig. 5 is a view of the parts illustrated in Fig. 3, showing the messenger wire and cable in cross section.

Fig. 6 is an elevation of an enlarged detail view of the connections between the operating rod and the frame of the carrier or harp.

Fig. 7 is a sectional view drawn to line 7—7 of Fig. 6.

Fig. 8 is a detail view of one of the clamps for the nozzle adjusting mechanism.

Fig. 9 is a sectional view drawn to line 9—9 of Fig. 8.

Figs. 10 and 11 illustrate modifications for coating vertical pipes associated with supporting posts.

Like parts are identified by the same reference characters throughout the several views.

In Figs. 1, 3, 4 and 5 I have illustrated a set of three nozzles 10, 11 and 12, mounted upon a carrier and disposed for convergent delivery to all sides of a pipe, wire or cable. The nozzles 10 and 11 are supported from the carrier frame by adjustable braces 13. The carrier frame has upright bars 15 upon the upper end portions of which trolley wheels 16 are mounted. The upper ends of the bars 15 are downturned to produce an inverted U-shaped structure at the upper ends of these bars 15, the trolley wheels being thus supported in positions offset from the lower, or vertical portions of the bars, whereby the pulleys may be swung into and out of engagement with a cable from one side thereof. The frame is of a generally hook-shaped structure with the open side unobstructed and exposing the space beneath the trolley wheels for reception of the overhead cable or supporting wire, the legs of which are apertured to receive bolts 17 upon which the trolley wheels 16 are journaled.

The lower ends of the bars 15 are elbowed their extremities being offset in the same direction as the pulleys, and to these elbowed portions longitudinally extending bars 18 and 19 are bolted these bars 18 and 19 are preferably directly underneath the trolley wheels and they extend underneath and parallel to the sable or wire upon which the trolley wheels are mounted when the device is in operation. The bar 18 has an upturned extremity at its front end to which the nozzle 12 is permanently secured, preferably by a tubular stud 20 on the barrel of the nozzle 12 (Fig. 10), through which a supply of paint or liquiform coating may be delivered to the barrel of the nozzle 12 through a flexible tube or hose 21. The stud 20 extends through the upturned end of the bar 18 to which it is clamped by clamping nuts in threaded engagement with the stud. The nozzle 12 is positioned to deliver the paint along an oblique line to the under side of the pipe, wire or cable A, the jet from this nozzle being substantially in the same vertical plane with the cable A, and adapted to deliver spray in an oblique upward direction along the line of travel of the carrier and against the under side of the cable this nozzle being supported by the harp-like carrier directly underneath the cable.

The nozzles 10 and 11 are supported by the braces 13 at opposite sides of the space directly above the cable, and are adjusted for convergent downward delivery of liquiform coatings to the top and sides of the cable. They receive the coating material from flexible tubes 22 in the same manner that the nozzle 12 receives such material from the tube 21.

The above described carrier frame, with its trolley wheels and nozzles, form a generally hook-shaped or open sided structure aptly termed a harp-like structure, because its central space is wholly open and unobstructed at one side. It preferably has its center of gravity in the open space substantially directly below the trolley wheels. Therefore it remains upright when hung upon the wire. The carrier is sufficiently balanced and of such light weight that it may be lifted or pushed upwardly along one of the cable supporting poles C and manipulated by means of the rod 50 to engage its trolley wheels with a cable or so-called cable supporting "messenger" wire. With rod 50 in a nearly vertical position the carrier can then easily be manipulated past the cable supporting posts C or other obstructions without loss of time, since by lifting the carrier the pulleys will be disengaged from the supporting wire or cable to allow the carrier to be moved laterally while passing the obstruction. Rod 50 may be swung forwardly to draw the carrier along the wire or cable, and by rotation it may be clamped to the carrier when the latter is to be otherwise manipulated, as hereinafter more fully set forth.

For convenience in description, the nozzle carrying end of the frame may be referred to as the front end. A cross bar 23 is secured between the front end of the bar 19 and the bar 18. It extends laterally on both sides as shown in Fig. 4 and has upturned ends 24 terminating in supporting disks 25 through each of which a pivot bolt or rivet 26 passes to connect the disk 24 with another disk carried by the lower end of the associated brace 13.

The braces 13 and their associated nozzles 10 and 11 may be adjustably swung upwardly and downwardly by the means now to be described. A bracket secured to the under surface of the bar 18 has a downwardly curving slotted arm 30. A clamping bolt 31 extends through the slot in this arm and is provided with a clamping thumb nut 32 between which the bolt passes through a set of clamping disks 33 and 34, each constituting the extremity of a link 35 pivoted to one of the braces 13. By loosening the thumb nut 32 the bolt 31 may be moved upwardly and downwardly in its slot, thus raising or lowering the braces 13 and their associated nozzles 10 and 11. When the nozzles are properly adjusted, the thumb nut 32 will be turned to clamping position.

The liquiform material delivered to the barrels of the respective nozzles as above described, is driven through the conically tapered nozzle outlets 40 by a jet of air supplied to these outlets by tubular needle valves 41 illustrated in Fig. 10. These needle valves are adjustably mounted in the end of the barrel by enlarged hub-like extensions 42 threaded into the end wall of the barrel as indicated at 43, and also threaded at 44 to receive the coupling 45 of a flexible air hose 46.

The means for lifting and manipulating the carrier along a messenger wire or cable will now be described.

An operating rod 50 has a threaded aperture at its upper end to receive an axially disposed coupling bolt 52, as shown in Fig. 3. This coupling bolt is connected to the frame bar 18 by an assembly of coupling members best shown in Figs. 6 and 7. The upper end of the coupling bolt carries an eye piece 55 through which a pivot bolt 56 is passed. This pivot bolt also passes through the U-shaped coupling member 57 and an associated inverted coupling member 58 of similar form. Coupling member 58 is capped by a yoke 60 having the general form of an inverted U with its lower ends or legs arched concavely as indicated at 61 in Fig. 6, to fit the rounded or convex upper surfaces 62 of the coupling member 57. By rotating the manipulating rod 50 in one direction, surfaces 61 and 62 may be brought into binding relation to each other, thereby rigidly locking the carrier to the rod 50 preparatory to lifting the carrier to a position upon the supporting messenger wire B or cable A.

To facilitate lifting the carrier I preferably provide one of the lower frame bars of the carrier frame, preferably the bar 19, with a forked bracket 65, Fig. 4, the arms of which are connected by a shaft 66 upon which wheels 67 are mounted. These wheels are adapted to travel upwardly or downwardly along one of the cable supporting poles C to prevent the carrier from swinging when it is being raised or lowered. When the carrier reaches a position where its trolley wheels may be mounted upon a supporting wire or cable, the manipulating rod 50 may be rotated for sufficient downward movement along the screw 52 to release the clamping engagement of the surfaces 62 and 61 of the coupling members 57 and 60. Thereupon the carrier may freely travel along a supporting wire or cable with all the necessary movements of accommodation to irregularities of surface such as may be produced by brackets or couplings connected with such wire or cable.

Supply pipes 70 and 71, Fig. 2, may lead from any suitable source of supply upwardly along the manipulating rod 50 to which these pipes are connected at suitable intervals by clips 74. These pipes will preferably lead from a supply tank 75 mounted upon a suitable truck 76. The paint pipe 70 may be extended downwardly nearly to the bottom of this tank 75, whereas the air pipe 71 will be connected to the top portion, the air being supplied under pressure from a compressor driven by a suitable motor, the compressor being conventionally indicated at 78, and the motor at 79, in Fig. 1.

The air in the tank 75 is utilized to place the liquiform coating material under pressure sufficient to force it to the nozzle outlets, the same air being also delivered to the tubular needle valves in the nozzle outlets for the purpose of spraying the liquiform material to the cable.

My invention is capable of considerable modification to suit varying requirements. In Figs. 11 and 12 I have illustrated a simplified structure designed for coating pipes D extending vertically along posts C. The manipulating rod 50*a* is bolted to a coupling member 57*a*, which has a bracket 80 to which the paint and air pipes 70 and 71 may be secured. The nozzles are supported directly from the axle 66*a* which carries the wheels 67*a* for travel along the pole C. The supply lengths of hose are respectively coupled at 81 and 82 to the flexible hose connections 22*a* and 46*a* respectively.

In the appended claims I do not limit the scope of my invention to the specific structures illustrated in the drawings, it being recognized that my invention may be embodied in various other modifications either intended for use in connection with identical cables, or in various other situations requiring overhead painting operations.

I claim:

1. Cable spraying apparatus comprising the combination of an open sided frame having trolley wheels offset to overhang space exposed at the open side and provided with nozzles for directing convergent jets to overhead cables and the like, a lifting and propelling rod connected to the carrier, and supply tubes for air and coating material extending along the rod and connected with the nozzles, said frame, supply tubes and nozzles constituting a structure substantially balanced upon the lifting rod and adapted to be manually adjusted in a lateral and vertical direction by means of the lifting rod to bring its trolley wheels into and out of engagement with the overhead cable or wire.

2. Cable spraying apparatus comprising the combination of an open sided trolley wheel carrying frame adapted to be transversely swung to bring its wheels into engagement with an overhead cable, with the closed side of the frame extending downwardly along one side of the cable, said frame being provided with nozzles for directing convergent jets to overhead cables and the like, a lifting and propelling rod connected to the frame, and supply tubes for air and coating material extending along the rod and connected with the nozzles, said carrier having means for adjusting some of the nozzles to vary the direction of jet delivery said frame, trolley wheels, and nozzles constituting a substantially balanced open sided structure, with its center of gravity substantially in a plane which includes the lifting rod and the line of trolley wheel travel.

3. In a portable spraying apparatus for overhead cables and the like, the combination of a harp-like carrier provided with trolley wheels, an upwardly inclined nozzle at one end of the carrier, laterally projecting arms for the carrier, provided with adjustable nozzle supporting braces, nozzles carried by said braces and obliquely pitched downwardly and inwardly toward a line intersected by the first mentioned nozzle jet, and clamping mechanism for adjusting and holding the braces with their associated nozzles in various positions of angular pitch.

4. In a portable spraying apparatus for overhead cables and the like, the combination of a generally hook-shaped nozzle carrier provided with trolley wheels, a lifting and propelling rod for said carrier, a coupling member connecting the rod with the carrier and with which the rod has threaded connection, a clamping member loosely mounted on the end of the rod, and a cooperative clamping member connected with the carrier, said clamping members being relatively movable into and out of clamping relation by rotation of the rod on said threaded connection to raise or lower the first mentioned clamping member.

5. In a portable spraying apparatus for overhead cables and the like, the combination of a harp-like carrier provided with tandem trolley wheels for suspending the carrier from overhead cables and the like, a projecting bracket on the carrier provided with wheels rotatable about an axial line at right angles with the line of travel of the trolley wheels, and a lifting rod for propelling the carrier upwardly along a pole on one set of wheels and along a cable on the trolley wheels.

6. Cable spraying apparatus, comprising the combination of a lifting rod having at its upper end a generally hook-shaped and substantially balanced carrier frame provided with trolley wheels overhanging the open side of the hook, nozzles supported by the frame in sufficiently offset positions to avoid interference with manipulation of the frame and its wheels into and out of engagement with an overhead cable or a cable supporting messenger wire, said nozzles being disposed for delivery of liquiform material to all sides of the overhead cable, and coupling means between the lifting pole and the carrier frame provided with clamping devices operable by rotation of the lifting rod to rigidly connect the rod with the frame for frame manipulating purposes, said rod being otherwise loosely connected with the frame.

7. Cable spraying apparatus, comprising the combination of a lifting rod having a nozzle carrier at its upper end provided with offset trolley wheels for suspending the carrier from an overhead wire or cable, said trolley wheels being engageable with the cable when lifted and laterally swung into position from one side thereof, nozzles supported from the carrier and adapted to direct convergent jets to the respective surfaces of a cable extending along the line of pulley travel, and flexible tubular connections extending along the lifting rod and adapted to deliver liquiform coating material from a grounded source of supply to the nozzles, whereby the carrier and its nozzles may be moved along the cable and swung by said lifting rod around cable supporting posts and other obstructions, said rod having a flexible connection with the carrier provided with means, operable by rotation of the rod in one direction, for locking it against flexion.

8. In apparatus for delivering liquiform coating material to all sides of an overhead cable, the combination with a frame provided with tandem trolley wheels at one side in a position to be lifted and swung laterally into and out of engagement with the cable, a lifting rod for raising and manipulating said frame, a loose connection between said rod and frame, clamping means at the upper end of the rod for rigidly securing it to the frame, and means for operating the clamping means from the lower end of the rod, whereby the rod, when loosely connected, may be utilized to propel the frame along a cable, and when rigidly secured, may be utilized to lift and laterally swing the frame to and from the cable.

9. In apparatus for spraying overhead cables, a nozzle carrier adapted to be suspended from such cables, a carrier manipulating rod, free at one end to be manually grasped and moved in any direction, a connecting bolt threaded to the other end of said rod and normally loosely coupled to the carrier, and clamping devices respectively supported by the carrier and the connecting bolt in positions for mutual engagement when the rod is rotated in one direction on the connecting bolt, whereby the rod may be rigidly connected to the carrier for carrier lifting purposes and partially released from the carrier by rotation in the opposite direction on said connecting bolt.

10. In a device of the character described, the

combination with a manually operable lifting and propelling rod, of a trolley type spray nozzle carrier normally loosely pivoted to one end of the rod, releasable interlocking means between said carrier and the pivoted end of said rod to prevent pivotal movement therebetween during carrier lifting operations, and means manually operable from the other end of the rod for releasing the interlocking means when the carrier is otherwise supported.

ATLEN J. CREPEAU.