July 8, 1941.

G. A. MOORE

2,248,579

CONTAINER

Filed April 10, 1937

2 Sheets-Sheet 1

FIG.1.

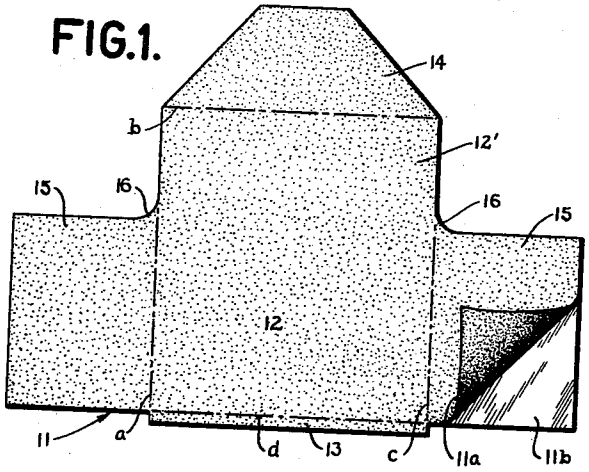

FIG.2.

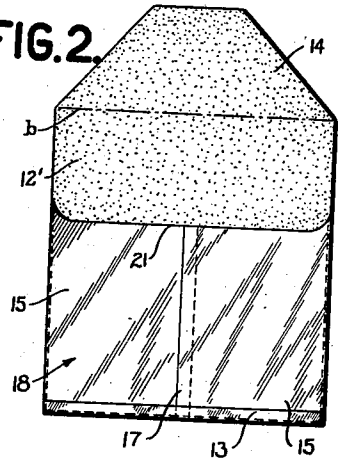

FIG.3.

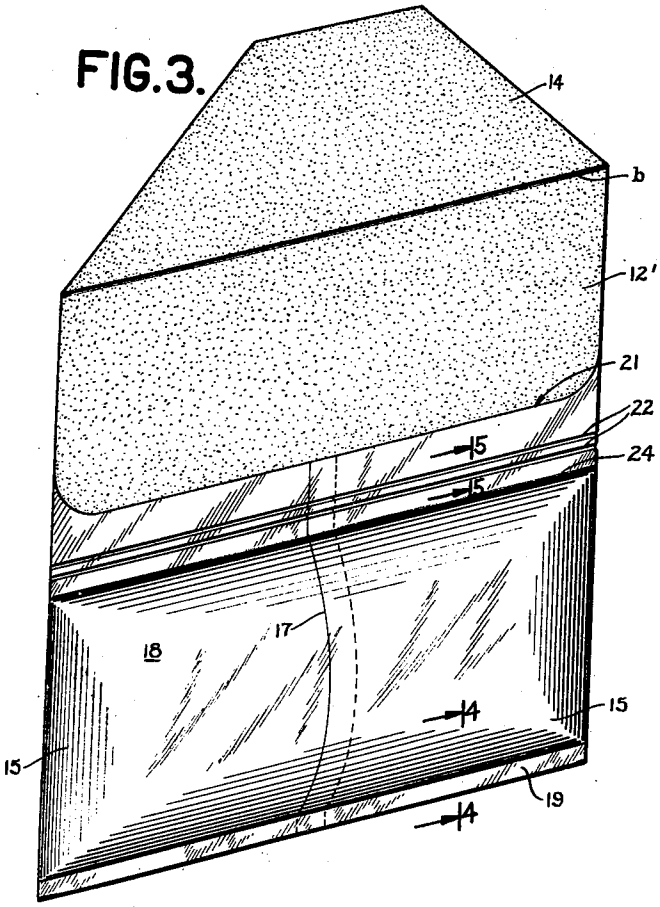

FIG.4.

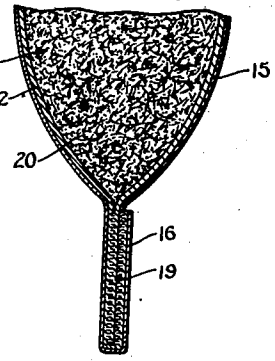

FIG.5.

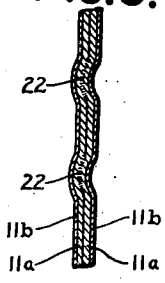

INVENTOR

George Arlington Moore

BY

F. Bascom Smith

ATTORNEY

July 8, 1941.

G. A. MOORE

CONTAINER

Filed April 10, 1937

2,248,579

2 Sheets-Sheet 2

FIG.7.

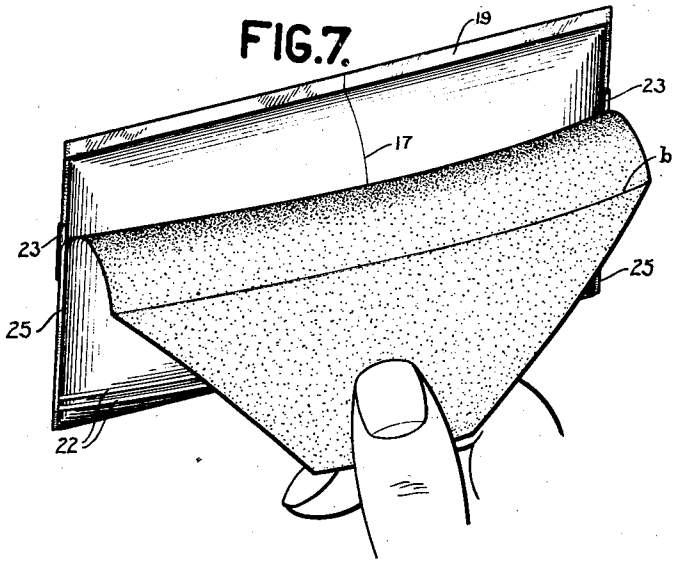

FIG.8.

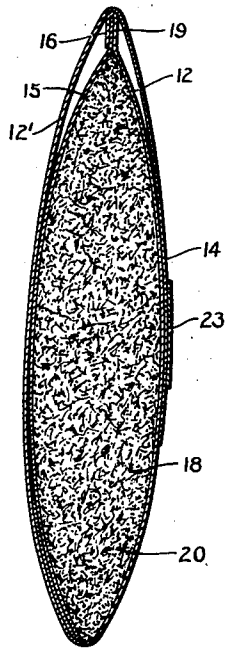

FIG.6.

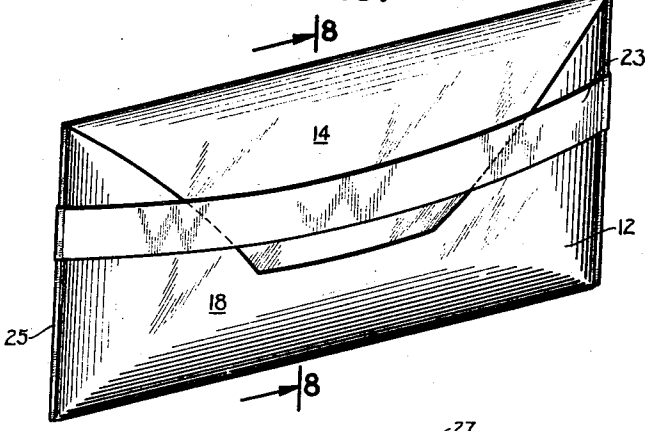

FIG.9.

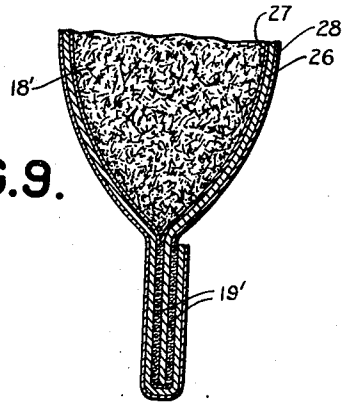

FIG.10.

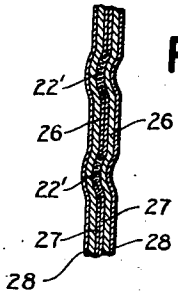

INVENTOR

George Arlington Moore

BY

F. Bascom Smith

ATTORNEY

Patented July 8, 1941 2,248,579

UNITED STATES PATENT OFFICE

2,248,579

CONTAINER

George Arlington Moore, Louisville, Ky., assignor to Humoco Corporation, Louisville, Ky., a corporation of Delaware

Application April 10, 1937, Serial No. 136,039

3 Claims. (Cl. 229—87.5)

This invention relates to containers and more particularly to containers of the flexible type which may be made from paper, foil, or like materials and which are adapted for use in packaging products, such as tobacco, for example.

One of the objects of the present invention is to provide a novel container for packaging commodities such as tobacco, whereby the packaged product will be retained in factory fresh condition for an extended period of time irrespective of the climatic conditions to which the same is subjected.

Another object is to provide a novelly constructed package comprising fibrous materials which is constituted by a pocket and an elongated closure flap, said pocket having a minimum number of seams and said seams being so located as to be subject to a minimum of destructive forces during the normal use of the pouch or package.

Still another object is to provide a novel container which is adapted for use in distributing a product contained therein as well as for use as a readily portable pocket package from which the contents may be readily and intermittently dispensed by a consumer.

A further object is to provide a container which may be constructed by folding and sealing in a novel manner a single blank which may be laminated from one or more blanks of paper, foil, or like materials, whereby a substance may be hermetically sealed to prevent the evaporation of moisture therefrom or the absorption of moisture thereby.

A still further object is to provide a novel package for products, such as loose-cut tobacco, which may be readily and inexpensively manufactured and which is of light weight and flexible, yet durable and reliable in use.

The above and further objects and novel features of the invention will more fully appear from the following detailed description when the same is read in connection with the accompanying drawings. It is to be expressly understood, however, that the drawings are for the purpose of illustration only and are not intended as a definition of the limits of the invention, reference being had primarily to the appended claims for this latter purpose.

In the drawings, wherein like reference characters refer to like parts throughout the several views,

Fig. 1 is a development of a blank which may be employed in constructing one form of container embodying the present invention, a corner portion of one lamination of said blank being turned back;

Fig. 2 is a front elevation of a container formed from said blank, the same being shown as it appears before it has been filled and sealed;

Fig. 3 is a similar view on an enlarged scale showing the container filled and the mouth thereof sealed;

Fig. 4 is a detail sectional view on an enlarged scale, the section being taken on line 4—4 of Fig. 3;

Fig. 5 is a detail sectional view on an enlarged scale, the section being taken on line 5—5 of Fig. 3;

Fig. 6 is an isometric view of the completed and filled container or pouch;

Fig. 7 is an isometric view showing the closure flap of the container being peeled back from folded position when initially opening said container;

Fig. 8 is an enlarged sectional view taken along line 8—8 of Fig. 6;

Fig. 9 is a sectional view similar to Fig. 4 illustrating a modified form of the invention; and,

Fig. 10 is a sectional view similar to Fig. 5 and showing a like portion of the modification of Fig. 9.

The embodiments of the invention illustrated in the drawings, by way of example, are particularly adapted for use in packaging tobacco, the same comprising, in general, a pocket in which the tobacco or other substance is hermetically sealed for distribution and sale, said pocket being so sealed as to be readily opened without the aid of tools and without destroying the material from which the same is made, and a closure flap which serves to strengthen the container during distribution and maintain the contents therein after the hermetic seal has been broken by the consumer. The pocket or pouch of the container is formed by folding a single blank and sealing predetermined surfaces thereof in a novel manner, said blank being preferably constituted by paper and metal foil laminations. The container or pouch is so constructed that the same may be conveniently and comfortably carried and the contents thereof readily and easily intermittently dispensed therefrom by the consumer. Tobacco and similar products may thus be inexpensively packaged and distributed for sale and use with assurance that the consumer will receive the same in factory fresh condition irrespective of the time interval between packaging and use and irrespective of any variations in the climatic conditions to which the package and contents are subjected during said interval.

The package or pouch, in the form shown in

Figs. 3 to 8, inclusive, is formed from a laminated blank 11 which comprises an inner or upper lamina 11*a* of fibrous material, such as paper, and an outer or lower lamina 11*b* of non-hygroscopic material, such as metal foil. Said laminae are intimately adhesively secured to one another throughout the areas of the engaging surfaces thereof. Paper lamina 11*a* is preferably constituted by a sheet of parchment paper which has been plasticized by treatment with glycerine, whereby the same is rendered soft and pliable yet durable, tenacious and less subject to tearing as well as moisture-repellant and, hence, less subject to being weakened when contacted by moisture. Parchment paper is adapted to carry up to twenty per cent glycerine. The entire inner or exposed surface of said paper lamina or a selected area thereof is preferably coated with a thermoplastic or heat-sealing lacquer or cement for the purpose of minimizing absorption by the paper of volatiles from the tobacco or other contents and to provide means for sealing the seams of the container in a manner to fully appear hereafter. One suitable thermoplastic lacquer which may be employed for this latter purpose is Du Pont No. 6303.

As illustrated, blank 11 comprises a central rectangular portion 12 defined by construction lines *a*, *b*, *c* and *d*, a narrow seam-forming or bottom flap 13, a portion 14 of trapezoidal shape and a pair of oppositely disposed side flaps 15, 15 which, for a purpose to appear hereafter, have curved portions or fillets 16 at the junctures of the upper edges thereof and the sides of the upper or flap portion 12′ of central area 12. To form the novel container from blank 11, flaps 15, 15 are each folded inwardly through 180° along lines *a* and *c*, the combined widths of said flaps being sufficient so that free edges thereof overlap, as seen in Fig. 2. The overlapped portions of flaps 15 are then subjected to the application of heat and pressure to form a vertical seam 17, the heat and pressure being effective to activate the thermoplastic coating on the inner surface of lamina 11*a* and to press the same into the interstices of the adjacent surfaces of the flaps. Flaps 15, 15 are thus made to constitute the front wall of the pocket or pouch 18 of the container.

Bottom flap 13 is then folded upwardly along line *d* to engage the lower, outer edges of folded flaps 15, 15 and heat and pressure are applied thereto to activate the thermoplastic coating on lamina 11*a* and, hence, to join the lower edge of front wall 15, 15 to flap 13 and to the lower marginal portion of area 12, the latter of which now constitutes the back wall of pocket 18. An impervious triple-ply seam 19 which constitutes the bottom of pocket 18 is thus formed. Seam 19, in addition to serving as a closure for the bottom of pocket 18, also functions to give enough longitudinal rigidity to the container to make it easier for the consumer to dispense the contents thereof. After pocket 18 has been filled with the desired contents 20, the front and rear walls of said pocket adjacent mouth 21 thereof are preferably pressed together or embossed and heat-sealed along one or more lines 22, the thermoplastic coating on the inner surface of lamina 11*a* serving as the binding medium. By thus embossing the engaging walls of pocket 18, the strength and longitudinal rigidity of the container are enhanced and relative slippage between the sealed surfaces and, hence, accidental destruction of the seam during normal handling is effectively prevented.

Preferably, a strap 23 (Fig. 6) which is operative, in a manner to appear hereinafter, for holding closure flap 12′, 14 in position when the latter is wrapped around pocket 18, is next secured to the container across back wall 12 thereof. Said strap may, of course, be secured in place before pocket 18 is filled and sealed, if desired. In the form shown, strap 23 is made of fibrous material and is slightly longer than pocket 18. The ends thereof extend around the ends of said pocket for a short distance and are adhesively secured to both the front and back walls thereof adjacent each end.

The upper portion of pocket 18 and the closure flap 12′, 14 are next wrapped around the remainder of said pocket and its contents in such manner as to conceal mouth 21, or, as will appear hereafter, to close said mouth after seal 22 has been broken. The closure flap may be of any desired length, the same, in the form shown, being of sufficient length, when the structure is folded along line 24 (Fig. 3), to permit flap portion 14 to extend around the bottom of pocket 18 and be tucked beneath strap 23, in the manner shown in Fig. 6. The edges of flap portion 12′ may be heat-sealed to the ends of the outer walls of pocket 18, if desired, in the manner indicated at 25 (Fig. 7) for the purpose of securing the flap in place and to facilitate handling of the container without danger of tearing the closure flap. Compressing and sealing the ends of the pouch and closure flap together at 25 also renders the container more rigid and strengthens the same.

When it is desired to use the contents 20 of the above-described container, flap portion 14 is pulled out from under hold-down strap 23 and then peeled back, in the manner illustrated in Fig. 7, until the parts are in the position shown in Fig. 3. By running the finger between the upper edge of front wall 15, 15 and flap portion 12′ or by grasping said upper edge between the fingers and pulling the front wall away from back wall 12, seals 22 may be broken without tearing the material of which the container is made. A string may be provided, for use in a manner well known in the art, for breaking seals 22, if desired. The tobacco may then be readily poured from pocket 18 into a cigarette paper or pipe or the same may be dipped from the pocket by means of a pipe. When the desired quantity of tobacco has been removed, closure flap 12′, 14 may be again folded around pocket 18 and tucked beneath strap 23, as seen in Fig. 6, to maintain the remainder of the contents therein until it is desired to use some more of the same.

As the contents are being removed in the above manner, or in any other suitable manner, the major stress on the material from which the pouch is made is that stress tending to separate and tear the opposite walls of pouch 18 along lines *a* and *c*. To prevent the tearing which is prevalent in prior art containers at the upper corners of pocket 18, the fillets or curved portions 16 are provided. Furthermore, instead of employing a vertical seam at one or both ends of pocket 12, as has been the practice heretofore, a pouch having a single vertical seam 17 is provided, said seam being located intermediate the ends of said pocket. The vertical seam being thus located is subjected primarily to a shearing stress, as distinguished from a parting or separating stress, and is accordingly less apt to fail during the removal of the contents.

If desired, a more sturdy, but more expensive, container may be provided by making the same

from a blank having a layer 26 of fibrous material sandwiched between two layers 27 and 28 of metal foil, portions of a container which is so constructed being shown in Figs. 9 and 10, said views corresponding to Figs. 4 and 5 of the first embodiment. When the blank is so constructed, the exposed surface of the inner foil lamina 27 or a selected area thereof is coated for a purpose to appear hereafter, with a thin, dry film of thermoplastic cement. Said cement should be non-hygroscopic and so constituted as to adhere readily to the foil laminations and bind the latter together when heat and pressure are applied thereto. One cement which has been found suitable is known as Reynolds Metals Company acetate lacquer No. TC-3, said lacquer having potential adhesive properties. This particular lacquer or cement becomes plastic and tacky at about 350° F., is soluble in alcohol or acetone, and is adapted to be readily applied to the foil laminations in the form of a thin, dry film by a roller coating method.

Thus, when the triple-ply blank is folded in the manner above described in connection with the first embodiment, the engaging surfaces of the side seam (not shown), the bottom seam 19', and the seams 22' across the mouth of the pocket 18' are all metallic thereby forming metal-to-metal seams which are thermo-plastically sealed by a non-hygroscopic lacquer. It will accordingly be apparent that no air or moisture can escape from or enter pocket 18' when it is so sealed. The non-hygroscopic, metallic inner wall 27 and the metal-to-metal seams prevent wicking of moisture to or from the tobacco or other contents through the fibrous component of the container walls.

The outer layer of foil on each of the above-described embodiments of the invention gives body to and strengthens the container and renders the same moisture proof and, in addition, gives the container a pleasing appearance and constitutes an excellent surface on which advertising matter or the like may be printed.

There is thus provided a novel container which may be inexpensively manufactured and which is of light weight and adapted to be comfortably and conveniently carried in the pocket of the consumer. Said container is so constructed that products, such as tobacco and particularly products of a hygroscopic nature which give up and absorb moisture readily, may be quickly and easily packaged so that the same will remain in factory fresh condition under varying climatic conditions for an indefinite period of time. A novel pouch is provided in which commodities may be distributed and sold and which may be used by the purchaser or consumer for carrying the packaged contents when it is desired to use the latter intermittently. Said pouch is so constructed as to facilitate handling and opening thereof without danger of tearing the same and to minimize the destructive effects of any stresses to which the materials and seams thereof are normally subjected during use.

Although only two embodiments of the invention have been illustrated and described in detail, it is to be expressly understood that the same is not limited thereto but that various changes may be made in the composition of the blanks and adhesives specified, as well as in the size and shape of the containers illustrated, without departing from the spirit and scope of the invention, as will now be apparent to those skilled in the art. For a definition of the limits of the invention, reference is had primarily to the appended claims.

What is claimed is:

1. A pouch for tobacco or other substances constituted by a blank of flexible material, said blank being folded to form a pocket and an elongated flap extending beyond the mouth of said pocket and folded around the same, the edges of a portion of said flap being adhesively secured to the outer walls of said pocket at the ends thereof, and a strap having the ends thereof secured between the outer walls of said pocket and said flap and being adapted to hold the free end of said closure flap in folded position.

2. A pouch for tobacco or other substances constituted by a blank comprising a layer of fibrous material and one or more layers of metallic foil adhesively secured thereto, one side of said blank having a coating of thermoplastic material thereon, said material having adhesive properties, said blank being folded to form a pocket for receiving said tobacco or other substances and a closure flap extending beyond the mouth of said pocket and adapted to be folded around the latter, one wall of said pocket being formed by infolded flaps having the edges thereof heat-sealed to each other and the bottom of said pocket being formed by a triple-ply seam having the plies thereof joined by said thermo-plastic coating.

3. A pouch for tobacco or other substances constituted by a blank of glycerine-treated parchment paper having a coating of thermoplastic material thereon, said blank being folded to form a pocket for receiving said tobacco or other substance and a closure flap extending beyond the mouth of said pocket and adapted to be folded around the latter, one wall of said pocket being formed by infolded flaps having the edges thereof overlapping and heat-sealed to each other, and the bottom of said pocket being formed by a triple-ply seam having the plies thereof joined by said thermoplastic coating.

GEORGE ARLINGTON MOORE.