Dec. 17, 1940. W. W. BROWN 2,225,153

MANIFOLDING APPARATUS

Filed April 21, 1939

FIG. 1.

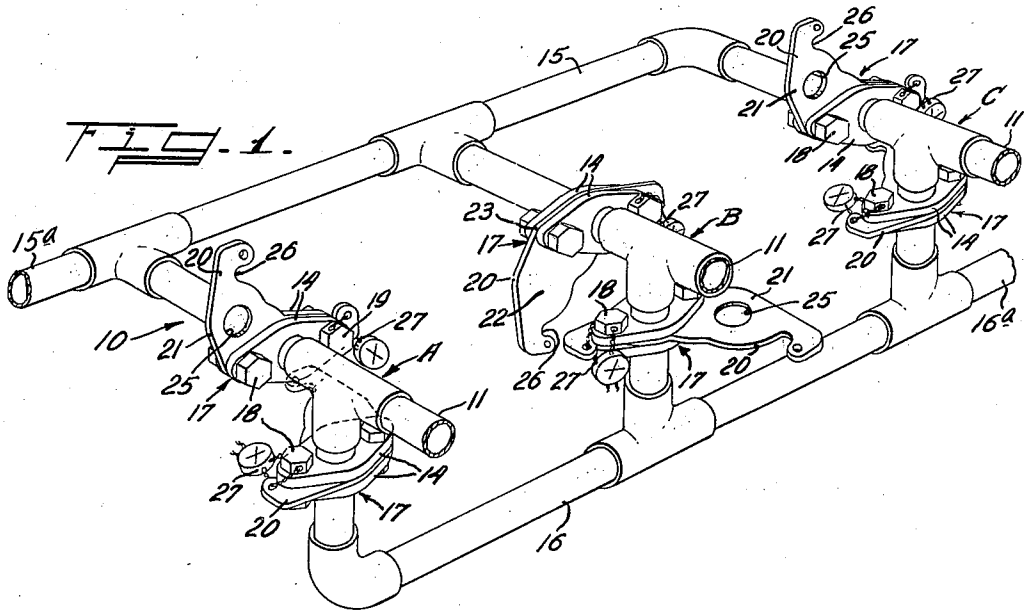

FIG. 2.

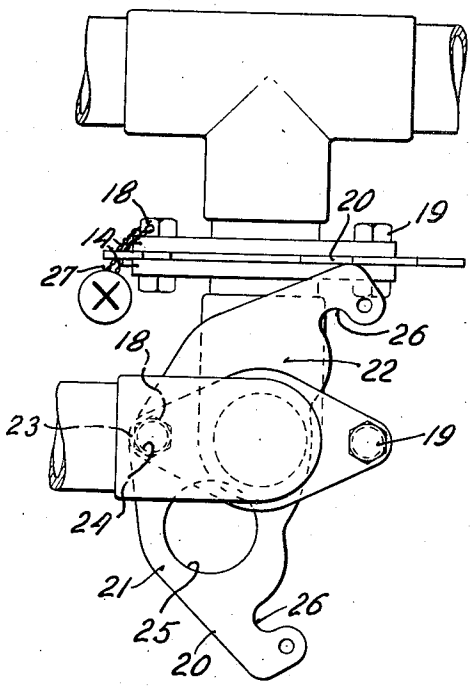

INVENTOR.
WALTER W. BROWN.
BY Oscar A. Mellin
ATTORNEY

Patented Dec. 17, 1940 2,225,153

UNITED STATES PATENT OFFICE

2,225,153

MANIFOLDING APPARATUS

Walter W. Brown, Berkeley, Calif., assignor to Ralph N. Brodie Company, Oakland, Calif., a corporation of California

Application April 21, 1939, Serial No. 269,105

8 Claims. (Cl. 277—4)

This invention relates to manifolding apparatus for dispensing fluid from multi-compartment tanks.

It is common practice to fill the different compartments of the tank of a tank truck with different fluids, or with different grades of the same fluid.

Therefore, it is the principal object of my present invention to provide an improved manifolding apparatus for such type tanks, which apparatus includes separate dispensing connections and enables the various compartments to be selectively connected with only one of the dispensing connections at the time of filling the compartments, so that the different types or grades of fluid will be dispensed separately through said dispensing connections.

One form which the invention may assume is exemplified in the following description and illustrated by way of example in the accompanying drawing, in which:

Fig. 1 is a perspective view of a manifolding apparatus constructed in accordance with the present invention.

Fig. 2 is a bottom plan view of a portion thereof showing one set of valves with one thereof preventing an opening actuation of the other.

Referring more particularly to the accompanying drawing, 10 indicates a manifolding apparatus for a multi-compartment tank such as used on tank trucks and the like. This manifolding apparatus has a plurality of tank discharge risers 11, one being provided for each separate tank compartment. Although only three risers 11 are shown, it is obvious that the number thereof may be such as to coincide with the number of compartments of the tank, or with the number of different tanks with which it is desired to use the present manifolding apparatus.

The manifolding apparatus includes two delivery manifolds 15 and 16, each of which having a separate delivery connection 15a and 16a so that they may be connected with separate meters or pumps as desired.

The discharge risers 11 are each connected with both manifolds 15 and 16 as illustrated so that the fluid from the tank compartments may be directed through the risers 11 to either manifold 15 or 16 for delivery as desired.

Between each discharge riser 11 and the manifolds are two valves 17, which valves, as will be described, enable fluid from the compartment connected with the riser to be selectively delivered to one of the manifolds 15 or 16, but prevent it from being delivered to both manifolds simultaneously.

From the drawing it will be seen that each valve 17 comprises a pair of aligned companion flanges 14, one having a tubular connection with the riser 11 and the other having a tubular connection with the adjacent manifold. At opposite sides the flanges 14 are complementally drilled to receive connecting bolts 18 and 19 to connect the flanges. Interposed between the flanges 14 is a flat valve plate 20 having two integrally formed portions 21 and 22 substantially complemental in contour and dimensions to the faces of the flanges 14. These portions 21 and 22 are divergently arranged at approximately ninety degrees apart, one end 23 thereof being common to both portions. At this latter end 23 is a bore 24 receiving the flange connecting bolt 18 so that when the bolts 18 and 19 are loosened, the entire valve plate 20 may pivot about the bolt 18.

The valve plate portion 21 is formed with a circular port 25 which coincides with the bores of the flanges and their tubular connections, when the valve portion 21 is in register with the flanges, so as to permit fluid to flow between the two tubular connections of the flanges 14. However, the other valve portion 22 is blank, as illustrated, so that when it is in register with the flanges, the flow of fluid between the tubular connections of the adjacent flanges is shut off.

At the end of each valve portion 21 and 22 opposite the pivot bore 24 are formed opposed semicircular recesses 26 which are spaced from the bore 24 sufficiently so that when either of the valve portions 21 and 22 is moved into register with the flanges 14, the recess 26 therein registers with and embraces the flange connecting bolt 19. Due to the fact that the recesses 26 are opposed, the valve plate 20 can only pivot through an arc of a length equal to the distances between the recesses 26. Consequently, it is obvious that when the valve plate 20 is positioned with its portion 21 in register with the flanges 14, fluid from the associated riser 11 may discharge through the valve into the manifold connected with the latter, but when the valve plate 20 is positioned with its portion 22 in register with the flanges 14, no fluid may pass between the associated riser and the manifold.

It should be pointed out here that the manifolds are arranged at ninety degrees apart so that the connections in which the valves 17 are interposed between each riser and the manifolds are likewise arranged ninety degrees apart. The valves are so spaced and located in these con-

nections that only one valve may be open at a time. This is due to the fact that when one valve is open, its projecting blank portion **22** is interposed in the path of the valve plate **20** of the other valve of the same riser, and prevents the same from being moved to a position where the port **25** in its portion **21** will register with the ports of the flanges. Therefore, it is obvious that fluid from a selected riser **11** can only be delivered to one manifold at a time.

In actual operation, the manifolding apparatus here disclosed is constructed substantially as described, and the risers **11** are each connected with a separate compartment of a tank or with separate tanks. Assuming that the compartment or tank connected with the riser connection B is filled with stove oil and that the compartments connected with the riser connections A and C are filled with gasoline, it is necessary that the gasoline only be dispensed through the manifold **16** and that the stove oil only be dispensed through the manifold **15**. In this case, when the tanks or compartments are filled, the operator opens the valve of the connection B, which leads to the manifold **15**, and seals it in this position by a wire and seal **27** connecting the valve plate **20** with the bolt **19**, which seals the valve in open position. The other valve in the connection B is closed and sealed in this closed position in the same manner, as illustrated. This latter valve cannot be opened due to the fact that when the adjacent valve of the set is opened, its blank portion depends in the path which must be taken by the valve plate of the other valve in its opening movement, and prevents the latter from being placed in open position, as illustrated in Fig. 2. Consequently the operator cannot possibly leave both valves open at the same time.

In the case of the connections A and C, the valves interposed between them and the manifold **16** are open and sealed in such position, and the valves interposed between such connections and the manifold **15** are closed and sealed in such position so that the compartments containing gasoline can only discharge their contents into the manifold **16** for delivery.

It should be pointed out here that when it is desired to shift the valve plate **20** of any of the valves, it is necessary to loosen the bolts **18** and **19** and then move the valve to desired position and then retighten the bolts to prevent leakage.

If desirable or necessary, suitable apertured gaskets may be provided on one or on opposite sides of each valve plate.

From the foregoing it is obvious that my invention is of considerable utility because tank trucks having a multiplicity of compartments frequently carry one grade of fluid in some of the compartments and a different grade or type of fluid in the other compartments. In my improved manifolding apparatus the possibility of error in delivering the wrong fluid is almost entirely eliminated because when the tank compartments are filled, the filler opens and closes the proper valves and seals them in this position so that when dispensing from the truck, only one type of fluid will be dispensed from one meter or pump and the other type of fluid only be dispensed from the other meter or pump. Likewise, the filler cannot possibly connect any one compartment with both pumps or meters because, as previously described, only one valve of a set can be opened at a time.

In practice, as soon as one compartment is filled, the filler opens the proper valve and closes the other and seals them in this position. Therefore, regardless of what tanks are filled with the different fluids, only one type may be dispensed from one pump or meter and another type of fluid from the other pump or meter.

It is well known that, through error, gasoline or other high volatile oil has been delivered to a consumer in place of stove oil or other low volatile oil, and that by reason of leaking control valves on delivery trucks permitting an intermixing of different oils, mixtures dangerous for use by consumers of low volatile oils have frequently been delivered. So many serious accidents and fires have resulted from such errors of delivery that certain states have passed laws forbidding the delivery of both high and low volatile oils by the same tank truck.

A contributing cause for the passage of such laws has been the fact that heretofore there has been available no delivery apparatus which would provide adequate assurance against such errors of delivery.

Obviously since the distributing valves **17** of the apparatus above described are sealed at the filling depot, and consequently against operation by the truck driver or by any unauthorized person, there will be adequate assurance that each delivery manifold will discharge only the one kind of oil as intended by the filling depot official, and that the distributing valves will not be manipulated to deliver a dangerous mixture of two or more different kinds of oil.

A further assurance against intermixing of different kinds or grades of oils resides in the use of plate valves of the character herein disclosed. With the ordinary types of valves embodying closed valve housings, failure of the valve member to seat properly will cause leakage which will pass directly to the discharge side of said valve. The employment of such valves in the present instance would, in the case of leakage, permit intermixing of the oils and faulty distribution thereof to the manifolds.

In the disclosed apparatus, leakage at any valve cannot pass from the inlet to the outlet side of the valve, but will escape between the closed valve plate **20** and the adjacent flange **14**, to the atmosphere. Such leakage, which would most ordinarily be due to a slight loosening of the clamping bolts **18**, **19**, would provide a visual indication thereof, and could in most cases be stopped by a tightening of such bolts by the truck driver.

While I have shown the preferred form of my invention, it is to be understood that various changes may be made in its construction by those skilled in the art without departing from the spirit of the invention as defined in the appended claims.

Having thus described my invention, what I claim and desire to secure by Letters Patent is:

1. In a manifolding apparatus, a pair of tubular members each including a pair of opposed separable flanges, a valve plate disposed between each pair of flanges and operable transversely of flow passage thereof to open or closed positions, said valve plates being relatively disposed so that either of them when in open position provides a stop preventing an opening movement of the other, and means for clamping each valve plate in set position between its associated pair of flanges.

2. In a manifolding apparatus, a pair of tubular connecting members each including a pair

of opposed separable flanges, a pair of clamp bolts for each pair of flanges extending through aligned apertures therein, and a transverse valve plate disposed between each pair of flanges and pivoted on one of the associated bolts for swinging movement to open or closed positions, said valve plates and the associated flanges being relatively disposed so that when either valve plate is in an open position it provides a stop preventing an opening movement of the other valve plate.

3. In a manifolding apparatus, a pair of tubular connecting members each including a pair of opposed separable flanges, a valve plate disposed between each pair of flanges and operable transversely of flow passage thereof to open or closed positions, said valve plates being relatively disposed perpendicular to each other so that either of them when in open position provides a stop preventing an opening movement of the other, and means for clamping each valve plate in set position between its associated pair of flanges.

4. In a manifolding apparatus, a pair of tubular connecting members each including a pair of opposed separable flanges, a pair of clamp bolts for each pair of flanges extending through aligned apertures therein, and a transverse valve plate disposed between each pair of flanges and pivoted on one of the associated bolts for swing ing movement to open or closed positions, said valve plates and the associated flanges being relatively disposed perpendicular to each other so that when either valve plate is in an open position it provides a stop preventing an opening movement of the other valve plate.

5. In a manifolding apparatus, a pair of tubular connecting members each including a pair of opposed separable flanges, a valve plate disposed between each pair of flanges and operable transversely of flow passage thereof to open or closed positions, said valve plates being relatively disposed so that either of them when in open position provides a stop preventing an opening movement of the other, means for clamping each valve plate in set position between its associated pair of flanges, and means for sealing each valve plate in set position against unauthorized actuation.

6. In a manifolding apparatus, a pair of tubular connecting members each including a pair of opposed separable flanges, a pair of clamp bolts for each pair of flanges extending through aligned apertures therein, a transverse valve plate disposed between each pair of flanges and pivoted on one of the associated bolts for swinging movement to open or closed positions, said valve plates and the associated flanges being relatively disposed so that when either valve plate is in an open position it provides a stop preventing an opening movement of the other valve plate, and means for sealing each valve plate in set position against unauthorized actuation.

7. In a manifolding apparatus, a pair of tubular connecting members each including a pair of opposed separable flanges, a valve plate disposed between each pair of flanges and operable transversely of flow passage thereof to open or closed positions, said valve plates being relatively disposed perpendicular to each other so that either of them when in open position provides a stop preventing an opening movement of the other, means for clamping each valve plate in set position between its associated pair of flanges, and means for sealing each valve plate in set position against unauthorized actuation.

8. In a manifolding apparatus, a pair of tubular members each including a pair of opposed separable flanges, a pair of clamp bolts for each pair of flanges extending through aligned apertures therein, a transverse valve plate disposed between each pair of flanges and pivoted on one of the associated bolts for swinging movement to open or closed positions, said valve plates and the associated flanges being relatively disposed perpendicular to each other so that when either valve plate is in an open position it provides a stop preventing an opening movement of the other valve plate, and means for sealing each valve plate in set position against unauthorized actuation.

WALTER W. BROWN.