May 28, 1940.

V. W. STRODE

2,202,123

VACUUM PREVENTER

Filed Jan. 8, 1939

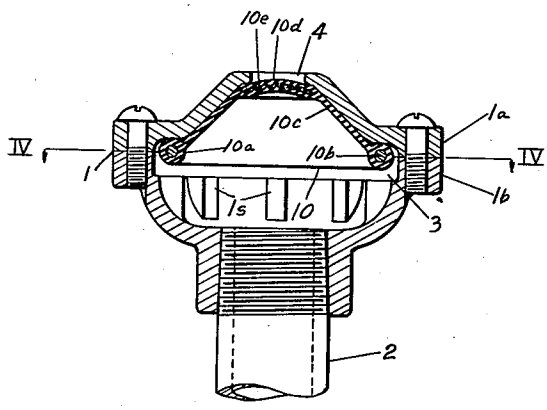

Fig. I

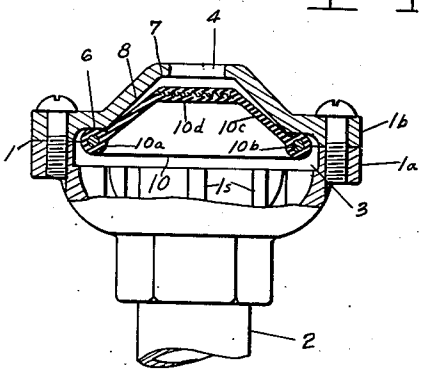

Fig. II

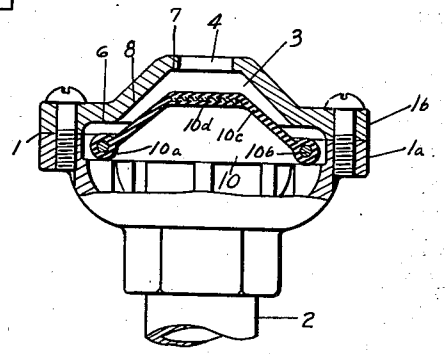

Fig. III

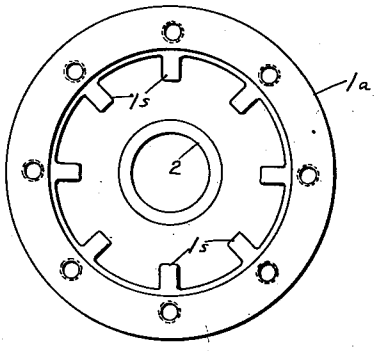

Fig. IV

INVENTOR
VICTOR W. STRODE
BY
ATTORNEY

Patented May 28, 1940

2,202,123

UNITED STATES PATENT OFFICE

2,202,123

VACUUM PREVENTER

Victor W. Strode, Portland, Oreg.

Application January 8, 1938, Serial No. 184,016

9 Claims. (Cl. 251—119)

This invention relates to vacuum preventers for receptacles utilized for holding fluids under pressure, of which a water distribution piping is an example, where a vacuum of any degree will be detrimental.

To avoid cross-connections incident to plumbing systems, it is important that when the water pressure falls in a water piping system that vacuum therein of any degree be prevented to prevent contamination being drawn into the water supply system. Practically all plumbing codes provide for such devices.

Since such a device may and usually does stay in the closed position for several months to a year or more, there is great danger that corrosion, or the natural tendency of rubber to stick to a valve seat, will allow a vacuum of substantial degree to be established when a stop-and-waste cock is opened, when a fire engine makes a heavy draft on a hydrant in the neighborhood, or when any other of the quite numerous causes for reducing the water pressure shall occur.

Valves or seats of rubber or rubber composition seem to be the only alternative to ground joints, which are likewise prone to stick.

An object of the present invention is the employment of a valve that stretches materially under the influence of pressure as it is forced to its seat so that the inherent resiliency of rubber will rip it loose again should there be any sticking tendency.

Another object of the invention is a valve that normally falls open in the absence of pressure so that it actually opens just before the pressure in the receptacle reaches atmosphere pressure.

A highly important object of the invention is to provide means for trapping and hermetically sealing in a film of moisture, between the rubber valve and its seat, over the greater portion of the area of contact, to prevent sticking.

Another object is a structure, principally of rubber, that is adapted to be forced into position on a plurality of seats in such manner that each and every small unit of surface that contacts a seat does so under tension, hence distorted, so that it will rip itself loose by the tendency of the rubber to return to its original shape when the pressure falls, completing the process and completely counteracting any sticking tendency before the pressure against it has reached the atmosphere pressure point.

I attain the objects sought and others that will be apparent by the structure illustrated in the accompanying drawing in four figures and described in the subjoined specification.

In the drawing—

Fig. I is a vertical section of my vacuum preventer shown attached to a pipe nipple which will be presumed to be a part of a water supply system in a building;

Fig. II shows the same structure as Fig. I, partially in section, with the single working part in a different position;

Fig. III is again the same structure shown in Figs. I and II with the working part in the position it will take when no pressure above that of the atmosphere exists in the pipe system and no fluid is present; and

Fig. IV is a cross section on the line IV—IV of Fig. I.

In the drawing, **1** is a body for attachment to a receptacle, such as the pipe nipple **2**, that is provided with an interior valve containing space **3**. For convenience the body **1** is made in two parts, a base **1***a* and a cap **1***b*. The body **1** is provided with an air inlet opening **4** and interiorly it is provided with a plurality of valve seats such as **6**, **7** and **8**.

A valve **10** is provided that is, in general form, an inverted cup of rubber or other stretchable material having the well known characteristics of rubber, the word rubber being used with this inclusive meaning. Only a sectional view of the valve **10** is shown as it will be symmetrical, hence is fully disclosed in the sectional view.

The valve **10** must be made as an inverted cup to realize the virtues of my present invention, but may otherwise vary in general outline. It is preferred to be made as follows, as this is a very efficient form, from present experience.

The valve comprises, a rim portion or bead **10***a*, having moulded within it a metal ring **10***b*, sidewalls **10***c* that converge and finally join, and a top portion **10***d* that is somewhat larger than the air inlet opening **4**. Imbedded in the top portion **10***d*, I prefer to place a disc of fabric **10***e*, such as is commonly used in making diaphragm material, as is well known; or the top portion may be made stronger than the side walls **10***c* by being made thicker; or in any other or preferred manner so that it is stronger and less stretchable than the sidewalls.

By construction of the inverted cup valve in this manner the metal insert **10***b* serves a double purpose, to prevent contraction of the rim under stress of pressure and to weight the cup. By weighting the cup, water, when it enters the valve chamber, will reach a level above the rim before the cup floats and a small quantity of water will

be trapped above the rim; then as pressure increases the top portion of the valve, indicated by 10*d*, will reach its seat 7, somewhat before the stretchable sides 10*c* are forced outwardly into contact with the valve seat portion indicated by 8; hence a film of water that has been trapped in the space above the rim 10*a* will be hermetically sealed in to effectually prevent sticking.

The air inlet opening 4 may be divided into several separate holes but it is not as good.

It will be particularly noted that when unstretched, as shown in Fig. III, the sidewalls are of a different angle than the cooperating valve seat 8 with which they are to contact when under pressure. This is important.

Interiorly the base 1*a* is provided with multiple supports 1*s* upon which the bead portion of the valve, 10*a*, rests when conditions are as described for Fig. III. Also the interior space 3 is so formed that when the valve is placed in position between 1*a* and 1*b* it cannot become displaced so that it will not operate properly when assembled in proper position as shown in the first three figures.

Upon access of liquid to the receptacle 2 and its flowing into the space 3, air will be trapped underneath the inverted cup valve member 10 and it will float from the position shown in Fig. III to that shown in Fig. II as a first movement. The top of the bead 10*a* will contact the valve seat 6 and make a fairly good seal if the valve has been properly made, the seal improving as pressure builds up.

There will be a bulge of the reinforced top of the cup, as shown in Fig. I, due to pressure. This bulge will always pulsate, every time pressure is lowered due to draft of water, hence sticking at this point due to long continued pressure is not to be expected.

Pressure in water supply systems is variable, affected by two things, pressure head and flow friction due to use, therefore the pressures are never at rest at any point, for more than momentary intervals, hence my stretchable valve that stretches more with high pressure and restores itself at low, will never be at rest when connected to such a system, and cannot stick since the sticking of a rubber valve to its seat is due to chemical action requiring time.

It will be noted that the metal ring 10*b* is to all intents incompressible when uniformly loaded as is provided for, but the material of the bead 10*a* will give a bit under the load applied by the stretching of the sidewalls 10*c* so that when the valve as a whole is in the position shown in Fig. I, each unit of valve surface that is in contact will be stretched to a greater or less degree.

When pressure starts to fall within the body 1, the inverted cup valve immediately begins to restore itself to its original shape, not waiting until the pressure reaches that of the atmosphere. If it has stuck at any point, it will strip itself loose, progressively as the pressure falls, until when the pressure reaches that of the atmosphere it is completely loose and ready to fall to the position shown in Fig. III.

Variations in shape are possible within limits, hence the drawing is used as illustrative and not as limiting. What I claim as my invention is to be ascertained by the following claims.

1. A vacuum preventer, comprising a body provided with an air inlet opening, a plurality of valve seats axially arranged adjacent the inner terminus of said opening and an inverted cup valve member having a relatively rigid perimeter and elastic cup walls that is adapted to contact one of said plurality of valve seats under the influence of internal liquid pressure and be stretched into engagement with the other seats of said plurality upon increase of internal pressure.

2. A vacuum preventer for receptacles comprising a body that is provided with an interior valve containing space and an air inlet opening through an outside wall, a plurality of valve seats interiorly arranged in said body in coaxially arranged relationship adjacent said opening and an inverted elastic cup valve member having a relatively rigid perimeter that is adapted to contact the lowermost of said valve seats under the influence of liquid rising in the body and to be stretched into engagement with the other seats upon accumulation of pressure of said liquid.

3. In a vacuum preventer, a chamber provided with an air inlet, plural valve seats in the chamber that are axially arranged to cooperate with a valve for controlling the inlet and an inverted cup shaped valve having a relatively rigid rim and elastic walls in cooperative relationship to said seats, the said valve being characterized by being arranged to contact one of said valve seats first and to then be stretched into contact with others of said seats.

4. In a vacuum breaker of the character described, a body member, a chamber formed in said body member with convergent top walls and an axial vent opening and a cup shaped rubber valve member supported below the top walls and vent that is adapted to float into engagement therewith upon access of water therebeneath, the said cup shaped rubber valve being characterized by a convergent top wall of lesser pitch than the mating wall of the chamber.

5. A stretchable valve for a vacuum breaker of the character described comprising a stretchable inverted cup shaped member provided with a top closure made integral therewith, said top closure being reinforced, a relatively thin water impervious wall therebeneath, and a reinforced valve portion beneath the thin wall that is adapted to function as a valve against a circular seat, the whole being arranged to float the said valve portion into contact with a valve seat upon access of water therebeneath.

6. A vacuum preventer device comprising a body that contains a top vented chamber, a stretchable inverted cup shaped valve in said chamber that is arranged to float into covering position with respect to the vent upon access of liquid therebeneath, said vented chamber having a broad valve seat below the vent that is so proportioned with respect to the valve that its most distant part from the vent is contacted by the floating valve first and the complete closure is effected by the valve stretching into engagement with the remainder of the seat under the influence of liquid pressure.

7. A vacuum preventer defined as a body member adapted for connection to a water supply system and having a top vented chamber formed therein, an inverted cup shaped resilient valve in said chamber that is normally supported below the vent and is adapted to float into closing relationship therewith upon access of water therebeneath, said vacuum preventer characterized by normally non-conforming internal surfaces in the chamber and external surfaces on the in-

verted cup whereby the cup is forced to complete the closure by stretching into conformity upon access of water pressure therebeneath.

8. A vacuum preventer comprising a hollow top vented body, means for connecting the lower part of the body to a water supply conduit, a cup-shaped valve of stretchable material in the hollow body that is normally sustained below the vent and adapted to float upwardly upon access of water from beneath, the inner surface of said body being characterized by a plurality of axially arranged valve seats so positioned that the valve will contact the lowermost thereof first and be stretched into contact with the higher under influence of water pressure inside the cup of the valve.

9. A valve body that is provided with a vertical inner chamber terminated by a convergent top wall that is provided with a central vent opening, an inverted cup-shaped valve member of stretchable material in said chamber that is normally supported out of contact with the chamber walls, the said inverted cup-shaped valve being adapted to float into contact with a lower part of the convergent wall upon access of fluid therebeneath and be stretched into contact with the upper portion thereof upon access of fluid pressure.

VICTOR W. STRODE.