Nov. 28, 1939. J. OSTER 2,181,282

VIBRATOR

Filed Dec. 9, 1937 3 Sheets-Sheet 1

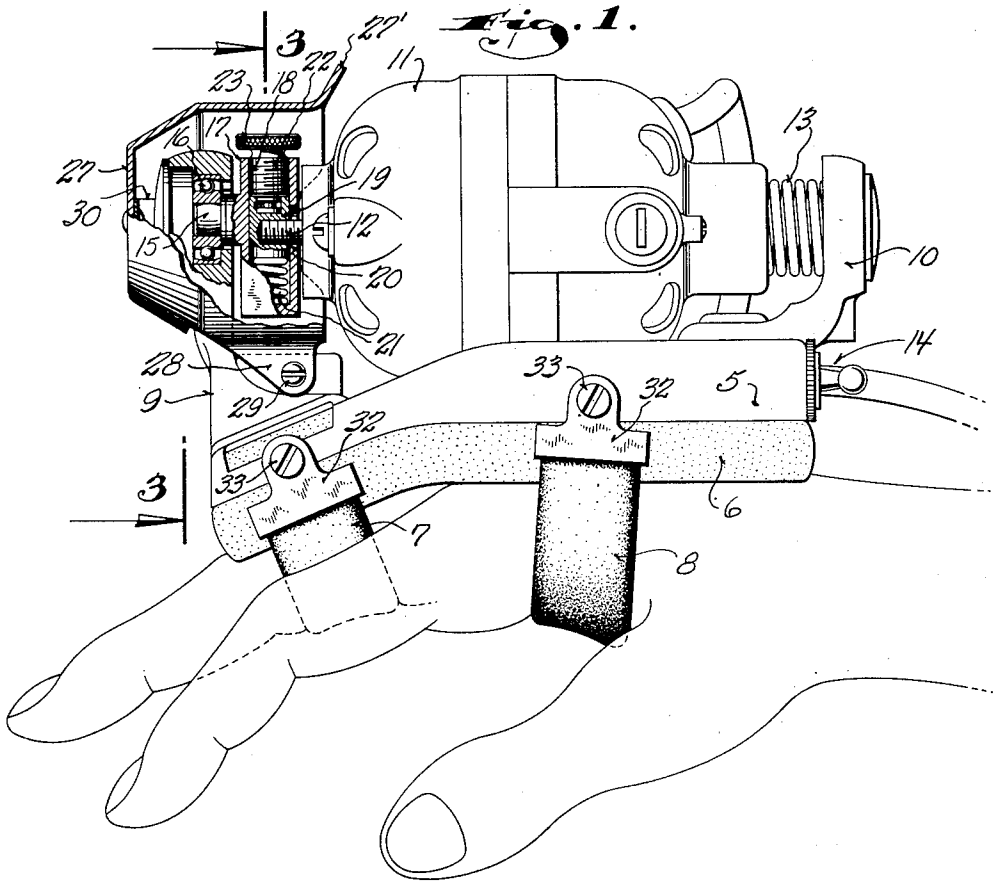

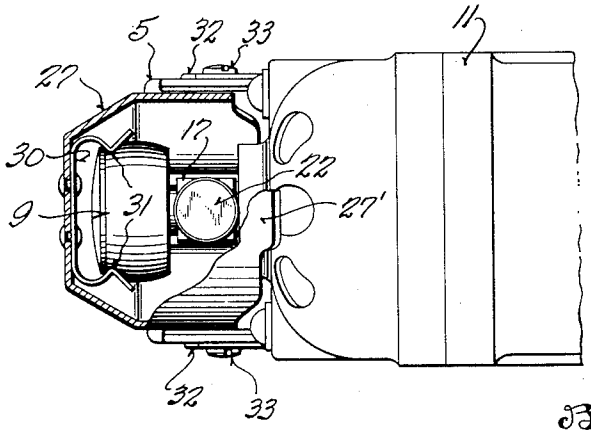

Fig. 2.

Inventor
John Oster
By Dwight Jones
Attorney

Nov. 28, 1939. J. OSTER 2,181,282

VIBRATOR

Filed Dec. 9, 1937 3 Sheets-Sheet 2

Fig. 4.

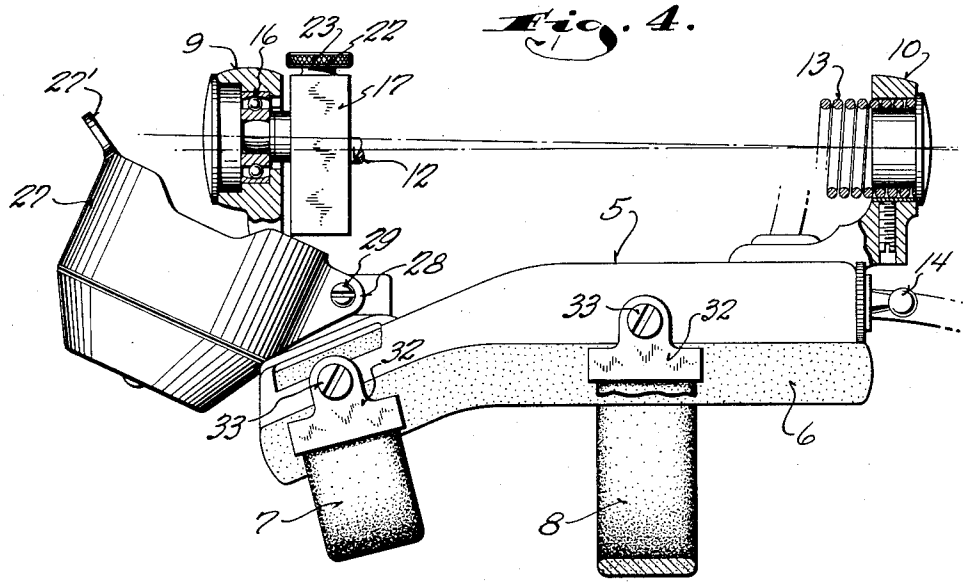

Fig. 3.

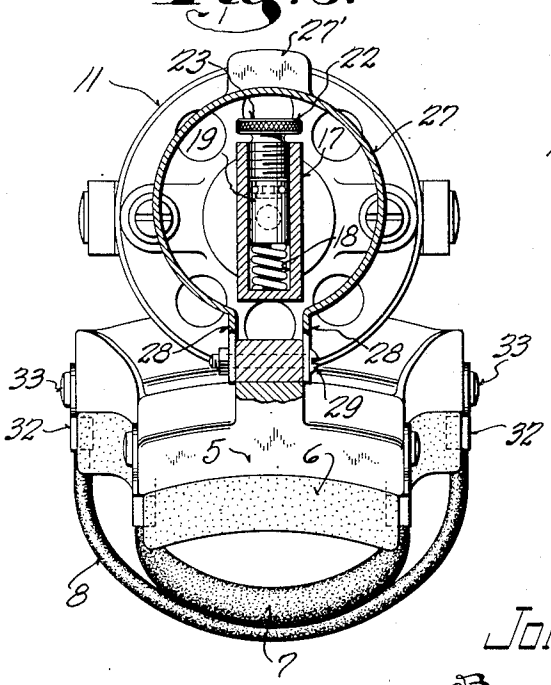

Fig. 5.

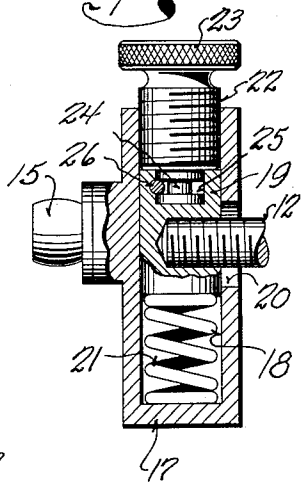

Inventor
John Oster
By Darlington Jones
Attorney

Nov. 28, 1939. J. OSTER 2,181,282

VIBRATOR

Filed Dec. 9, 1937 3 Sheets-Sheet 3

Fig. 6.

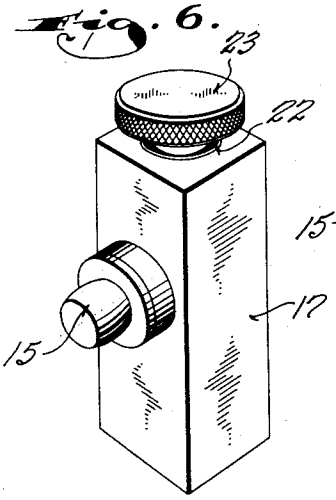

Fig. 7.

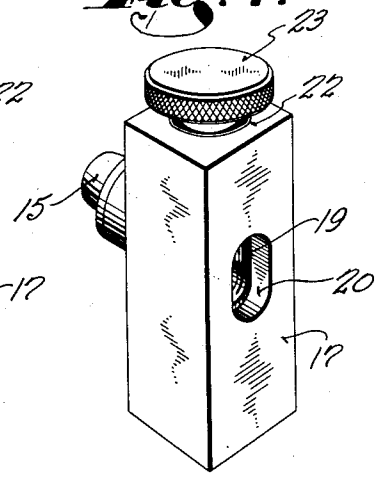

Fig. 8.

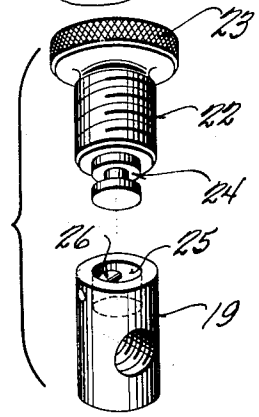

Fig. 9.

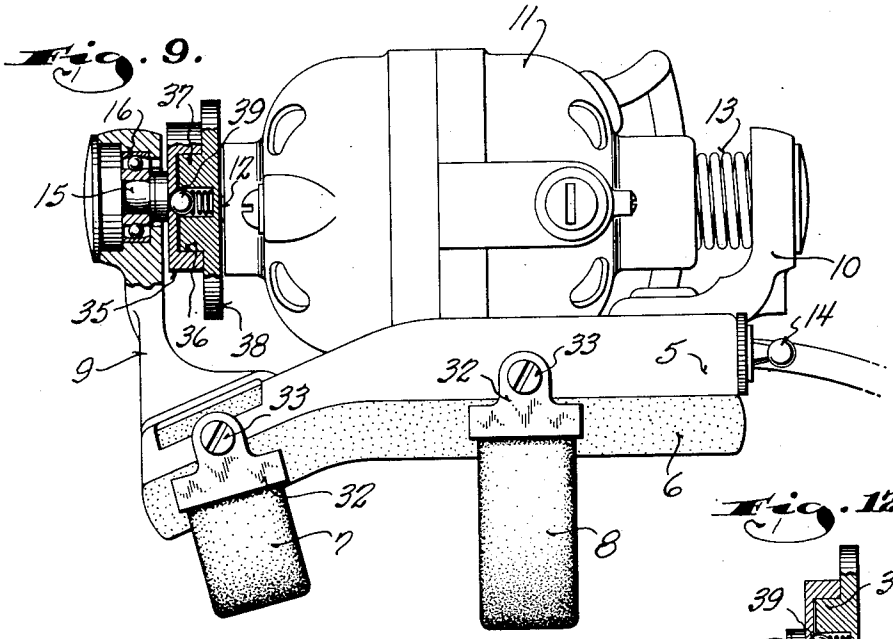

Fig. 12.

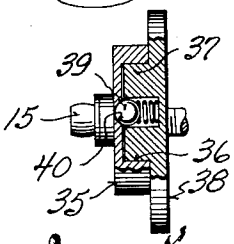

Fig. 10.

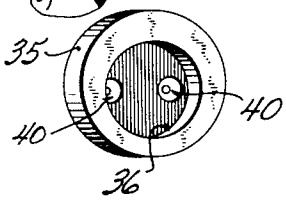

Fig. 11.

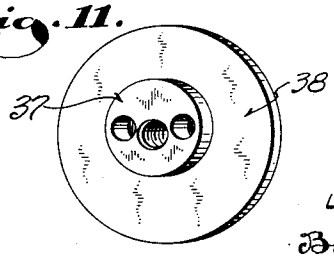

Inventor
John Oster
By Dwight Little Jones
Attorney

Patented Nov. 28, 1939 2,181,282

UNITED STATES PATENT OFFICE

2,181,282

VIBRATOR

John Oster, Racine, Wis., assignor to John Oster Manufacturing Company, Racine, Wis., a corporation of Wisconsin

Application December 9, 1937, Serial No. 178,945

3 Claims. (Cl. 128—36)

This invention relates to vibrators and refers particularly to hand vibrators of the type used by masseurs and barbers. Generally, these machines are strapped on the back of the hand in such a way as to leave the fingers free for massaging manipulation.

While several different schemes have been employed to produce the desired vibration, one of the more practical constructions obtained vibration by suspending an electric motor between stationary bearings carried by the base of the machine. One end of the motor was flexibly supported from one bearing, which also held the motor against turning, and the other end of the motor received support from the other bearing by having the motor shaft projecting from that end of the motor eccentrically connected with the bearing. As a result of this eccentric connection, the motor and consequently the entire machine vibrated when in operation.

The speed of the motor and hence the frequency of the vibrations was controlled by a rheostat in the power supply line; but these past machines had no provision for regulating the amplitude of the vibration, and as a result the penetration or effect of the vibration was practically the same regardless of its speed or frequency.

Deep penetration is often highly undesirable, and consequently, the lack of facilities for adjusting the amplitude of the vibration in machines heretofore in use was a serious disadvantage.

The present invention therefore contemplates as one of its objects to provide means for adjusting the amplitude of the vibrations produced.

More specifically it is an object of this invention to provide means for adjusting the degree of eccentricity in the connection between the motor shaft and the adjacent stationary bearing so as to effect a desirable adjustment in the throw of the machine, and consequently in the amplitude of the vibrations.

It is also an object of this invention to provide means whereby this desirable adjustment may be effected without in anywise complicating the design of the machine or greatly increasing its cost of manufacture.

Another disadvantage of vibrating machines of the character described was the almost universal use of metal springs for the fastening bands which hold the machine to the back of the hand. These spring bands, or grips as they are called, allowed the machine to slip down off of the hand, especially when used in a downwardly direction. Besides permitting the machine to slip off of the hand, these spring grips could not be easily cleaned or sterilized, obviously a vital consideration.

This invention therefore has as another of its objects to provide improved fastening bands or grips for holding the machine to the hand which are so designed as to positively preclude slippage while at the same time leaving the hand entirely free for massaging manipulation.

This invention also contemplates the provision of elastic bands or grips which may be easily cleaned and sterilized.

A further object of this invention is to so attach the bands or grips to the machine that rattling noises which were inherent in past constructions are entirely eliminated.

With the above and other objects in view which will appear as the description proceeds, this invention resides in the novel construction, combination and arrangement of parts substantially as hereinafter described, and more particularly defined by the appended claims, it being understood that such changes in the precise embodiment of the hereindisclosed invention may be made as come within the scope of the claims.

The accompanying drawings illustrate two complete examples of the physical embodiment of the invention constructed in accordance with the best modes so far devised for the practical application of the principles thereof, and in which:

Figure 1 is a side view of a vibrator machine constructed in accordance with this invention, with parts broken away and in section, and illustrating the manner in which it is attached to the hand;

Figure 2 is a top view of part of the machine with a portion thereof broken away and in section;

Figure 3 is a cross sectional view taken through Figure 1 on the plane of the line 3—3;

Figure 4 is a side view with parts broken away and in section and with the electric motor omitted for the sake of clarity, illustrating particularly the eccentric mounting;

Figure 5 is a detail sectional view through the adjustable support for the motor shaft by which the amplitude of vibration is regulated;

Figure 6 is a perspective view of this adjustable connecting means;

Figure 7 is a perspective view similar to Figure 6, but showing the connecting means from the opposite side;

Figure 8 is a perspective view of two parts of the adjusting means;

Figure 9 is a view similar to Figure 1, illustrating a slightly modified form of this invention;

Figure 10 is a perspective view of one of the elements of the adjustable connection employed in the construction shown in Figure 9;

Figure 11 is a perspective view of the other cooperating element of the adjustable connection employed in the modification; and

Figure 12 is a detail sectional view of the assembled adjustable eccentric connection employed in the modification.

Referring now particularly to the accompanying drawings in which like numerals indicate like parts throughout the several views, the numeral 5 designates the base of the machine to the bottom of which a cushion pad 6 is suitably secured. The pad protects the back of the operator's hand to which it is strapped by elastic bands 7 and 8.

Projecting up from the opposite ends of the base are two bearing pedestals 9 and 10, and supported between these bearings in a manner to be hereinafter described, is an electric motor 11.

The motor 11 is preferably a high speed motor and has one end 12 of its armature shaft projecting from that end of the motor adjacent to the bearing pedestal 9. At its opposite end the motor housing has a coil spring 13 fixed thereto, the outer end of which is removably secured in the bearing of the pedestal 10. This end of the motor is thus resiliently or flexibly supported, and inasmuch as the coil spring is rigidly secured to the motor casing and the bearing of the pedestal 10, the motor is held thereby against turning.

A switch 14 carried by the back end of the base controls the connection of the motor with a suitable source of electric current, a rheostat (not shown) being employed to regulate the speed of the motor.

The opposite end of the motor is supported from the bearing of the pedestal 9 by means of an eccentric connection between the bearing and the projecting end 12 of the armature shaft so that when the motor is running, the eccentricity of this connection produces the desired vibration.

The eccentric connection between the motor shaft 12 and the bearing of the pedestal 9 comprises a stub shaft 15 journalled in a ball bearing 16 mounted in the bearing portion of the pedestal 9. This stub shaft is carried by a substantially rectangular block 17 having a longitudinal bore 18 closed at one end and tapped at its open end. The bore 18 constitutes a slideway for a cylindrical plug or slide 19 which is threaded to the projecting end 12 of the armature shaft, the shaft entering the bore 18 through an elongated slot 20 in the side of the block.

A compression spring 21 confined between the bottom of the bore 18 and the plug 19 yieldingly urges the plug outwardly of the bore to a position limited by the engagement of the armature shaft 12 with the outer end of the elongated slot 20. In this position the stub shaft and the armature shaft are substantially axially aligned.

Threaded in the tapped outer end of the bore 18 is an adjusting screw 22 provided with a knurled head 23 to permit the same to be turned in and out. The inner end of this screw bears against the cylindrical plug to move the same against the action of the compression spring 21 into axial misalignment with the armature shaft. The extent of eccentricity or axial offset capable of being effected in this manner is limited by the engagement of the armature shaft with the inner end of the elongated slot 20.

To prevent detachment of the adjusting screw, its inner end has an annularly grooved projection 24 fitting in a short bore 25 in the outer end of the plug 19. A cross pin 26 secured in the plug and engaging in the annular groove of the extension 24 freely rotatably but non-longitudinally movably holds the screw assembled with the plug.

From the description thus far it will be seen that when the motor is running the eccentric relationship between the stub shaft 15 and the armature shaft causes the motor to vibrate at a speed dependent upon the speed of the motor and with an amplitude depending upon the adjustment of the degree of eccentricity; and inasmuch as the connection between the stub shaft and the armature shaft permits adjustment of this eccentricity from zero to maximum, it is readily apparent that the machine may be adjusted to have any desired degree of penetration.

A guard housing 27 is positioned over the bearing of the pedestal 9 and the adjustable connection between the pedestal bearing and the motor to preclude the possibility of contact with the revolving noncircular parts. This guard housing is substantially cup-shapped and is mounted by means of two downwardly directed parallel ears 28 which embrace the sides of the lower portion of the pedestal and are pivotally secured thereto by a screw 29.

The guard housing is held in its closed position by a spring clip 30 fixed thereto and arranged to engage notches 31 in the bearing pedestal 9. An upwardly projecting lip 27' on the periphery of the guard housing facilitates moving the same to open or closed position.

The straps or bands 7 and 8 by which the machine is held to the back of the hand are designed to preclude the possibility of having the machine slip forwardly on the hand during use, particularly when it is used in a downward direction. The larger band 8 fits around the hand directly forwardly of the thumb and the smaller band 7 fits over the middle two fingers. It is essential that the machine be held in a position with the band 7 in back of the second knuckles of these middle two fingers so that all of the fingers are free for massaging manipulation. The bands 7 and 8 are therefore formed of rubber having a high coefficient of friction so that after being applied, the machine will not of itself slide forwardly on the hand.

The bands are attached to the base by means of metal clips 32 securely fastened to the ends of the straps or bands and attached to the sides of the base by screws 33 which hold the metal clips firmly against the sides of the base to prevent rattling during operation of the machine.

While the manner of adjusting the eccentricity between the stub shaft and the armature shaft to vary the amplitude of the vibration as hereinbefore described is preferable because the adjustment may be effected with one hand, other means for adjusting the eccentricity may be employed, and in Figures 9 to 12, inclusive, one modified form of this feature of the invention is illustrated.

In this construction, the stub shaft has a circular disk 35 fixed thereto. This disk has an eccentrically disposed bore 36 to receive a cylindrical projection 37 eccentrically mounted on a disk 38 which is larger in diameter than the disk 35. This disk 38 with its cylindrical projection 37 is secured to the projecting end of the armature shaft.

Hence, it will be seen that upon relative rotation of the disks 35 and 38, the degree of eccentricity between the axes of the stub shaft and armature shaft may be adjusted to either maximum or minimum as defined by detents consisting of spring pressed balls 39 carried by the disk 38 and engageable in recesses 40 formed in the bottom of the bore 36. While only two positions of adjustment are provided in this instance, it is obvious that by increasing the number of detent positions, finer adjustment of the amplitude of vibration may be obtained.

From the foregoing description taken in connection with the accompanying drawings, it will be readily apparent to those skilled in the art that this invention provides simple means for adjusting the amplitude of the vibration produced by a hand vibrator, and that it also provides a simple expedient for preventing the vibrator from slipping away from its proper position on the back of the hand.

What I claim as my invention is:

1. In a hand vibrator of the type adapted to be strapped to the hand of an operator: a base; an electric motor; flexible means supporting one end of the motor from the base and holding the motor against turning, said motor having a shaft, one end of which projects at the opposite end of the rotor; a fixed bearing carried by the base adjacent to said projecting end of the motor shaft; a stub shaft journalled in said bearing; a block transversely fixed to the stub shaft, said block having a longitudinal slideway therein closed at one end; a slide fixed to the motor shaft and slidable in said slideway; a spring between the closed end of the slideway and the slide for yieldingly urging the slide in one direction to effect relative radial motion between the stub shaft and the motor shaft; an adjusting screw closing the other end of the slideway and acting in opposition to the spring; a guard covering said block and the parts carried thereby; and means mounting the guard for swinging movement with respect to the base to enable the same to be swung to a position uncovering the block for adjustment of its screw.

2. In a hand vibrator of the character described: a base; an electric motor having a shaft, one end of which projects at one end of the motor; flexible means for supporting the opposite end of the motor from the base and for holding the motor against turning; a fixed bearing carried by the base adjacent to the projecting end of the motor shaft; an adjustable eccentric connection between the projecting end of the motor shaft and said bearing including a rotatable member having portions thereof projecting unequal distances from the axis of rotation; a stub shaft journalled in said bearing and fixed transversely to said rotatable member, said rotatable member having a longitudinal slideway therein closed at one end; a slide fixed to the motor shaft and slidable in said slideway; a spring yieldingly urging the slide in one direction to effect relative radial motion between the motor shaft and the stub shaft; and adjusting screw closing the other end of the slideway and acting in opposition to the spring; a susbtantially cylindrical guard housing covering said rotatable member and the parts carried thereby; means pivotally mounting said guard housing from the base; and means for releasably holding the guard housing in its guarding position substantially axially aligned with the motor while allowing the same to be swung to an open position exposing the adjusting screw of the eccentric connection.

3. In a vibrator of the character described having a base and an electric motor, one end of which is flexibly mounted from the base, and the other end of which has a motor shaft projecting therefrom: an adjustable eccentric mounting to support the last named end of the motor from the base comprising—a bearing fixed to the base; a stub shaft journalled in the bearing; a member fixed to the stub shaft and having a slideway transverse to the axis of the stub shaft, said slideway being closed at one end and open at its other end; a slide movable in said slideway and secured to the projecting end of the motor shaft; an adjustable screw threaded in the open end of the slideway and engaging the slide to move the same and effect relative axial adjustment between the stub and the motor shaft; and a spring confined between the closed end of the slideway and the slide tending at all times to push the slide out of the slideway and thereby guard against accidental turning of the adjusting screw.

JOHN OSTER.

CERTIFICATE OF CORRECTION.

Patent No. 2,181,282. November 28, 1939.

JOHN OSTER.

It is hereby certified that error appears in the printed specification of the above numbered patent requiring correction as follows: Page 3, first column, line 29, claim 1, for the word "rotor" read motor; and that the said Letters Patent should be read with this correction therein that the same may conform to the record of the case in the Patent Office.

Signed and sealed this 2nd day of January, A. D. 1940.

Henry Van Arsdale,
Acting Commissioner of Patents.

(Seal)

CERTIFICATE OF CORRECTION.

Patent No. 2,181,282. November 28, 1939.

JOHN OSTER.

It is hereby certified that error appears in the printed specification of the above numbered patent requiring correction as follows: Page 3, first column, line 29, claim 1, for the word "rotor" read motor; and that the said Letters Patent should be read with this correction therein that the same may conform to the record of the case in the Patent Office.

Signed and sealed this 2nd day of January, A. D. 1940.

Henry Van Arsdale,
Acting Commissioner of Patents.

(Seal)