Nov. 29, 1938. A. U. AYRES 2,138,468

CENTRIFUGAL SEPARATOR

Filed March 17, 1936 2 Sheets-Sheet 1

FIG.1

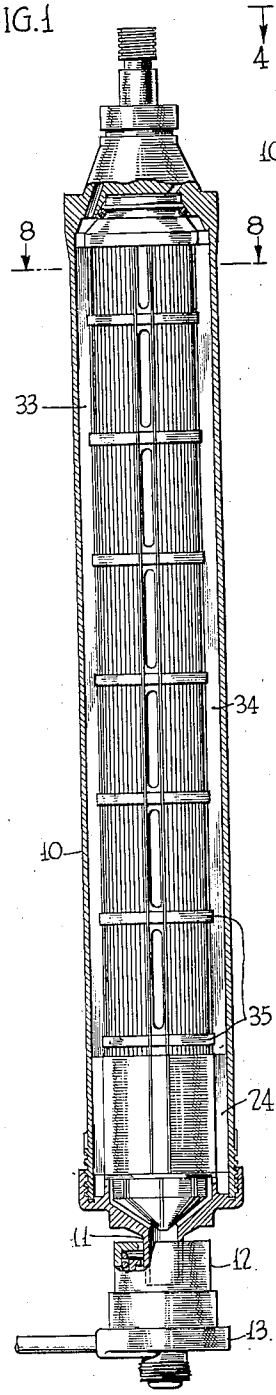

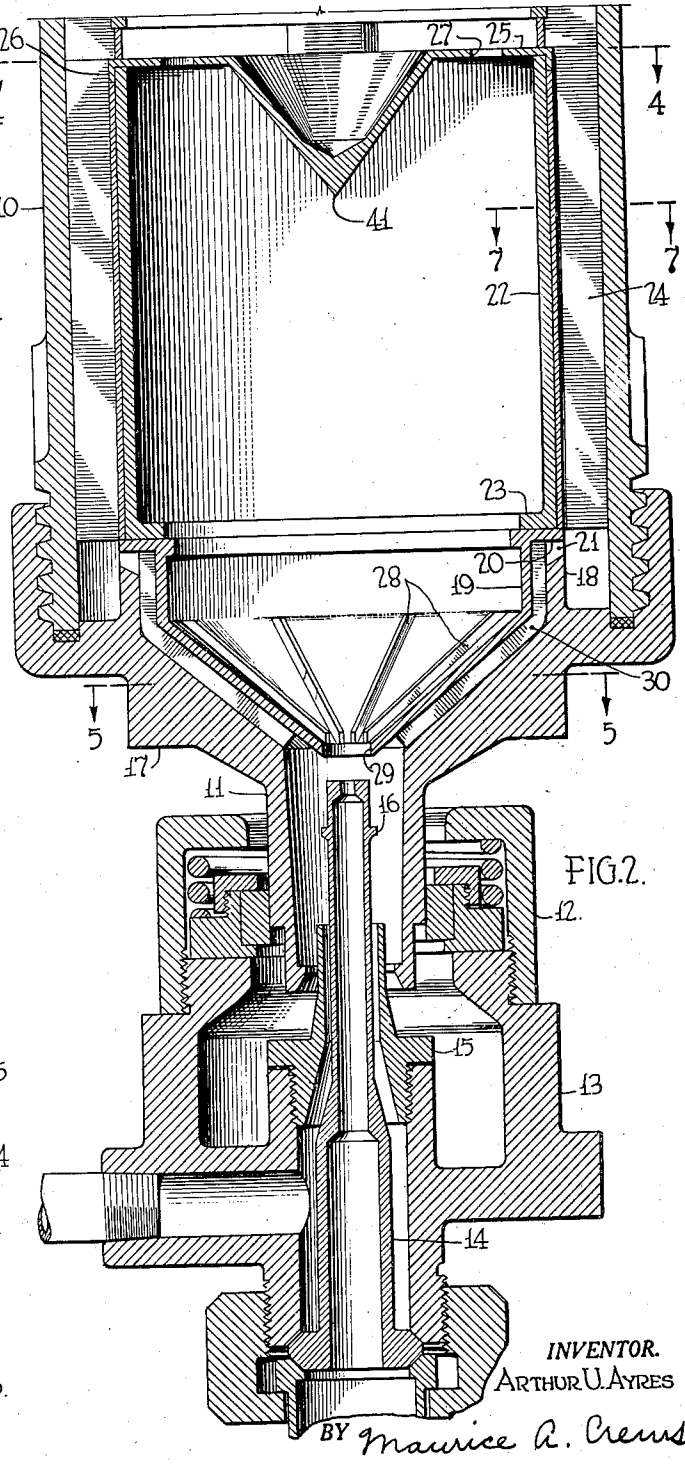

FIG.2.

INVENTOR.
ARTHUR U. AYRES
BY Maurice A. Crews
ATTORNEY.

CENTRIFUGAL SEPARATOR

Filed March 17, 1936 2 Sheets-Sheet 2

FIG.3

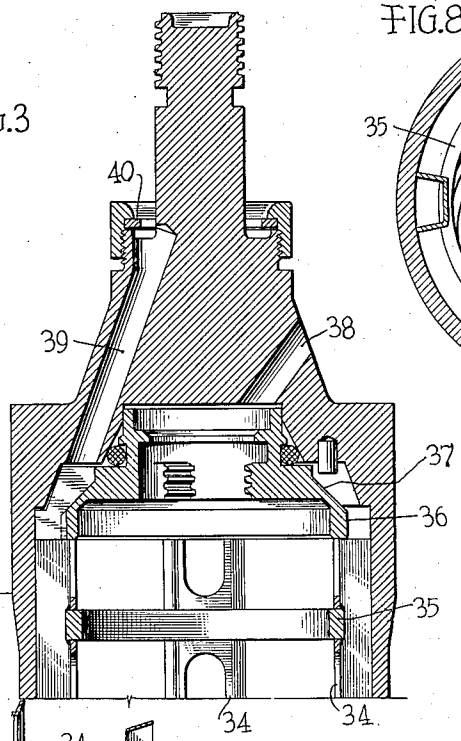

FIG.8

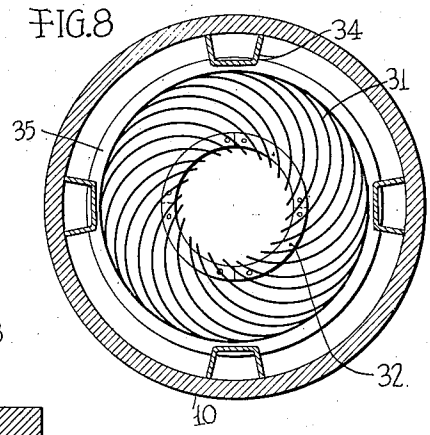

FIG.7

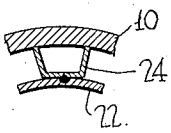

FIG.6

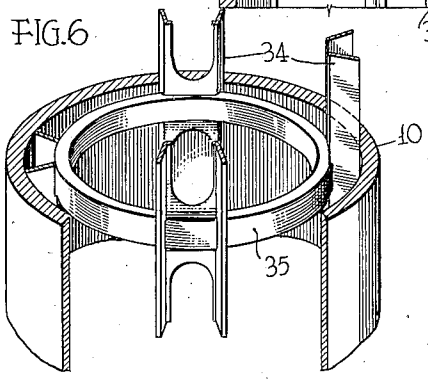

FIG.4.

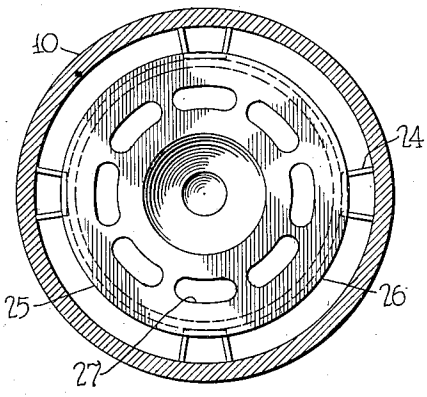

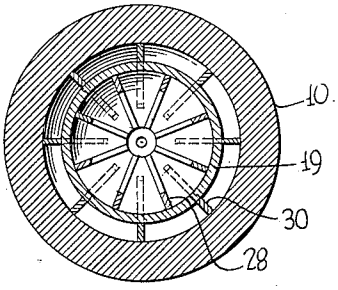

FIG.5

INVENTOR.
ARTHUR U. AYRES
BY Maurice A. Crews
ATTORNEY.

Patented Nov. 29, 1938

2,138,468

UNITED STATES PATENT OFFICE

2,138,468

CENTRIFUGAL SEPARATOR

Arthur U. Ayres, Chestnut Hill, Pa., assignor to The Sharples Specialty Company, Philadelphia, Pa., a corporation of Delaware

Application March 17, 1936, Serial No. 69,291

6 Claims. (Cl. 233—27)

The present invention pertains to the type of centrifugal separator adapted to discharge continuously two liquid effluents. Examples of separating operations which may be accomplished by the use of the centrifugal separator of the invention are the concentration of emulsions such as cream and latex, the separation of immiscible liquids from each other, or the simultaneous separation of solid impurities from a mixture of liquids or an emulsion while effecting separating or concentrating operations upon such liquids or emulsion.

One object of the invention has been to provide a centrifugal separator capable of concentrating emulsions without substantial coagulation of the dispersed phase of such emulsions. In the concentration of latex, for example, it is important that the concentrating operation be carried on in such a manner as to avoid the coagulation of latex particles and an object of the invention has been to provide a centrifugal separator which avoids agitation of the latex in such a manner as to effect undesired coagulation.

A second object of the invention has been to provide improved flushing means by which the interior of a centrifugal rotor may be conveniently flushed out at desired intervals in such a manner as to effect a thorough cleaning thereof and displacement and recovery of concentrated material.

A still further object of the invention has been to provide a centrifugal separator of improved design adapted to effect simultaneous concentration of an emulsion or separation of immiscible liquids and removal of solid impurities from the desired effluents.

Other objects and the manner in which they have been attained will be evident upon a reading of the sub-joined specification in the light of the attached drawings, in which:

Figure 1 is a central longitudinal section of the centrifugal rotor of the invention illustrating certain of the parts in side elevation,

Fig. 2 is an enlarged central longitudinal section through the lower part of the rotor illustrated in Fig. 1,

Fig. 3 is an enlarged central longitudinal section through the top portion of the rotor of Fig. 1, the accelerator member being omitted from this figure for the purpose of clarity of illustration,

Fig. 4 is a central transverse section taken on the line 4—4 of Fig. 2,

Fig. 5 is a transverse section taken on the line 5—5 of Fig. 2,

Fig. 6 is a detailed perspective view illustrating the construction of a spacer member located in the upper end of the centrifugal rotor of the invention. The accelerator member which is located within this spacer member during the operation of the machine is omitted from this view,

Fig. 7 is a detailed cross-section taken on the line 7—7 of Fig. 2, and

Fig. 8 is a central transverse section taken on the line 8—8 of Fig. 1.

In the particular form of the invention illustrated in the drawings, the centrifugal rotor 10 is provided with an inlet feed boss 11 which is surrounded by a conventional drag mechanism 12. The drag mechanism is secured in position on a base 13 which also carries a feed nozzle 14 through which the material to be treated is passed to the centrifugal rotor. An auxiliary feed nozzle 15 is also secured to the base 13 and surrounds the feed nozzle 14. The feed nozzle 14 is provided, at a point above the upper end of the nozzle 15, with a bead 16 which is adapted to be impinged by liquid fed through the nozzle 15 and to deflect that liquid against the inner circumference of the boss 11.

The lower end 17 of the rotor is provided with an annular flange 18 extending longitudinally interiorly of the rotor. The upper end of the flange 18 forms a seat for a flange 20 of a feed liquid directing member 19 having a conical base portion. The flange 18 is cut away at spaced points, as illustrated at 21, in order to afford egress from the space between the member 19 and the bottom portion of the bowl for liquid passing upwardly through that space.

A cylinder 22 is provided with a lower flange 23 adapted to be seated upon the flange 20. This cylinder is held in position centrally within the rotor by means of a plurality of U-shaped spacer members 24 which occupy the space between the cylinder and the walls of the rotor. A transverse partition or cover 25 is secured in place at the upper end of the cylinder and provided with a depending flange 26 which surrounds the cylinder at its upper end. A plurality of spaced openings 27 are formed in this cover and a conical spreader member 41 is formed at the center of the cover. It is to be noted that the cylinder 22 is relatively short and that the main body of the centrifugal separator lies above that cylinder.

The feed liquid directing member 19 is provided on the upper side of its conical surface with a plurality of radially extending blades or fins 28 and on the lower side of its conical surface with a plurality of radially extending blades

or fins 30. The fins 28 extend radially inwardly toward the zone of the feed opening 29 in the lowermost part of the member 19 and are of relatively narrow width. The spaced fins 30 extend radially from the outer surface of the member 19 to the inner surface of the lower end 17 of the rotor and thus serve rapidly to bring liquid entering this space up to the rotational speed of the rotor. The main body of the centrifugal separator is provided with an auxiliary structure consisting of a plurality of radially outwardly extending curved stratifying plates 31 which are secured together by means of centrally disposed rings 32. The auxiliary structure consisting of these curved plates and rings is held in a position spaced from the walls of the rotor by means of a novel spacer member 33 consisting of U-shaped longitudinal members 34 secured to circular transverse members 35. The U-shaped members 34 occupy the space between the circular members 35 and the wall of the rotor and serve to hold the entire spacer structure centered within the rotor. The innermost portions or bases of the U-shaped members are provided with longitudinally extending openings as illustrated in Figures 1, 3 and 6 of the drawings to afford provision for deposition of solids through said openings. The accelerator structure is held in position within the rotor by means of this spacer member. The spacer member is held longitudinally in position in the rotor by means of the depending flange 36 of the inside dam disc 37 of the rotor, the lower ends of the members 34 being supported upon the cover 25. The lighter effluent is discharge from the rotor through outlets 38 and the heavier effluent through outlets 39 controlled by a conventional ring dam 40.

In the use of the centrifugal separator in the concentration of a latex emulsion, for example, the latex emulsion is fed through the nozzle 14 into contact with the conical spreader member 41 and flows down the walls of the cylinder 22. Latex which reaches the lower end of the preliminary feed section of the rotor formed by the cylinder 22 and directing member 19 comes into contact with the blades or fins 28 formed upon the inner portion of the base of the member 19 and is thus accelerated to the rotational speed of the rotor. This feature of construction prevents flow of the liquid inwardly through the feed opening 29, since liquid having the rotational velocity of the rotor is naturally held outwardly under the influence of centrifugal force and cannot therefore escape through the opening 29. As the operation of the machine is continued, the wall of liquid within the cylinder 22 will form inwardly to the point at which it overflows through the openings 27 at its upper end. When this stage of operation is reached, a rotating liquid wall of substantial depth will have been formed within the feed cylinder 22. Liquid deflected by the spreader member 41 will be impelled into contact with this wall and gradually accelerated up to the speed of the wall by such contact. Only a small part of the liquid within the preliminary feed section of the rotor is positively accelerated to the speed of the rotor by the fins 28, the remainder of the liquid being accelerated by the liquid wall against which it impinges after delivery to the rotor and deflection by the spreader member 41.

These features of operation have important advantages in connection with the treatment of a material, such for example, as latex. Thus, the feed section of the rotor affords a primary clarifying zone in which coarser impurities may be displaced outwardly to the wall of the rotor and separated from the latex before feed to the main body of the rotor. A sufficient degree of turbulence exists in this preliminary feed section to prevent concentration of latex in this section but this turbulence is insufficient to cause coagulation. The partially clarified latex fed to the rotor is thus passed upwardly through the openings 27 into the zone of the rotor occupied by the accelerator stratifying plates. The concentration of the latex occurs in this zone. It is to be noted that latex fed to this accelerator zone has already attained substantial rotational velocity incident to its passage through the feed section. Latex passing through the openings 27 does not therefore undergo a sudden acceleration upon reaching the longitudinal zone of the rotor occupied by the stratifying plates. This factor is of importance in avoiding coagulation of latex particles.

Latex passing through the main body of the rotor above the openings 27 is subjected to a simultaneous concentrating and clarifying operation. The provision of the spacer member 33 which avoids contact of the stratifying plates 31 with the wall of the rotor is important in connection with the clarifying aspect of this operation, for the fact that the accelerator plates are spaced from the wall of the rotor affords a substantial free space between the accelerator plates and the wall of the rotor for the deposition of solids. By reason of the provision of this large free space, the rotor may be run for a substantial length of time without necessity for interruption of operation for the purpose of removing deposited solids.

The concentrated latex is contiuuously discharged through the lighter effluent discharge outlets 38 while the dilute phase is discharged through the outlets 39 and over the ring dam 40.

When it is desired to clean the accelerator structure to remove deposited solids, the feed of material to the rotor is discontinued and a washing liquid, e. g., water, is passed through the annular space afforded between the feed nozzle 15 and the nozzle 14. This washing liquid impinges against the bead 16 formed upon the nozzle 14 and is deflected into contact with the inner wall of the boss 11 of the rotor. The centrifugal force generated by the rotation of the rotor causes the washing liquid to cling to this surface and be projected upwardly into the space occupied by the radially extending blades 30. These blades bring the washing liquid up to the speed of the rotor and this liquid is impelled outwardly through the openings 21 between the flange 20 and the flange 18 under the influence of centrifugal force. Washing liquid impelled through the openings 21 flows upwardly through the space between the cylinder 22 and the wall of the rotor under the influence of centrifugal force and does not come into contact with the separating zone of the rotor until it passes the longitudinal zone of the rotor occupied by the cylinder 22. The feed of washing liquid is maintained at a rapid rate and this washing liquid passes inwardly through the spaces between the stratifying plates and is discharged from the rotor through the discharge outlet 39, displacing concentrated material toward the center and through outlets 38.

It will be seen that the centrifugal separator of the invention affords provision for a rapid

feed of flushing liquid through the rotor and that the flushing operation may be performed even in cases in which the feed section of the rotor is entirely clogged by material under treatment.

Modifications will be obvious to those skilled in the art and I do not therefore wish to be limited except by the scope of the sub-joined claims.

I claim:

1. In a centrifugal separator, the combination comprising a centrifugal rotor divided by a transverse partition into a preliminary feed section comprising an inner chamber and a subsidence section into which material is adapted to flow from said feed section, said partition being provided with openings through which material may pass from said chamber to said subsidence section, an annular longitudinal wall secured to said transverse partition and extending toward the zone of feed of material to the rotor, said wall being annularly spaced from the inner circumference of the main body of the centrifugal rotor and forming with said partition said inner chamber adapted to receive liquid before said liquid is passed into the main body of the centrifugal rotor, means for feeding a liquid material to be subjected to a centrifugal separating operation into said chamber, and means for feeding an auxiliary liquid into the space between said annular wall and the wall of the rotor, whereby to feed said auxiliary liquid around said chamber and into the main body of the rotor without passing said auxiliary liquid through said feed section.

2. In a centrifugal separator, the combination comprising a centrifugal rotor divided by a transverse partition into a preliminary feed section comprising an inner chamber and a subsidence section into which material is adapted to flow from said feed section, said partition being provided with openings through which material may pass from said chamber to said subsidence section, an annular longitudinal wall secured to said transverse partition and extending toward the zone of feed of material to the rotor, said wall being annularly spaced from the inner circumference of the main body of the centrifugal rotor and forming with said partition said inner chamber adapted to receive liquid before said liquid is passed into the main body of the centrifugal rotor, means for feeding a liquid material to be subjected to a centrifugal separating operation into said chamber, and means for feeding an auxiliary liquid into the space between said annular wall and the wall of the rotor and radially extending accelerator members occupying the space between the main body of the rotor and said chamber, whereby to accelerate auxiliary liquid fed into said space to the speed of the rotor.

3. In a centrifugal separator, the combination comprising a centrifugal rotor having separate discharge outlets for separated liquid effluents, means for feeding a liquid material to be subjected to a centrifugal separating operation to said rotor, a preliminary feed section within said rotor into which said material is adapted to be injected by said feeding means, means for maintaining a peripheral wall of material in said preliminary feed section during rotation of said rotor, said preliminary feed section being adapted gradually to accelerate the material fed thereto without substantial stratification thereof, means longitudinally beyond said preliminary feed section and spaced from said rotor for facilitating stratification of material fed to the rotor, and a circumferential wall around said feed section extending longitudinally of the rotor and spaced from the wall of the rotor for introducing said flushing liquid directly into the outer radial zone of the rotor at a point surrounding said stratifying means.

4. In a centrifugal separator, the combination comprising a centrifugal rotor having separate discharge outlets for separated liquid effluents, means for feeding a liquid material to be subjected to a centrifugal separating operation to said rotor, a preliminary feed section within said rotor into which said material is adapted to be injected by said feed means, means at the upper end of said preliminary feed section for maintaining a peripheral wall of material in said preliminary feed section during rotation of said rotor, said preliminary feed section being adapted gradually to accelerate the material fed thereto without substantial stratification thereof, a stratifying insert longitudinally beyond said preliminary feed section, and means for guiding a flushing liquid around said feed section without contact with the material in said feed section for introducing said flushing liquid directly into the outer radial zone of the rotor at a point surrounding said stratifying insert.

5. In a centrifugal separator, the combination comprising a centrifugal rotor, means for feeding a liquid material to be subjected to a centrifugal separating operation to said rotor, a preliminary feed section within said rotor into which said material is adapted to be injected by said feed means, means at the upper end of said preliminary feed section for maintaining a peripheral wall of material in said preliminary feed section during rotation of said rotor, said preliminary feed section being adapted gradually to accelerate the material fed thereto without substantial stratification thereof, a stratifying insert longitudinally beyond said preliminary feed section, and means for guiding a flushing liquid around said feed section without contact with the material in said feed section for introducing said flushing liquid directly into the outer radial zone of the rotor at a point surrounding said stratifying insert.

6. In a centrifugal separator, the combination comprising a centrifugal rotor having therein a preliminary feed section having a plain peripheral wall throughout the major portion of its length and a subsidence section into which material is adapted to flow from said feed section, means at the upper end of said preliminary feed section for maintaining therein a wall of material during rotation of said rotor, a passage in the base of said preliminary feed section, means for injecting a liquid material to be subjected to a centrifugal separating operation through said passage and into said feed section and spreading it against the wall of material retained therein, and a plurality of narrow accelerator fins extending radially about said passage in the bottom of said feed section, said fins extending only a very small distance longitudinally of said feed section, whereby the rotational speed of material coming in contact with said fins is accelerated.

ARTHUR U. AYRES.