Nov. 22, 1938. W. J. HILLIARD 2,137,649

COMPRESSOR AND SIMILAR DEVICE

Filed Oct. 23, 1936 2 Sheets-Sheet 1

Fig. 1.

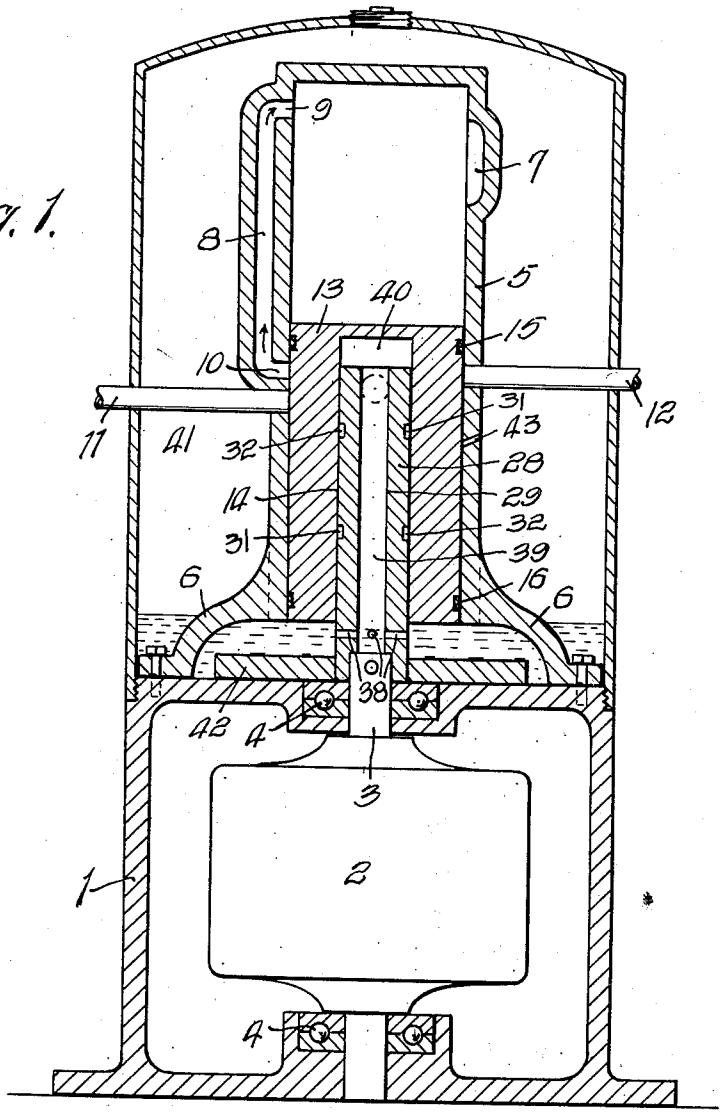

INVENTOR:
W. J. Hilliard.
BY
Frank Sharson
ATTORNEY.

Nov. 22, 1938. W. J. HILLIARD 2,137,649

COMPRESSOR AND SIMILAR DEVICE

Filed Oct. 23, 1936 2 Sheets-Sheet 2

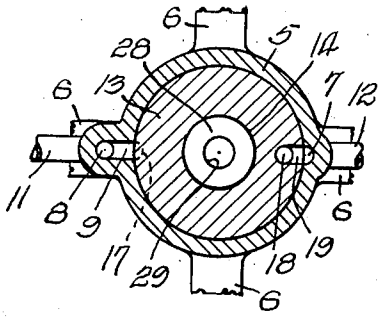

Fig. 2.

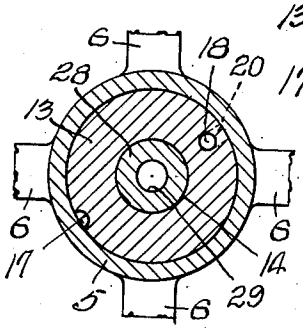

Fig. 3.

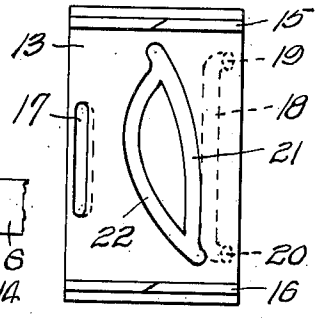

Fig. 4.

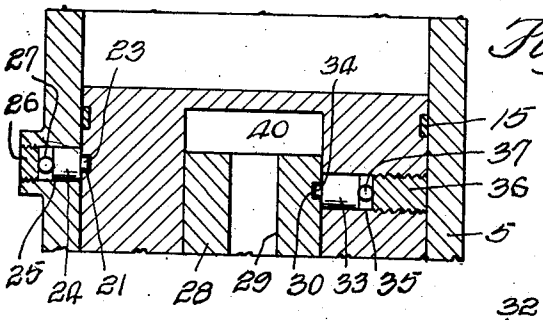

Fig. 5.

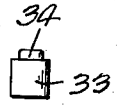

Fig. 6.

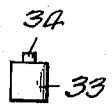

Fig. 7.

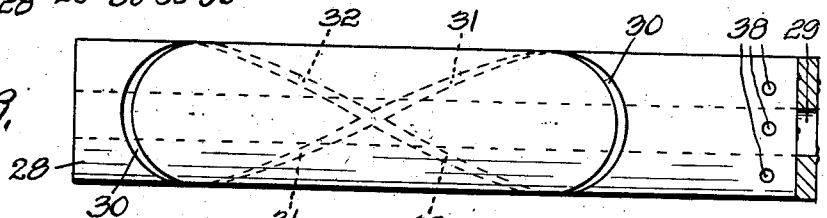

Fig. 8.

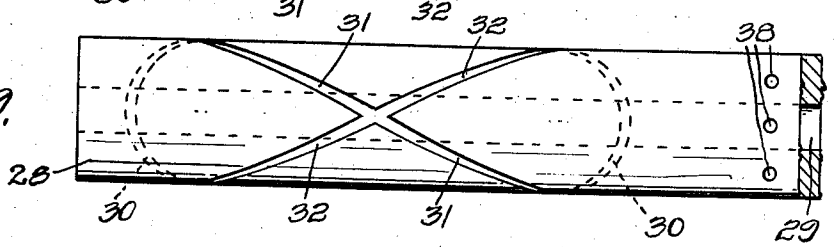

Fig. 9.

INVENTOR:
W. J. Hilliard.
BY
Fred K. Mason
ATTORNEY.

Patented Nov. 22, 1938 2,137,649

UNITED STATES PATENT OFFICE

2,137,649

COMPRESSOR AND SIMILAR DEVICE

William J. Hilliard, St. Clair, Mo.

Application October 23, 1936, Serial No. 107,201

5 Claims. (Cl. 230—173)

This invention relates to power driven devices, such for instance as compressors, although not necessarily limited thereto, as the essence of the invention is applicable to power producing devices such as engines and the like, and mechanisms transmitting power from one part to another.

An essential object of the invention is the provision of means for converting rotary motion into reciprocating motion, and, reciprocating motion into rotary motion.

A further object of the invention is the provision of means for oscillating the machine element which reciprocates during its reciprocating movement.

A further object of the invention is the provision of means for imparting oscillating motion to a reciprocating member.

A further object of the invention is the provision of means for effectively lubricating the moving parts.

A still further object of the invention resides in the provision of a mechanism which will be simple in construction, and which can be used either for the purpose of producing power, or employing power as a prime mover therefor.

With the above and other objects in view, the invention consists in the novel features of construction, arrangement and combination of parts hereinafter more fully described and finally pointed out in the claims hereto appended.

Referring to the accompanying drawings forming a part of this specification, wherein like characters of reference denote similar parts throughout the several views:

Fig. 1 is a vertical sectional view of a compressor embodying the features of my invention.

Fig. 2 is a horizontal sectional view of the device taken through the cylinder and the reciprocating member with the reciprocating member in its outer position.

Fig. 3 is a horizontal sectional view of the device taken through the cylinder and midway of the reciprocating member in its inner position.

Fig. 4 is a side elevation of the reciprocating member showing the race formed on the outer face thereof.

Fig. 5 is a vertical sectional view showing the driving member and the torque member in operative positions.

Fig. 6 is a side elevation of the oscillating drive member which is also a duplicate of the oscillating torque member.

Fig. 7 is a side elevation of the oscillating drive member from another side thereof.

Fig. 8 is a plan view looking at one side of the rotary member.

Fig. 9 is a plan view looking at the opposite side of the rotary member.

In carrying out the invention, in one embodiment thereof only, which embodiment is illustrated as a compressor, I employ a suitable base member 1 which can be in the form of a casing and adapted to house an electric motor designated generally as 2, the armature shaft 3 of which is supported in suitable bearings designated 4.

A suitable cylinder 5 is supported above the casing 1 by means of suitable supporting legs 6 which are suitably secured to the casing 1. The cylinder is preferably closed at its outer end and open at its inner end, and is illustrated as of the vertical type, although it is apparent that it can be of the horizontal type. The cylinder 5 is provided in the wall thereof with a short longitudinal groove 7 serving as an outlet, which is fully open to the interior of the cylinder, and also provided with a relatively long passage 8 which is open at its ends to the interior of the cylinder and has outer and inner end ports 9 and 10, respectively. An intake pipe 11 is secured to the cylinder adjacent the inner end port 10 and an exhaust or delivery pipe 12 is connected to the cylinder opposite the inner end port 10.

A suitable reciprocable member 13, such as a piston, in one embodiment thereof, is mounted within the cylinder 5, and it is provided with a central bore 14 open to the inner end thereof. The reciprocating member 13 is provided at opposite ends with suitable piston rings, designated 15 and 16. The reciprocating member 13 can, as is manifest, be actuated to serve either as a driven member or a driving member, dependent upon what class of a device it is used in connection with.

In the embodiment shown, the reciprocating member 13 is provided on its peripheral face with a short internal facial groove 17 disposed longitudinally thereof. The opposite side of the reciprocating member 13 is provided with a relatively long passage 18 terminating at its outer end in an intake port 19 and at its inner end in an outlet port 20. A suitable endless race formed of two curved grooved stretches 21 and 22, is formed on the peripheral face of the reciprocating member 13 with one end of each stretch meeting with the other stretch, out of interference with the recess 17 and the passage 18 and its ends 19 and 20, and is so designed as to receive the elongated end 23 of a cylindrical body 24 serving as torque member and mounted to oscil-

late in a transverse bore **25** in the wall of the cylinder. The body **24** is backed by means of a closure plug **26** with a ball **27** therebetween. Reciprocating and oscillating movement of the member **13** serves to oscillate the torque member. This arrangement serves to impart oscillating movement to the piston during reciprocating movement thereof.

The means for imparting reciprocating movement to the member **13** embodies a suitable rotatable member **28**, which in one embodiment thereof, is shown as tubular or sleeve like in form, having a longitudinal passage **29**, and, which is suitably secured at its inner end to one end of the armature shaft **3** of the motor **2**, so as to rotate therewith. The rotary member **28** can, as is manifest, be actuated to serve either as a driving member or a driven member, dependent upon what class of device it is used in connection with. The rotary member **28** projects into the bore **14** of the reciprocating member **13**, and is provided upon its peripheral face with an elongated endless groove fashioned to serve as a race. The end turns **30** of the race are arcuate in shape and they are disposed in suitably spaced relation on one side only of the rotary member **28**. The stretches **31** and **32** connecting the end turns **30** of the race are spirally fashioned and they cross or intersect each other intermediate the end turns **30** on the opposite side of the rotary member **28** from that on which the end turns **30** of the race are formed. Thus, viewing the race from a plan standpoint, if flattened out, it will appear as a figure eight running longitudinally of the rotary member **28** so that the member **28** can rotate in either direction, as desired. The race stretches connecting the end turns **30**, it will be apparent, serves as gradual right and left hand grooved stretches.

The race formed on the rotary member **28** is in the nature of a recessed or grooved race track with the exception that both end turns **30** are preferably of equal size and shape and formed on one side of the rotary member **28** and the spiral stretches **31** and **32** cross or intersect midway the end turns **30** on the opposite side of the rotary member **28**.

A drive member including a cylindrical body **33** and a narrow elongated tongue **34** formed on one end thereof, serves as a drive connection between the reciprocating and rotary members **13** and **28**, respectively. The body portion **33** of the drive connection is mounted in a suitably dimensioned transverse bore **35** in the wall of the reciprocating member **13** and is backed by a suitable closure member **36**, and a ball **37** therebetween, so as to be free to oscillate in the bore **35**. The tongue end **34** of the body **33** engages and rides in the race on the rotary member **28** and during rotation of the member **28** it travels in the race and due to the curvature of the race walls, oscillating movement is imparted to the body **33** of the drive member and its projecting tongue **34**.

It will be apparent that one complete revolution of the rotary member **28** will impart one complete outward stroke to the reciprocating member **13**, and that a second revolution of the member **28** in the same direction will impart an inward or return stroke to the reciprocating member **13**.

In order to efficiently lubricate the cylinder wall, the reciprocating member and the rotary member, I provide the inner end of the rotary member, when tubular or sleeve like in structure, with a series of suitable openings **38** at a point below the inner end of the cylinder **5**, thus, when lubricant is contained within the hood to an elevation sufficient to enter the openings **38**, the interior of the rotary member **28** serves as a well **39** so that during the outward stroke of the reciprocating member **13** lubricant is sucked through the rotary member **28** and into the chamber **40** formed between the outer end of the rotary member and the head of the reciprocating member **13**, which lubricant upon the inward stroke of the reciprocating member **13**, is then forced under pressure out of the openings **38** into the hood chamber **41** surrounding the cylinder **5**, and, in addition thereto rotation of the rotary member **28** imparts rotary motion to a suitable disc **42** secured to the rotary member **28** which rides in engagement with the case **1** for circulating lubricant by centrifugal force within the hood and onto the cylinder and its associated parts. The wall of the cylinder can be provided with a series of suitable openings **43** for additionally feeding the wall of the cylinder with lubricant.

When the rotary and reciprocating members **13** and **28** are used in a compressor construction, as shown, or in a similar construction such as a pump or explosive engine, fluid to be compressed is taken into the compression chamber of the cylinder between the head thereof and the head of the reciprocating member through intake pipe **11**, facial groove **17** on the reciprocating member **13** and the cylinder passage **8** immediately after the starting of the outward stroke of the reciprocating member **13** and compressed during the remainder of the outward stroke. The compressed fluid is discharged or exhausted during the first part of the return or inward stroke of the reciprocating member, the discharge being through the cylinder groove **7**, the passage **18** in the reciprocating member and the outlet pipe **12**.

It will be apparent from the foregoing description read in connection with the drawings, that I provide a simple means for converting rotary motion into reciprocating motion, and vice-versa; that this feature is adapted to other devices than that illustrated; that I provide novel means for imparting oscillating movement to the reciprocating member; that I provide novel means of lubricating the moving parts and that either the rotary or the reciprocating members can be actuated to serve as a prime mover for the other.

The many advantages of the herein described invention will readily suggest themselves to those skilled in the art to which it appertains.

From the foregoing description, it is evident that a simple device for this purpose has been disclosed, but it is to be understood that I do not desire to restrict, or limit myself to the very details of the construction shown and described, which is merely illustrative, it being obvious that changes, not involving the exercise of invention, may be made without conflicting or departing from the spirit of the invention within the scope of the appended claims.

What I claim is:

1. In combination, a cylinder, of a rotary member having an endless way formed with its end turn disposed upon one side of the member and its stretches intersecting each other midway the end turns on the other side of the member, a member reciprocably mounted upon the rotary member, a drive member including a cylindrical body having a transverse tongue connecting said first mentioned members, and said drive connection being mounted to oscillate between the first

mentioned members during their respective movements.

2. A device as defined in claim 1, including oscillating means for imparting oscillating movement to the reciprocating member during reciprocating movement thereof.

3. In combination, a cylinder provided with a valve controlled inlet and a valve controlled outlet intermediate the ends of the cylinder, a member mounted for reciprocation in said cylinder, a member mounted for rotation relative to and in unison with the reciprocating member, a drive member connecting the rotary and reciprocating members and so formed and arranged as to oscillate therebetween, and means between the cylinder and the reciprocating member for imparting oscillating motion to the reciprocating member during movement thereof.

4. A device of the character defined in claim 3, including means so formed and arranged relative to the cylinder, reciprocating member and rotary member to take a charge of lubricant into the reciprocating member through the rotary member during outward movement of the reciprocating member and to set up a lubricant spray during inward movement of the reciprocating member.

5. In a compressor, the combination of a base including a casing, a leg supported cylinder secured to the casing, said cylinder having a closed outer end and open inner end, the inner end being spaced from the casing by means of the legs, an electric motor disposed within the casing, bearings mounted in apertured bosses formed as a part of the casing and through which bearings the motor armature shaft passes, a sleeve like rotary member having peripheral openings adjacent its inner end, said rotary member being secured at its inner end to one end of the armature shaft and in axial alignment with the shaft so that the end of the shaft serves as a closure for the inner end of the sleeve like rotary member, a piston mounted for reciprocation within the cylinder and having telescopic connection with the rotary sleeve like member, an endless race formed with its end turns disposed upon one side of the rotary member and its stretches spirally formed and intersecting each other on the opposite side of the rotary member, a drive member connecting the piston and the rotary member, said drive member being so formed and arranged relative to the piston and rotary members as to engage in the race and oscillate between the piston and rotary members during movements thereof, means for imparting oscillating movement to the piston during reciprocating movement thereof, intake and discharge passages for the cylinder controlled by the oscillation and reciprocation of the piston, a hood encasing the cylinder and secured at its inner end to the casing to form a chamber for the reception of a lubricant, a disc mounted for engagement with the casing and secured to the rotary member for rotation therewith, and said piston during the outstroke thereof sucking lubricant through the sleeve like rotary member into the piston and spraying the lubricant under pressure within the hood during the instroke of the piston.

WILLIAM J. HILLIARD.