Oct. 18, 1938. A. K. SINGERMAN 2,133,638

METHOD AND APPARATUS FOR APPLYING LIQUIDS TO SCALP HAIR

Filed March 30, 1938 2 Sheets-Sheet 1

Fig. 1.

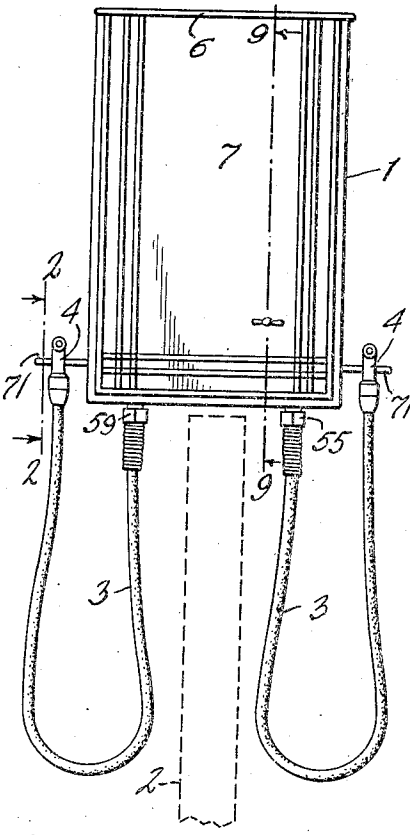

Fig. 2.

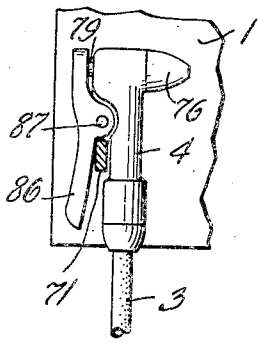

Fig. 8.

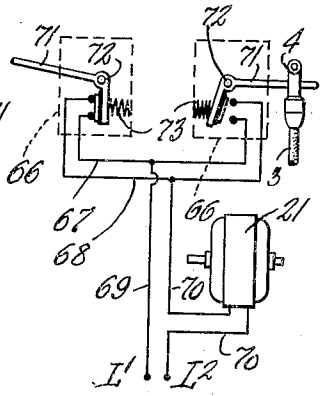

Fig. 3.

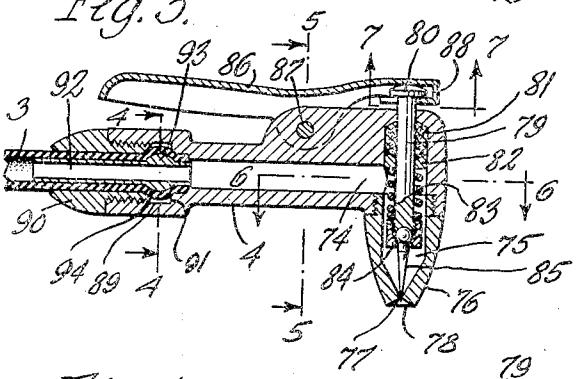

Fig. 6.

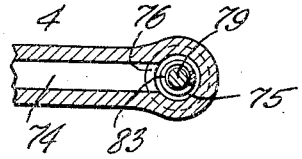

Fig. 7.

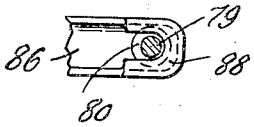

Fig. 4.

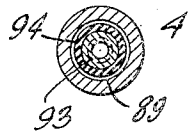

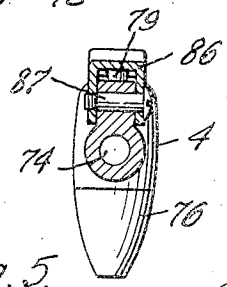

Fig. 5.

INVENTOR
Adolph K. Singerman
BY
Parker, Prochnow & Farmer
ATTORNEYS

Oct. 18, 1938. A. K. SINGERMAN 2,133,638

METHOD AND APPARATUS FOR APPLYING LIQUIDS TO SCALP HAIR

Filed March 30, 1938 2 Sheets-Sheet 2

Fig. 10.

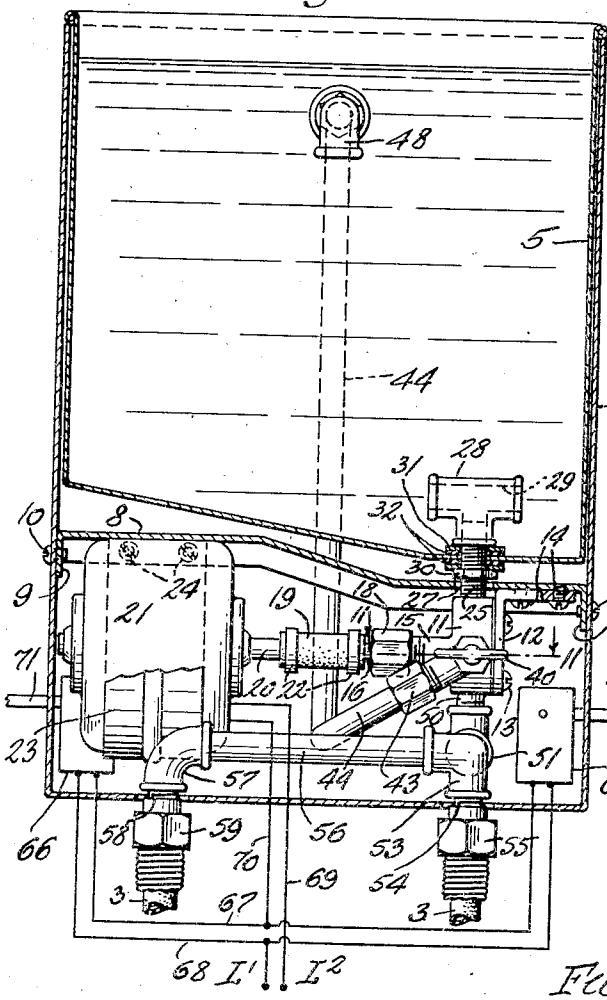

Fig. 9.

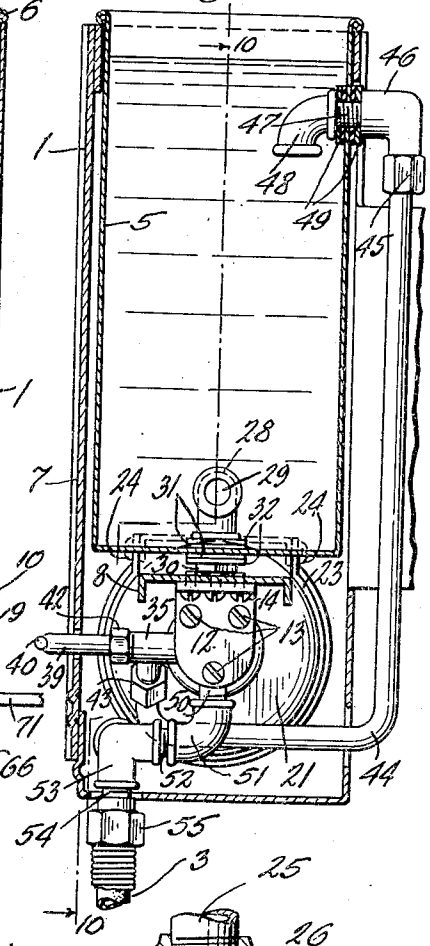

Fig. 11.

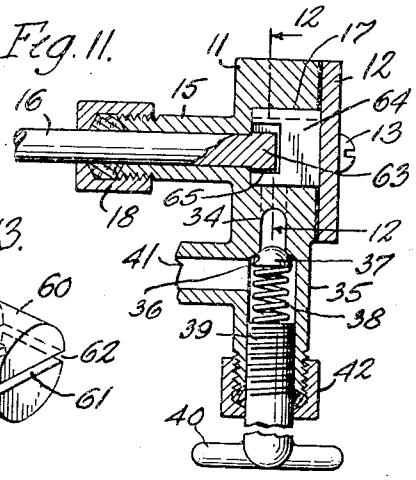

Fig. 12.

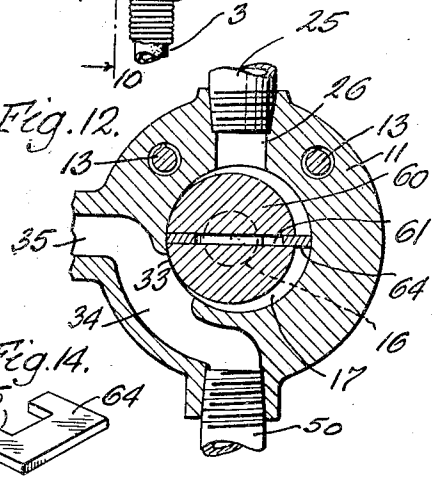

Fig. 13.

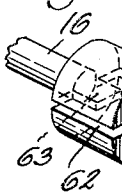

Fig. 14.

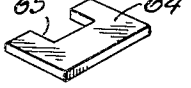

INVENTOR

Adolph K. Singerman

BY

Parker, Prochnow & Farmer,

ATTORNEYS

Patented Oct. 18, 1938 2,133,638

UNITED STATES PATENT OFFICE

2,133,638

METHOD AND APPARATUS FOR APPLYING LIQUIDS TO SCALP HAIR

Adolph K. Singerman, Buffalo, N. Y.

Application March 30, 1938, Serial No. 199,055

19 Claims. (Cl. 132—9)

This invention relates to the application of liquids to scalp hair, and is particularly useful in beauty parlors for the application of hair tonics and wave set lotions, for example, to the scalp and scalp hair. Heretofore it has been customary to apply wave set lotions to the scalp hair, preparatory to setting waves or curls therein, either by pouring or sprinkling the wave set lotion upon different portions of the scalp hair or by spraying such lotion, through a small, hand operated, reciprocating pump or device, upon the outside of the mass of scalp hair, and then working or combing the hair to force the lotion in through the mass of hair to the scalp. At times the scalp hair is parted in different places, lotion poured upon the hair and scalp at the parts, and then an attempt made to work the liquid or lotion along the scalp. I have found that these prior producers are unsatisfactory because there is substantial waste of the lotion used, and it is difficult to uniformly wet the hair and scalp with the lotion or liquid and to work the wave set lotion thoroughly over the hair entirely to the scalp. The previous procedures have also been relatively slow, excess lotion frequently runs down the faces or necks of the patrons with annoyance to the patrons, and the operator gets his or her hands heavily smeared with the lotion. Unless the hair is wet thoroughly just before the lotion is applied, it is very difficult by prior methods to work the lotion through the dry hair to the portions of the hair close to the scalp.

One object of this invention is to provide an improved method of applying liquids, such as tonics and wave set lotions, for example, to the scalp hair, with which thorough and uniform wetting of the scalp hair with a liquid or lotion may be accomplished by the use of a minimum of such lotion or liquid; with which uniform and thorough wetting of the scalp hair with the desired liquid may be obtained whether the scalp hair to which it is applied is wet or dry just before the application; with which the application of the liquid to the scalp hair may be accomplished more rapidly than heretofore and with less tendency and danger of excess liquid running down the face or neck of the patron; with which there will be a minimum smearing of the hands of the attendant or operator; and which will be simple, practical and require a minimum of apparatus and skill to perform.

Another object of the invention is to provide improved apparatus for practicing the improved method and accomplishing each of the objects set forth in the preceding paragraph, and to generally improve and simplify apparatus for applying liquids to scalp hair.

A further object of the invention is to provide an improved apparatus for applying liquids to scalp hair, which will be suitable for installation in present beauty parlors without the use of electricians, plumbers, pipe fitters, or other skilled mechanics; with which one apparatus may supply one or more booths and operators in a beauty parlor; with which the liquid to be applied will be kept well mixed automatically during use; with which the formation of whirling vortexes of the liquid in the reservoir with consequent danger of introduction of air into the stream of liquid being applied to a patron's head will be prevented; with which the assembly or disassembly of the parts is facilitated; with which a desired minimum pressure will always be maintained at the spraying nozzles; with which the spraying nozzle may be manipulated in use with one hand and the flow from the nozzle controlled by the same hand in a simple and convenient manner; with which the lifting of the spraying nozzle for use will automatically start the pump; with which danger of clogging of the apparatus by the liquid will be largely prevented; with which any clogging which may occur will be at points easily accessible for cleaning without taking the apparatus apart; with which the discharge end will be self-cleaning to a considerable extent; and with which exposure to air of the liquid in places where it might tend to plug or clog the discharge apparatus will be reduced to a minimum.

Another object of the invention is to provide an improved and simple high speed pump which will be particularly useful in apparatus of this type; which will be free of springs and which will produce substantial pressures; with which no damage will be done if the delivery of the pump should be temporarily blocked; which will be relatively inexpensive, easily assembled, durable, dependable and compact.

Another object of the invention is to provide an improved coupling between the hose and a nozzle or pipe, with which the hose may be coupled to or uncoupled from a nozzle or pipe quickly and easily; with which a water-tight joint will be established without the use of special or additional gaskets, and without the use of external clamps and screws which tend to catch on clothing or other articles; and which will provide a coupling which externally is smooth, compact and attractive in appearance.

Another object of the invention is to provide an improved dispensing nozzle with which the dis-

charge orifice will be automatically cleaned in use; with which leakage will be a minimum; which will not require attention for packing for long periods of time; and which will be relatively simple, convenient and inexpensive.

Various other objects and advantages will be apparent from the following description of an embodiment of the invention, and the novel features will be particularly pointed out hereinafter in connection with the appended claims.

In the accompanying drawings:

Fig. 1 is an elevation of an apparatus constructed in accordance with this invention, and illustrating the position of the same when disposed for use in two adjacent booths of a beauty parlor;

Fig. 2 is a sectional elevation of a portion of the same to show the manner of hanging the nozzle on the switch hanger, the section being taken approximately along the line 2—2 of Fig. 1;

Fig. 3 is a longitudinal sectional elevation through one of the nozzles;

Fig. 4 is a transverse, sectional elevation through the nozzle at the coupling to the hose, the section being taken approximately along the line 4—4 of Fig. 3;

Fig. 5 is another transverse sectional elevation through the nozzle, the section being taken approximately along the line 5—5 of Fig. 3;

Fig. 6 is a sectional plan through the discharge end of the nozzle, the section being taken approximately along the line 6—6 of Fig. 3;

Fig. 7 is a sectional bottom plan of a part of the nozzle, the section being taken approximately along the line 7—7 of Fig. 3 and looking in the direction of the arrows;

Fig. 8 is a schematic wiring diagram illustrating the parallel control of the pump motor by the hose;

Fig. 9 is a transverse sectional elevation through the apparatus, the section being taken approximately along the line 9—9 of Fig. 1;

Fig. 10 is a front sectional elevation through the same, the section being taken approximately along the line 10—10 of Fig. 9;

Fig. 11 is a sectional plan through the pump and by-pass, the section being taken approximately along the line 11—11 of Fig. 10;

Fig. 12 is a transverse, sectional elevation through the pump, the section being taken approximately along the line 12—12 of Fig. 11;

Fig. 13 is a perspective of the rotor of the pump removed from the housing and with the valve plate removed therefrom; and

Fig. 14 is a perspective of the valve plate forming part of the rotor of the pump.

In the illustrated example of apparatus constructed in accordance with this invention, a casing or housing 1 is mounted in any suitable manner from a wall or over a booth partition 2, with a pair of hose 3 depending from the lower side of the housing 1, one on each side of the partition 2. Each hose terminates at its free end in a nozzle 4 by which a liquid may be discharged in close proximity to the head of a patron. The casing or housing 1 is open at its top, and a reservoir or tank 5 (Figs. 9 and 10) is formed to telescope down into the housing 1 through the open top thereof. The tank 5 is provided at its top edge with an outwardly extending flange 6 which, by resting upon the upper edge of the open top of the housing 1, limits descent of the tank or reservoir 5 into the housing 1. A removable cover (not shown) may be applied, if desired, to the top of the tank or reservoir 5 to exclude dust and dirt. The housing 1 may have a removable front panel 7 by which access to the interior of the housing may be obtained at any time for inspection or adjustment of parts, or for disconnection of the parts when it is to be disassembled.

A channel shaped bar or partition 8 is disposed across the interior of the housing 1, intermediate the top and bottom thereof and in close proximity to the inclined bottom wall of the tank or reservoir 5. This partition 8 is provided at its ends with downwardly turned flanges 9 which fit along the inner side walls of the housing 1 and are removably secured thereto in a suitable manner such as by screws 10 which pass through the side walls of the housing 1 and are threaded into the flanges 9 of the partition 8. A pump housing 11 has one end face 12 thereof removably attached thereto, such as by screws 13, and this plate 12 is angular in shape and with the angular arm extending from the housing 11 at the upper edge thereof so as to extend along and abut against the under face of the partition 8. The angular arm of this plate 12 may be removably secured to the partition 8 in any suitable manner, such as by screws 14 which pass through the angular arm of the plate 12 and are threaded into the partition 8.

The pump housing 11 has a tubular bearing boss 15 extending endwise therefrom at the end opposite the plate 12 (Fig. 11), and the shaft of the rotor 16 extends from the pump or working chamber 17 of the housing 11 through the bearing boss 15 to the exterior thereof. A packing gland 18 surrounds the rotor shaft 16 as it leaves the bearing boss 15 and provides an effective seal to prevent leakage along the bearing boss 15. This rotor shaft 16 is connected by a suitable flexible coupling 19 to the rotor shaft 20 of a motor 21. The motor 21 is preferably a synchronous or constant speed electric motor which has its rotor in approximate axial alignment with the rotor 16, and the flexible coupling 19, while it may be of any suitable type, may, for convenience and simplicity, be a stretch or length of rubber hose which is telescoped over and clamped in any suitable manner, such as by rings 22, to the shafts 16 and 20.

The motor 21 is removably secured in any suitable manner to the underface of the partition 8 such as, for example, by a strap 23 which extends like a cradle below and around the motor 21 and at its ends is secured, such as by screws 24, to the sides of the channel of the partition 8.

A pipe 25 is threaded into an inlet port 26 of the pump housing 11, which is at the top side of the housing in the drawings, and this pipe 25 extends through an aperture 27 (Fig. 10) in the partition 8 and upwardly through an aperture in the lower wall of the tank or reservoir 5. A T-shaped element or nipple 28 is threaded upon the end of the pipe 25 which extends into the tank 5 so as to provide a T-shaped or angular passage 29 opening horizontally into the tank 5. All liquid from the tank 5 must enter the nipple 28 in a horizontal direction in order to reach the inlet pipe 25, and thence pass to the pump, and I have found that this is effective in preventing the formation of a whirling vortex in the liquid in the tank while liquid is being withdrawn through the pipe 25. A nut 30 threaded upon the exterior of the pipe 25 at a point above the partition 8 acts as an adjustable abutment against which the bottom wall of the tank 5

may be clamped by a tightening or threading of the element 28 upon the upwardly projecting end of pipe 25.

Suitable gaskets 31 and washers 32 may be conveniently disposed on the pipe 25 between the opposite faces of the bottom wall of the tank 5 and the nut 30 and the nipple 28, with the gaskets 32 abutting the bottom wall of tank 5, so that by tightening the nipple 28 or nut 30 the gaskets will be compressed against the bottom of the tank 5 and will provide a water-tight connection from the interior of the tank 5 to the pipe 25. The output port 33 of the pump (Fig. 12) is disposed somewhat more than 180°, but less than 270°, from the inlet port 26 of the pump housing, the angle being measured in the direction of rotation of rotor shaft, which is clockwise in Fig. 12.

The pump housing 11 has a passage 34 into which the port 33 opens, and one branch of the passage 34 extends horizontally through a tubular extension 35 having therein a pressure relief valve of any suitable construction. In the illustrated example, the section of passage 34 within the tubular extension 35 is provided with a valve seat 36, against which a valve element 37 is forced by a spring 38 which is compressed, between the valve element 37 and an adjustable abutment 39 that is threaded into the outer end of the tubular extension 35. The outer end of the abutment 39 is provided with a button 40 by which it may be turned to thread the abutment 39 into or out of the tubular extension 35 and thus vary the pressure on the spring 38, and thereby vary the pressure which must exist in the passage 34 before it is sufficient to unseat the valve element 37 and allow the liquid to pass the seat 36 and enter a lateral passage 41 provided in the tubular extension 35.

A suitable packing gland 42 may be provided at the outer end of the tubular extension 35 through which the abutment 39 is threaded, so as to prevent leakage along the abutment 39. The lateral branch of the extension 35 in which the passage 41 is provided, is coupled by a union coupling 43 to a pipe or conduit 44 which extends up the rear of the housing 1 where it is coupled by a union 45 to an elbow 46. A pipe section 47 extends from the elbow 46 through an aperture in the rear wall of the tank 5 and is connected within the tank 5 to a downwardly turned elbow 48. Suitable gaskets 49 are compressed against opposite faces of the rear wall of the tank 5 around the pipe 47 so as to seal the opening through which the pipe 47 passes, it being understood that the gaskets 49 are compressed between the elbows 46 and 48.

The passage 34 also has a branch extending downwardly in the pump housing and into which a pipe 50 is threaded. The pipe 50 is connected through an elbow 51 and a pipe section 52 to a two-branch elbow 53. One branch of the elbow 53 opens downwardly therefrom through the bottom wall of the housing 1 where it is connected by a union 55 to one end of a hose 3. The other arm of the elbow 53 opens horizontally and is connected by a pipe 56 and an elbow 57 to a pipe 58 which depends through another opening in the bottom wall of the housing 1 at the opposite side of the housing from the depending pipe 54. The depending end of pipe 58 is similarly connected by a union coupling 59 to one end of a hose 3.

It will be observed that the output of the pump is delivered to the passage 34 and distributed to the hose 3 for use as needed, and any excess liquid passes the pressure relief valve, by unseating the valve element 37, and thence travels through pipe 44 to the upper part of the tank 5 where it is discharged back into the tank. The output of the pump is such that it normally supplies or delivers more liquid from the tank 5 than all the hose 3 can use, so that there will normally always be some of the liquid returned or recirculated through the tank 5 to keep the contents thereof uniformly mixed while the pump is operated. If one or both of the nozzles 4 are closed, the pressure built up in the pump will always unseat the valve element 37 and the unused liquid will then be returned to the tank for recirculation therethrough to keep the contents of the tank mixed.

While any suitable type of pump may be employed, I have found that the one illustrated is exceptionally simple, compact and practical for this purpose. The pump or working chamber 17 is cylindrical in shape, with the axis of the cylinder approximately horizontal and normal to the end plate 12, and parallel to the axis of the rotor shaft 16. The cylindrical chamber 17 is, however, horizontally displaced or eccentric to the axis of the rotor shaft 16. The rotor shaft 16 terminates within the pump or working chamber 17 in a cylindrical head 60 which is of substantially lesser diameter than the diameter of the chamber 17. The head 60 extends into close proximity to the wall of chamber 17 at one side thereof, such as at a point in a horizontal plane through the axis of the rotor shaft 16, but the periphery of this cylinder head 60 is spaced substantially from the opposite side of the chamber 17. The head 60, however, extends endwise entirely across the chamber 17, so that the only clearance is between the periphery of the head 60 and chamber 17. A slot 61 extends diametrically across the free end of the head 60 but has a depth less than the full length of the head, as shown in Figs. 11 and 13, and this slot 61 at its ends has branches 62 which extend along the sides of the head 60 for the full length thereof and which in depth extend approximately to the rotor shaft 16. This provides a tongue or body 63 (Figs. 11 and 12) within the head 60 which couples together the segments on opposite sides of the slots 61 and 62, and also additionally couples such segments to the rotor shaft 16.

It will be noted from the foregoing that the slots 61 and 62 together form a U-shaped slot or channel extending along the sides and across the free end of the head 60, so that the base of the U of the composite slot or channel is the slot 60 across the free end of the head 60. A valve plate 64, shown separately in Fig. 14, is U-shaped by reason of a notch 65 therein, and this plate 64 is disposed in the slots 61 and 62, with the notch or slot 65 of the valve plate straddling and embracing the uncut body or portion 63 of the head 60. The width of the notch 65 is greater than the corresponding width of the uncut body or portion 63 of the head 60, so that the valve plate 64 may reciprocate laterally in the head 60 and the slots 61 and 62, as shown in Figs. 11 and 12. The length of the plate 64, however, is the full length of the head 60, and the arms of the U of the plate 64 will always be within the slots 62 in all of the reciprocations of the valve plate in the slots of the head 60. The extreme width of the valve plate 64 is just slightly less than the diameter of the work chamber 17. This is necessary to enable the valve plate 64 to ro-

tate with the rotor head, because the axis of rotation of the rotor shaft **16** is offset horizontally and slightly from a vertical plane through the axis of the working chamber **17**. Therefore when the valve plate **64** is in a vertical position it will not pass through the axis of the working chamber **17**, but will be disposed slightly to one side thereof, and consequently it must be of slightly less width or diameter than the diameter of the chamber **17** in order that it may rotate with the head **60** freely in the chamber **17**.

Because of the eccentricity between the rotating head **60** and the peripheral wall of the working chamber **17**, the rotation of the valve plate **64** with the head **60** will cause the valve plate **64** to be reciprocated back and forth or transversely of the head **60** in the slots **61** and **62**, and will establish a sufficiently tight seal between the rotating head **60** and the peripheral wall of chamber **17**. As the head **60** rotates clockwise in Fig. 12, the plate **64** will define at one face thereof a progressively enlarging space between the head **60** and the wall of chamber **17**, until the valve plate **64** passes a vertical position, whereupon communication between that progressively enlarging space is cut off from the inlet port **26** and immediately thereafter the same space is connected to the outlet port **63**. Continued rotation of the valve plate **64** with the head **60** will create, in the rear of the plate **64** leaving the inlet port **26**, a new, progressively enlarging space, and the corresponding space in advance of that portion of the valve plate **64** will be gradually decreased and the contents of that space discharged forcibly through the port **33** into the passage **34**.

This procedure is repeated continuously upon rotation of the rotor **16**, and since the speed of rotation of the head **60** is relatively high by reason of its direct coupling to the rotor of the motor, close contact between the edges of the valve plate **64** and the peripheral wall of the working chamber **17** is unnecessary. While there may be some slippage of liquid past the valve plate, this will be insignificant because of the high speed of rotation and because the clearance between the valve plate **64** and the peripheral wall of the working chamber **17** will be at its maximum only when the valve plate is vertical where there is little pressure being exerted on the liquid at either side of the valve plate. The clearance between the valve plate **64** and the peripheral wall of chamber **17** will be a minimum as the valve plate approaches and passes horizontal positions where the pressure is a maximum, and therefore during most of the time when the pump is exerting its highest pressure, the clearance between the valve plate **64** and the wall of the chamber **16** will be the minimum and there will, at most, be but very slight slippage of liquid past the plate **64**. It will be noted that no springs are necessary in the rotor of the pump, and there will be very little wear between the rotary and stationary parts of the pump.

It is unnecessary for the motor and pump to operate when the device is not in use or when the delivery of liquid is not desired. Accordingly, the circuit of the motor is controlled in parallel by a pair of switches **66** which are connected in parallel to one another but in series with the motor **21**, as shown clearly in Fig. 8, it being understood that current is supplied to the motor through line wires L^1 and L^2. The switches **66** are connected in parallel to one another by wires **67** and **68**, and these wires are connected in parallel to wires **69** and **70**. The wire **70** is connected in series to the motor **21** and the wires **69** and **70** are, in effect, circuit extensions of the line wires L^1 and L^2. The movable element **71** of each switch is pivoted as at **72**, to any suitable support, and a spring **73** in each switch urges the element **71** of that switch into circuit-closing position, as shown in the left switch in Fig. 8. Each element **71** has an arm extending outwardly in a generally horizontal direction from the housing **1**, as shown in Figs. 1 and 10, so as to constitute a hanger upon which a nozzle **4** may be hung when not in use.

When a nozzle **4** is hung on one of the switch elements **71**, as shown at the right in Fig. 8, the weight of the nozzle and hose will overcome the pressure of spring **73**, and thus swing that element **71** into open circuit position, when the nozzle **4** is lifted from an element **71**, as at the left in Fig. 8, the spring **73** will shift the element **71** automatically into circuit-closing position to start operation of the motor. It will be observed that if both nozzles **4** are hung up on the arm **71**, the circuit to the motor **21** will be opened, but the lifting of either nozzle **4** from its hanger arm **71** will immediately result in a closing of the circuit to the motor and the starting of the pump. Thus, all one has to do to use the apparatus is to lift nozzle **4**, and pressure is at once placed on the liquid in both hose **3**. The motor and pump will continue to operate so long as one of the nozzles **4** is lifted from its hanger.

While any suitable nozzle may be employed, I have illustrated in Figs. 2 to 7 a nozzle which is particularly useful in this apparatus and, particularly so, where rather heavy, viscous liquids, such as wave-set lotions may be employed and which have a tendency to set or harden when exposed to air at the discharge orifice of the nozzle.

Referring now particularly to Figs. 2 to 7, the body of the nozzle **4** is provided with a passage **74** which terminates at the free end of the body in a laterally extending passage **75** extending into a sleeve **76** which is removably attached to the nozzle body, such as by threading it thereto. The walls of the passage **75** are outwardly convergent to a discharge orifice **77** so as to function somewhat as an ordinary nozzle for discharging a high velocity but concentrated rod-like stream of liquid through the orifice. The end of the sleeve **76** beyond the orifice is preferably bevelled inwardly as at **78** for a reason which will appear presently.

Within the body of the nozzle **4** and extending along the lateral passage **75** is a valve rod **79** which extends outwardly through the body of the nozzle **4** at the end of the passage **75**, opposite from the discharge orifice, and the outer end of the rod **79** is provided with a flanged head **80**. Packing **81** is disposed around the rod **79** within the passage **75** at the end thereof through which the rod **79** passes outwardly, and a pressure plate **82** surrounds the rod **79** and presses the packing **81** against the opening in the body through which the rod **79** extends and around the rod **79** so as to effectively prevent leakage along rod **79**. A spring **83** surrounds the rod **79** in the passage **75** and is compressed between the plate **82** and a shoulder or collar **84** provided on the inner end of the rod **79**. This spring **83** thus performs a double function of pressing the packing around the rod **79** and also urging the rod **79** into the body of the nozzle but yielding to permit outward movement of the rod **79**.

A needle or tapered valve element **85** is articulately connected to the inner end of the rod **79** so

as to form an articulated extension thereof, and this tapered element or needle extends along the converging section of the passage **75** and normally through the orifice **77** far enough to close the orifice. The bevelled cavity **78** in the end of the sleeve **76** protects this projecting end of the needle or valve element **85** against injury, and prevents injury to a person through accidental bumping of sleeve **76** against the skin or clothing. The needle or valve element **85** is preferably universally connected or jointed to the rod **79**, so that it may swing to a limited extent and thus always seat perfectly in the orifice **77**, and the tapered or converging passage will always guide this needle into proper seating position in the orifice **77**.

A lever **86** is hinged as at **87** to the exterior of the body nozzle **4**, with the lever **86** extending generally along and in close proximity to the body of the nozzle, but preferably at the side thereof opposite the discharge orifice **77**. One arm of this lever **86** has a flanged portion **88** which engages beneath the head **80** of the valve rod **79**, and thus when the opposite end of the lever **86** is depressed, the valve rod **79** will be shifted endwise to retract the needle **85** from the orifice **77**, allowing the liquid in the passage **75** to be discharged through the orifice. When the lever **86** is released, the spring **83** will automatically return the needle **85** to closed position and return the lever **88** to its normally inactive position shown in Fig. 3. Thus, as the nozzle body is grasped in the hand to enable its convenient and easy manipulation around the head of a patron, the same hand may easily depress or operate the lever **86** and open the valve needle **85**, or release it to allow closing of the valve needle **85** at will.

In order to provide a smooth coupling between the hose **3** and each nozzle **4** and enable quick attachment or detachment of the hose **3** from the nozzle, I have illustrated in Fig. 3 a very practical and simple coupling. The horizontal passage **74** of the body of the nozzle is enlarged as at **89**, and this enlargement continues to the outer end of the nozzle body. A sleeve **90** is threaded into this enlarged end **89** to some extent, but not entirely to the junction or shoulder **91** between the enlarged and normal sections of the passage **74**. Into the end of the hose **3** I insert for a short distance, a rigid tube **92**, which, a short distance from its outer end, is provided with a peripherally and outwardly extending bump **93** which produces a similar peripherally and outwardly extending bump **94** in the hose a short distance from its free end.

The sleeve **90** is, of course, put over the adjacent end of the tube **3** before the tube **92** is placed in the latter, and with the sleeve **90** removed from the nozzle body **4**, the end of the hose **3** is inserted into the enlarged end **89** until the pump **94** of the hose engages against the shoulder **91**, as shown in Fig. 3. The sleeve **90** is then threaded into the enlarged end **89** of the passage **74** and the inner end of this sleeve **90** is preferably bevelled to engage against the bump **94** of the hose and force or compress the hose, and particularly the bump thereof, against the shoulder **91** to effect a gasket-like seal between them. The sleeve **90** thus secures the hose **3** to the nozzle body and the hose itself forms a gasket-like seal. It will be noted that there are no external clamps, rings or screws in this coupling of the hose **3** to the nozzle, which would tend to catch on the clothing or injure one's hands, and the connection is extremely compact, yet it takes but a moment to couple or uncouple the hose from the nozzle. A similar coupling may unite each hose **3** to its union **55** or **59**.

In use, the housing **1** is supported upon a wall of the room at approximately the partition **2** between adjacent booths, or supported directly upon the partition **2** as may be desired, but with the hose **3** depending down along opposite sides of the partition **2**, one into each booth. When an operator or attendant desires to spray a liquid, such as wave set lotion, upon the scalp hair of the patron, the nozzle **4** in the booth occupied by the patron is lifted from its hanger **71**, and thereupon that hanger moves into switch closing position, which starts operation of the motor and drives the pump at the normal pumping speed. The pump delivers the liquid from the tank **5** to both hose **3** at the pressure for which the relief valve spring **38** is set. The operator, grasping the nozzle **4** in the hand, points the discharge orifice **77** towards the scalp hair and at close range, and with the same hand operates the lever **86** to retract the needle valve **85** from the orifice **77**. The liquid is then discharged through the orifice of that nozzle against the scalp and scalp hair.

The stream of liquid so discharged is a small, rod-like stream of high velocity because of the tapering passage **75**, whereas heretofore the spraying nozzles have usually been of the type which produce a spreading or spray stream rather than a rod-like, concentrated stream. If the stream discharged is of the spray type or spreading stream, the fine particles into which it is broken have so little inertia that they lodge upon the outside of the mass of scalp hair and remain there, and it is difficult then to work this deposit of liquid into the mass of hair and against the scalp so as to thoroughly coat the portion of the hair close to the scalp, which is extremely important in wave set lotions. I have found that pressures of upwards of twenty pounds per square inch on the liquid in hose **3** is desirable in order to obtain sufficient force in and velocity of the discharge stream, for the best results, and pressures up to thirty pounds or more per square inch are usually better because with higher pressure, more of the liquid is forced through the mass of hair against the scalp.

This small, rod-like stream under substantial force and velocity in striking a mass of scalp hair will pentrate the same and reach the scalp where it spreads to some extent and remains within the mass of hair being subjected to the stream. Thus the attendant merely moves the nozzle around the head of the patron while discharging the stream of liquid against the scalp hair, and aids, where possible, the penetration of hair by the liquid by spreading the mass of hair to some extent at different points, until a sufficient quantity has been placed on the scalp. The operator then releases the lever **86** and rehangs the nozzle on its hanger, which automatically stops the motor and pump unless the other hose is in use. The attendant then takes a comb, or uses his or her fingers, and works the hair which has been so treated so as to spread the liquid more uniformly over the scalp and wet the hair throughout its entire length. The combing and working of the hair, particularly the combing, tends to work or bring this lotion or liquid outwardly through the mass of hair to the exterior thereof, and I have found that this gives a more uniform wetting and coating of the hair from the scalp outwardly than by any other known method, and requires a lesser quantity of the lotion or liquid.

Where the hair is not wet at the time this lotion or liquid is to be applied, the lotion or liquid, which is merely applied to the outer surface of a mass of hair, tends to remain on the surface or outer area of the hair and will not spread readily towards the scalp. I have found that by discharging the liquid in a small rod-like stream under substantial force, the liquid will penetrate the mass of hair readily, whether it is dry or wet, and reach the scalp, and then by combing or working the hair, this liquid may be brought out through the hair and uniformly coats it. Thus, by this method, the wave set lotion or tonic, for example, may be easily applied to the hair while the hair is dry, with excellent results, maximum speed and minimum use of the liquid, and the scalp as well as the hair is thoroughly coated with the liquid. In the case of hair tonics, as is well known, it is desired to get the liquid to the scalp rather than upon the hair, and by this improved method the scalp may be thoroughly coated with the tonic or the wave lotion with a minimum of liquid used. The use of a comb in working the wave lotion outwardly through the hair makes it unnecessary for the attendant to smear his or her hands to any great extent, and the liquid is so easily and uniformly distributed, and applied in such small quantities at different areas of the scalp that there is very little tendency of the liquid to run down the face or neck of the patron.

With the hand-operated spray pumps heretofore employed, only a very little pressure on the discharge stream was obtained, the stream produced was largely of the spray type, and the liquid tended to drip down the spray device and then, when placed upon a shelf or table, would smear and soil the surface on which it rested. With this improved method and apparatus, when one finishes with the nozzle, it is hung up in a position where it does not smear anything, and there is no drip which contaminates the support for the nozzle because the discharge orifice is at the extreme end of the discharge passage and nozzle, so that there is no body of liquid retained in the discharge passage after closing of the valve, which would tend to drip or run out. To install this device, it is merely necessary to hang the housing 1 in a convenient position and connect the line wires L^1 and L^2 to any suitable source of current, whereupon the device is ready for use. Hence, it may be readily installed by beauty parlor operators without the employment of skilled assistance, such as electricians, pipe fitters or mechanics.

The recirculation of the liquid during use keeps the contents of the liquid in the tank thoroughly mixed, so as to prevent stratification of the constituents of the liquid, and the device is always ready and convenient for instant use. Because of the fact that the stream of discharged liquid may be continuous for a substantial interval of time, or as long as desired, the liquid may be applied to the scalp or the hair of the patron more rapidly than has heretofore been possible. Thus, a substantial saving in time in the application of the liquid results, and this time saving is advantageous to the patron as well as the operator.

It will be understood that various changes in the details, materials and arrangements of parts, which have been herein described and illustrated in order to explain the nature of the invention, may be made by those skilled in the art within the principle and scope of the invention, as expressed in the appended claims.

I claim as my invention:

1. The method of applying a liquid to hair on the scalps of persons, which comprises forcing a small, rod-like stream of said liquid against a mass of said hair with sufficient force and velocity to penetrate said mass and reach the scalp, and then combing the hair to work the applied liquid outwardly through the mass to wet it uniformly.

2. The method of applying a liquid to hair on the scalps of persons, which comprises forcing a small, rod-like stream of said liquid against a mass of said hair with sufficient force to penetrate said mass and reach and spread upon the scalp, and then working the hair and scalp to spread the liquid further over said scalp and bring it back through the mass to the outside thereof and uniformly wet the hair of said mass.

3. The method of applying a wave set liquid to scalp hair, which comprises directing a rod-like stream of said liquid under continuous pressure of more than twenty pounds per square inch against a mass of scalp hair at close range and then working the hair to spread the liquid over the scalp and wet the hair uniformly with it.

4. Apparatus for applying a liquid to scalp hair which comprises a reservoir for said liquid, a pump connected at its intake side to said reservoir, a motor connected to said pump to drive it, a flexible hose connected to the output side of said pump to receive liquid therefrom, a nozzle at the free end of said hose with a restricted discharge nozzle orifice of a type which will discharge a rod-like stream of liquid delivered by said pump, and a valve at the nozzle having a movable control member positioned exteriorly of said nozzle for operation by the hand holding the nozzle while the nozzle is being manipulated.

5. Apparatus for applying a liquid to scalp hair, which comprises a source of said liquid under pressure, a flexible hose leading from said source and connected thereto, a nozzle at the free end of said hose and having a discharge passage, a valve in said nozzle to control fluid flow therethrough and having a movable control member positioned exteriorly of the nozzle for operation by the hand holding the nozzle while the nozzle is being manipulated.

6. Apparatus for applying a liquid to scalp hair, which comprises a source of said liquid under pressure, a flexible hose leading from said source and connected thereto, a nozzle at the free end of said hose and having an outwardly converging discharge passage, a valve in said nozzle to control fluid flow therethrough and having a movable control member positioned exteriorly of the nozzle for operation by the hand holding the nozzle while the nozzle is being manipulated.

7. Apparatus for applying a liquid to scalp hair, which comprises a source of said liquid under pressure, a flexible hose leading from said source and connected thereto, a nozzle at the free end of said hose and having a discharge passage, a valve in said passage at the discharge end thereof and having an operating portion extending to the exterior of the nozzle in a position for operation by the hand holding the nozzle while the nozzle is being manipulated.

8. Apparatus for applying a liquid to scalp hair, which comprises a source of said liquid un-

der pressure, a flexible hose leading from said source and connected thereto, a nozzle at the free end of said hose and having a discharge passage, a valve in said passage with a needle end universally mounted in the passage and its pointed end projecting through the discharge end of the passage, said valve having an operating portion extending to the exterior of the nozzle in a position for operation by the hand while holding and manipulating the nozzle, to retract it into said passage and pass fluid.

9. Apparatus for applying liquids to scalp hair which comprises a reservoir, a pump connected at its intake side to said reservoir, a motor connected to said pump to drive it, a flexible hose connected at one end to the output side of said pump to receive liquid therefrom, means including a hanger for said hose and operable when the hose is hung on the hanger to stop the motor and when the hose is removed therefrom to start the motor automatically, a nozzle carried by the free end of said hose and having a converging tapered passage leading to a discharge orifice, and a valve in said passage and operable to block discharge from the nozzle at the orifice, and having a movable control member positioned exteriorly of the nozzle for operation by the hand holding the nozzle while the nozzle is being manipulated.

10. Apparatus for applying liquids to scalp hair which comprises a reservoir, a motor-operated pump connected at its intake side to said reservoir, a flexible hose connected to the outlet side of said pump to receive liquid therefrom, a nozzle at the free end of said hose and having a passage formed to discharge a rod-like stream of the liquid delivered by said pump, a valve at the nozzle having a handle portion operable by the hand manipulating the nozzle, to control the discharge at the nozzle, and a pressure relief by-pass from the output side of said pump to said reservoir at a point spaced from the outlet from the reservoir, whereby a minimum pressure will be maintained on the liquid in the hose whether the valve at the nozzle is open or closed, and some of the liquid delivered by the pump will be discharged back into the reservoir to recirculate therethrough, keep the liquid in the reservoir mixed, and prevent stratification of the constituents of such liquid in the reservoir.

11. Apparatus for applying liquids to scalp hair which comprises a reservoir, an outlet connection leading from the bottom of the reservoir, delivery means including a flexible hose connected to said outlet connection, said outlet connection to the bottom of said reservoir including a conduit extending upwardly into the reservoir and terminating in a lateral opening, whereby the formation of a whirling vortex of the liquid in the reservoir during the removal of the liquid will be prevented.

12. Apparatus for applying liquids to scalp hair which comprises a reservoir, a pump connected at its intake side to the power part of said reservoir, a motor driving said pump, a pipe connected to the output side of said pump and divided into a plurality of discharge branches, a flexible hose connected to each branch of said pipe, a nozzle carried by the free end of each hose and having a flow-controlling member carried thereby and having an operating portion extending to the exterior of the nozzle in a position for operation by the hand that may be holding and manipulating the nozzle, a hanger for the free end of each hose, and means operable by each hanger when the hose is lifted therefrom for starting the operation of the motor and when the hose is hung thereon for stopping operation of the motor, said last named means being electrically connected in parallel with one another, whereby the lifting of any hose from its hanger will start the operation of the motor and the hanging of all hose on the hangers will stop the operation of the motor, and a pressure opened, release by-pass connected between the output side of the pump and the reservoir, whereby the excess liquid delivered by the pump during operation thereof may recirculate through the reservoir to keep the contents of the reservoir thoroughly mixed.

13. In apparatus for applying liquids to scalp hair, an improved pump comprising a housing having a cylindrical chamber therein, a shaft rotatably mounted in a wall of said housing which forms an end of said chamber, the axis of said shaft being disposed eccentrically to the axis of said chamber but parallel thereto, a cylindrical head on the end of said shaft within said chamber and which is of lesser diameter than the diameter of said chamber but concentric with said shaft, said cylindrical head extending across the chamber from end to end and having a slot extending diametrically across the free end thereof and then along the opposite sides thereof for the full length of said head, but said slot extending only partially through the head so as to have a U-shape with the base of the U at the free end of said head, a U-shaped plate disposed in said slot with the arms of the U extending along the sides of the slot in the head and with the base of the U of said plate extending across the portion of said slot in the free end of the head, the distance between the arms of the U of said plate being greater than the distance between the slots at the opposite sides of said head, whereby said plate may slide laterally of the head in said slot, said plate having a width from side to side close to but slightly less than the diameter of said chamber, whereby when said head rotates in said chamber, said plate will be reciprocated laterally while rotating with the head by the eccentricity between the head and the chamber, and said housing having inlet and outlet passages leading to the peripheral zone of said chamber at points spaced more than 180° apart in the direction of rotation of said head.

14. Apparatus for applying liquids to scalp hair and the like which comprises a casing open at its top, a partition extending across said casing intermediate its top and bottom and removably secured within the casing, an electric motor attached to said partition so as to depend from the same into the portion of said casing beneath the partition, a rotary type pump also secured to said partition so as to depend therefrom into the lower part of said casing, means including a flexible coupling for directly connecting and coupling the rotors of said motor and said pump, a pipe extending from the inlet side of said pump upwardly past said partition and through the bottom wall of said reservoir, a nipple removably attached to the projecting end of said pipe within said reservoir, said pipe immediately below the reservoir having a shoulder against which the bottom wall of the reservoir is clamped by said nipple, said nipple having an opening therethrough by which liquid may flow from said reservoir through said pipe to the intake side of said pump, a pipe extending

from the output side of said pump outwardly through said casing, a flexible hose connected to the outer end of said last named pipe so as to form a flexible continuation thereof, a switch connected to said motor to control its operation and having its movable member disposed exteriorly of the casing to act as a hanger for said hose, said hose terminating in a nozzle having a valve therein which controls fluid flowing through the nozzle, the movement of said hanger, when the hose is hung thereon, automatically opening the circuit therethrough to said motor, and its movement when the hose is lifted therefrom automatically closing a circuit therethrough to said motor, and a pressure relief valve connected to the output side of said pump and having a by-pass therefrom extending to the upper part of said reservoir to return excess liquid to the reservoir at a distance from said nipple.

15. Apparatus for applying liquids to scalp hair and the like which comprises a casing open at its top, a partition extending across said casing intermediate its top and bottom and removably secured within the casing, an electric motor attached to said partition so as to depend from the same into the portion of said casing beneath the partition, a rotary type pump also secured to said partition so as to depend therefrom into the lower part of said casing, means including a flexible coupling for directly connecting and coupling the rotors of said motor and said pump, a pipe extending from the inlet side of said pump upwardly past said partition and through the bottom wall of said reservoir, a nipple removably attached to the projecting end of said pipe within said reservoir, said pipe immediately below the reservoir having a shoulder against which the bottom wall of the reservoir is clamped by said nipple, said nipple having an opening therethrough by which liquid may flow from said reservoir through said pipe to the intake side of said pump, a pipe connected to the outlet side of said pump and sub-divided into a plurality of branches, with each branch extending downwardly from the casing, a flexible hose detachably coupled to the downwardly projecting ends of said branch pipes, each hose having a valve-controlled nozzle at its free end, a circuit for said motor, a plurality of switches in parallel to one another in said circuit and exercising parallel control of said motor, each switch having a hanger extending outwardly of the casing and movable to open the circuit therethrough when moved downwardly and close it automatically when moved upwardly, and spring means for lifting each hanger upwardly, when released, into circuit-closing position, whereby when any hose is hung on a hanger, the weight of the hose will move the latter into open circuit position, and when any hose is lifted it will start the operation of said motor, and when all hose are hung on their hangers, the motor will stop.

16. Apparatus for applying liquids to scalp hair and the like which comprises a casing open at its top, a partition extending across said casing intermediate its top and bottom and removably secured within the casing, an electric motor attached to said partition so as to depend from the same into the portion of said casing beneath the partition, a rotary type pump also secured to said partition so as to depend therefrom into the lower part of said casing, means including a flexible coupling for directly connecting and coupling the rotors of said motor and said pump, a pipe extending from the inlet side of said pump upwardly past said partition and through the bottom wall of said reservoir, a nipple removably attached to the projecting end of said pipe within said reservoir, said pipe immediately below the reservoir having a shoulder against which the bottom wall of the reservoir is clamped by said nipple, said nipple having an opening therethrough by which liquid may flow from said reservoir through said pipe to the intake side of said pump, a pipe connected to the outlet side of said pump and sub-divided into a plurality of branches, with each branch extending downwardly from the casing, a flexible hose detachably coupled to the downwardly projecting ends of said branch pipes, each hose having a valve-controlled nozzle at its free end, a circuit for said motor, a plurality of switches in parallel to one another in said circuit and exercising parallel control of said motor, each switch having a hanger extending outwardly of the casing and movable to open the circuit therethrough when moved downwardly and close it automatically when moved upwardly, spring means for lifting each hanger upwardly, when released, into circuit closing-position, whereby when any hose is hung on a hanger the weight of the hose will move the latter into open circuit position, and when any hose is lifted it will start the operation of said motor, and when all hose are hung on their hangers, the motor will stop, a pressure relief valve connected to the output side of said pump, and a conduit connecting the discharge side of said pressure relief valve to the upper part of said reservoir so as to recirculate through the reservoir any liquid delivered by the pump and unable to escape through one of said nozzles.

17. In an apparatus for delivering liquids, the combination of a flexible hose for receiving the liquid under pressure, a nozzle having a passage therein terminating at its entrance end in an enlarged passage with a shoulder between the normal passage and the enlarged passage, a rigid tube forced within the free end of said hose and having a peripheral bump adjacent the outer end thereof which, when forced into the passage of the hose, forms a peripherally extending bump in the hose adjacent but spaced slightly from its free end, said free end of the hose with rigid tube therein being inserted into the enlarged section of said nozzle passage until the peripheral bump of said hose abuts said shoulder, a sleeve surrounding said hose at the rear of said peripheral bump, telescoping within the enlarged section of said passage at the outer end thereof and having a shoulder engaging with said peripheral bump of the hose to clamp the same against the shoulder at the junction of the different size passages of said nozzle, whereby a quickly attachable and detachable, liquid-tight coupling between the hose and nozzle is obtained.

18. In apparatus for delivering a liquid in stream form, an improved delivery nozzle therefor comprising a body having a passage therethrough and terminating at its discharge end in an outwardly converging section leading to the discharge orifice, a rod mounted for reciprocation approximately axially of said converging section of said passage and extending outwardly through said body, a packing gland disposed within the passage where said rod extends outwardly through said body, with a packing ring surrounding said rod, and also having a movable pressure plate slidable on said rod for compressing the packing ring against the wall of said passage through which said rod extends, said rod having

within the passage a shoulder, a spring compressed between said shoulder and said plate for urging said rod in a direction to draw it into said passage and to compress said plate against said packing ring, and a tapered needle point universally articulated to the inner end of said rod so as to form an extension thereof, said needle point extending along said converging passage and through said orifice to close the same, and means mounted on and exteriorly of said body and operable on the outer end of said rod for moving said rod to retract its needle extension from the orifice sufficiently to pass liquid through the converging passage and orifice.

19. The method of applying a liquid to scalp hair, which comprises directing a rod-like stream of said liquid under continuous pressure of more than twenty pounds per square inch against a mass of scalp hair at close range, and then working the hair to spread the liquid over the scalp and wet the hair uniformly with it.

ADOLPH K. SINGERMAN.