March 15, 1938. D. E. EVANS 2,111,095

CARDING DEVICE FOR INTERCHANGEABLE ARTIFICIAL TEETH

Filed March 9, 1936 3 Sheets-Sheet 1

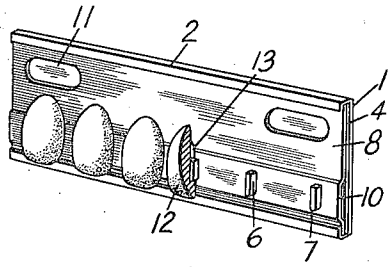

Fig. 1

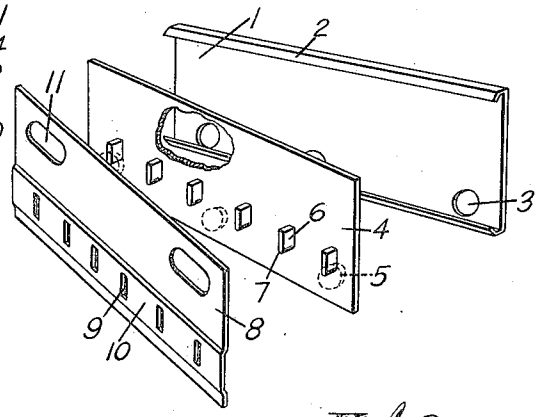

Fig. 2

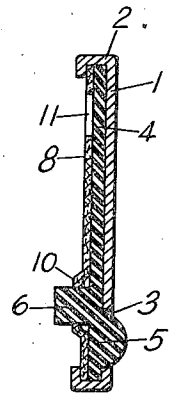

Fig. 3

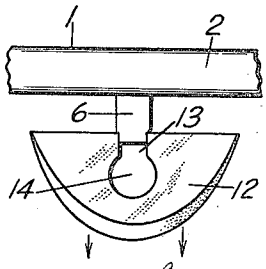

Fig. 4

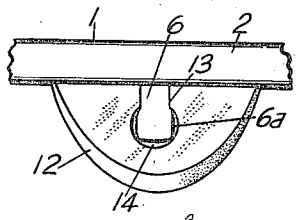

Fig. 5

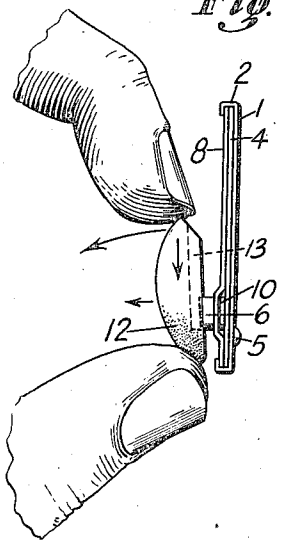

Fig. 6

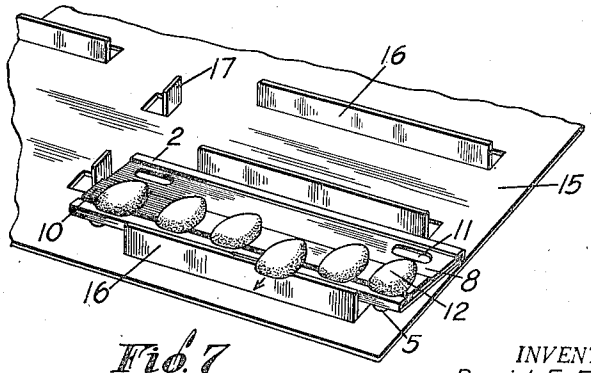

Fig. 7

INVENTOR.
David E. Evans.

BY
Corbett & Mahoney
ATTORNEYS.

March 15, 1938. D. E. EVANS 2,111,095

CARDING DEVICE FOR INTERCHANGEABLE ARTIFICIAL TEETH

Filed March 9, 1936 3 Sheets-Sheet 2

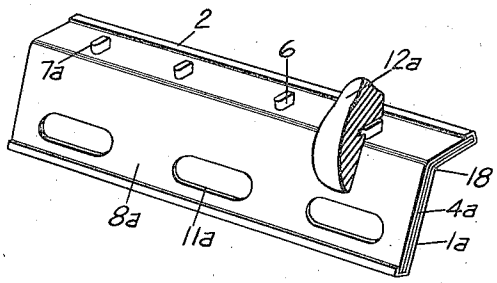

Fig. 9

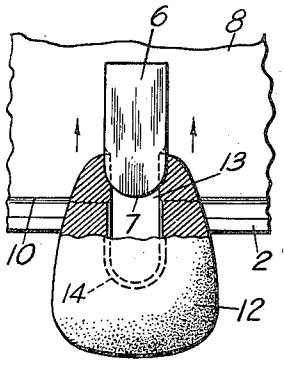

Fig. 8

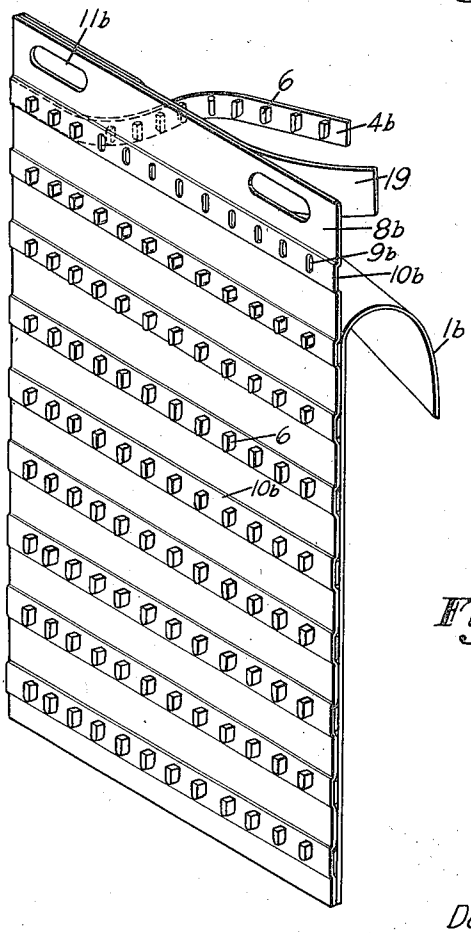

Fig. 10

INVENTOR.
David E. Evans.

BY
Barber & Mahoney
ATTORNEYS.

CARDING DEVICE FOR INTERCHANGEABLE ARTIFICIAL TEETH

Filed March 9, 1936 3 Sheets-Sheet 3

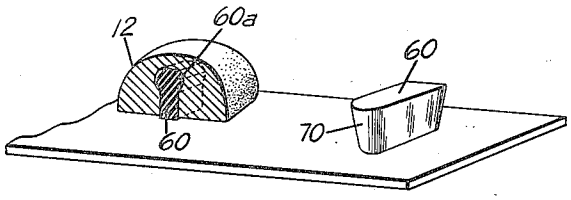

Fig. 11

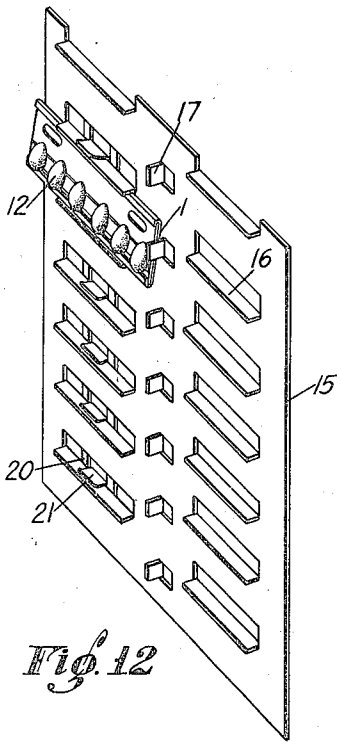

Fig. 12

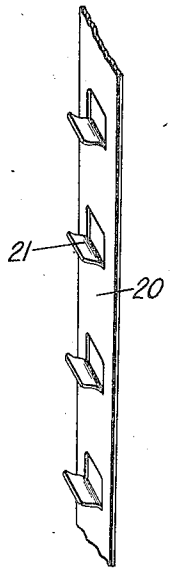

Fig. 13

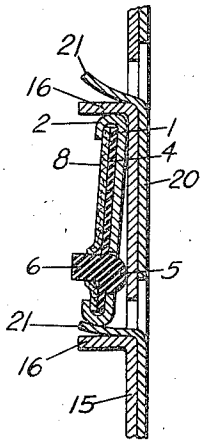

Fig. 14

INVENTOR.
David E. Evans.

BY
Cobb & Mahoney
ATTORNEYS.

Patented Mar. 15, 1938 2,111,095

UNITED STATES PATENT OFFICE

2,111,095

CARDING DEVICE FOR INTERCHANGEABLE ARTIFICIAL TEETH

David E. Evans, Columbus, Ohio, assignor to The Columbus Dental Manufacturing Company, Columbus, Ohio, a corporation of Ohio

Application March 9, 1936, Serial No. 67,792

13 Claims. (Cl. 206—83)

My invention relates to a carding device for interchangeable artificial teeth. It has to do, more particularly, with a device for supporting a number of such teeth in order that they may be conveniently handled or shipped and in order that they may be conveniently and attractively displayed.

Certain interchangeable teeth are provided with slots in the rear or undersurfaces thereof in order that they might be secured to crown and bridgework. Consequently, many carding devices used in the past have embodied a plurality of lugs mounted on cards or other suitable supports which cooperate with the slots in the artificial teeth for mounting the teeth on such cards or supports. At first these lugs were made of metal. However, the metal lugs tended to chip the teeth unless the teeth were removed and replaced on the device with extreme care. In order to overcome this disadvantage, the metal lugs have, in some cases, been replaced by lugs formed of paper or cardboard or other flexible non-metallic material. In one form, these lugs were formed by providing a strip of paper or cardboard and doubling it at intervals and then passing the doubled portions through slots in a card or support in order to form yieldable lugs projecting through the card adapted to fit into the slots in the teeth in order to hold the teeth on the card. This structure is much more suitable than the metallic lug structure but has certain disadvantages.

The paper or cardboard lugs are not inherently resilient but are resilient merely as a result of being bent into loop form. Consequently, careless placement of teeth on the lugs or careless removal tends to cause the paper lugs to be forced out of shape and they do not return to their original shape. After they lose their shape they will not effectively hold the teeth in place. After the teeth have been removed and replaced a number of times, the paper lugs will ravel or fray. Consequently, they cannot be used for any considerable length of time.

One of the objects of my invention is to provide a carding device which is provided with means for effectively mounting the teeth thereon, said means being of such a nature that the teeth will not be injured, as by cracking or chipping, regardless of whether or not care is used in applying the teeth to the device or removing them therefrom.

Another object of my invention is to provide a carding device of the type indicated which is provided with means for receiving and retaining the teeth, said means embodying lugs which will retain their original shape, and which will not wear to any appreciable extent because of constant removal and replacement of the teeth.

In its preferred form my invention contemplates the provision of a carding device embodying a back member of suitable material and a front member of suitable material. Between the back and front members, another member is disposed which carries a plurality of lugs formed of inherently resilient material, such as rubber. These lugs project through a plurality of slots formed in the front member. The inherently resilient lugs project from the front member a considerable distance and are adapted to project into the slots formed in the rear surface or undersurface of the teeth adapted to be mounted thereon. Because the lugs are formed of inherently resilient material, regardless of how the teeth are applied to the device or removed therefrom, there will be no injury either to the teeth or to the lugs.

The preferred embodiment of my invention is illustrated in the accompanying drawings wherein similar characters of reference designate corresponding parts and wherein:

Figure 1 is a perspective view of a carding device made in accordance with my invention showing how teeth may be mounted thereon.

Figure 2 is a perspective view illustrating the various parts of the device shown in Figure 1 in disassembled relationship.

Figure 3 is a transverse section taken through the device illustrated in Figure 1.

Figure 4 is a more or less diagrammatic view illustrating how a tooth may be pulled off one of the resilient lugs.

Figure 5 is a similar view illustrating how the inherently resilient lug acts to maintain the tooth on the device.

Figure 6 is a side elevation of the device shown in Figure 1 illustrating by the arrows various ways in which the tooth may be removed from the lug.

Figure 7 is a view in perspective illustrating a member for supporting a plurality of the carding devices of the type shown in Figure 1, one of such devices being shown mounted thereon.

Figure 8 is a view illustrating the preferred way of mounting the tooth on the inherently resilient lug, the tooth being shown partly broken away.

Figure 9 is a perspective view of a carding device similar to that illustrated in Figure 1 but designed for supporting a different type of tooth.

Figure 10 is a perspective view of a carding device for supporting a large number of teeth, for example for shipping purposes, or for keeping of stock.

Figure 11 is a perspective view, partly broken away, illustrating a tooth-retaining lug of slightly different shape.

Figure 12 is a perspective view of a member like that shown in Figure 7 for holding a plurality of the carding devices of the type shown in Figure 1, the member being provided with resilient clips for normally holding the carding devices in position thereon.

Figure 13 is a perspective view of a portion of one of the spring clips adapted to be disposed on the member illustrated in Figure 12.

Figure 14 is a vertical section taken through a portion of the device illustrated in Figure 12 and showing how the spring clip functions.

With reference to the drawings and particularly to Figures 1, 2 and 3, I have shown my carding device as comprising a back plate 1 of substantially rectangular form. This back plate 1 is preferably made of aluminum. It is elongated and has a flange 2 on each longitudinal edge, each flange being bent upwardly from the plate 1 and then inwardly towards the longitudinal center line thereof. Adjacent one of the longitudinal edges of the plate 1 it is provided with three circular apertures 3.

I provide a member 4 which is adapted to be mounted on the back plate. This member 4 is of substantially the same size as the back plate 1. It comprises mainly a sheet or strip of rubber or other inherently resilient material. I preferably use white rubber. This member 4 is adapted to be positioned on the back plate 1 between the flanges 2, as indicated. On the rear surface of this member I provide three bosses 5 which are formed integral therewith and project rearwardly therefrom. These bosses are properly spaced apart so that when the member 4 is mounted on back plate 1, they will project through the openings 3. As shown in Figure 3, they project rearwardly through the openings 3 a considerable distance. Thus, the bosses 5 will cooperate with the apertures 3 to maintain the member 4 in position on the member 1 and to prevent relative longitudinal movement therebetween. These bosses have other functions which will be referred to hereinafter.

The member 4, at a point adjacent its lower edge, is provided on its face with a plurality of lugs 6 which project forwardly therefrom a considerable distance. These lugs are disposed in a row at longitudinally spaced intervals. The lugs are formed as an integral part of the member 4 and are of the same material. Consequently, they are inherently resilient. Each lug is of narrow elongated cross-section. One of the ends of each lug 6 is chamfered as at 7, see Figure 8, in order to facilitate application of a tooth thereto.

A front member 8 is adapted to cover the member 4. This front member 8 is preferably made of cardboard or other suitable material. It is of substantially the same size as the member 4 and is adapted to be mounted in covering relation thereto as indicated in Figure 1. The member 8 is held in position by the flanges 2 of the back plate 1 as indicated in the drawings. Adjacent its lower edge the member 8 is provided with a row of longitudinally spaced slots 9. These slots are so arranged and so spaced that the lugs 6 on member 4 will project therethrough as indicated. At the point where the slots 9 are formed in member 8, it is pressed outwardly in order to form a shelf or ledge 10, as illustrated in the drawings. This ledge or shelf is provided for a purpose to be described hereinafter. The lugs 6, however, project from the member 4 a sufficient distance so that they project through the slots 9 a considerable distance beyond the outer surface of the ledge or shelf 10. The card or front member 8 may have the brand or trade-mark of the teeth or other printed matter thereon. Adjacent its upper edge it is provided with a pair of apertures 11. These apertures expose the member 4 so that it may be written on at these points. It is sometimes desirable to write certain indicia on the carding device in order to indicate the size, color, etc., of the teeth. With this structure, it is possible to write on the portions of the member 4 disposed beneath the apertures 11 in member 8. Since the member 4 is made of white rubber, it may be written on with pencil and the marks may be readily erased.

In Figure 1 I have illustrated how this device may be employed for mounting a plurality of teeth. As shown best in Figures 4 and 5, each tooth or facing 12 is provided with a narrow slot 13 formed in the rear surface thereof. Directly in front of the slot 13 a post hole 14 is formed in parallelism with and in communication with the slot. This post hole is of substantially circular cross-section. The slot 13 and the post hole 14 are provided in order that the artificial tooth or facing may be mounted on crown or bridge work in a well known manner. The slot and post hole extend from the gingival end of the facing or tooth to a point spaced from the incisal end of the facing or tooth, as indicated in Figures 1 and 8. Thus, the slot and post hole have their gingival ends open and their incisal ends closed. The slot and post hole together form what might be termed an "undercut slot".

The facing or tooth is preferably mounted on the lug 6 in the manner illustrated in Figure 8. That is, the tooth is positioned relative to the carding device in such a manner that the chamfered end 7 of the lug will first pass into the open end of the slot and post hole formed in the tooth as indicated in this figure. Then, it is merely necessary to force the tooth in the direction of the arrows of Figure 8 in order to force the lug 6 completely into the slot and post hole of the tooth, at which time the chamfered end 7 of the lug will be disposed at the closed end of the slot as indicated in Figure 1. The lug 6 is of slightly greater width than the slot 13. Consequently, in positioning the tooth on the lug, the inherently resilient lug must be compressed, as indicated in Figure 8. The tooth will be retained on the lug partly by the pressure exerted against the walls of the slot 13, which pressure is produced because of the inherent resilience of the lug which tends to cause it to expand to its original condition after having been compressed in order to position the tooth thereon. However, as shown in Figure 5, the portion of the lug 6 which is positioned within the post hole 14 will have a tendency to spread out to its original width after the tooth is positioned on the lug. Consequently, since the lug 6 is normally wider than the slot 13, this will form an enlarged portion 6a which will be disposed within the post hole 14 and will not readily pass through the narrower slot 13, unless the tooth is actually forced from the lug, so that

this enlarged portion also assists in retention of the tooth.

It is preferable to remove the tooth by sliding it downwardly in a direction opposite to that indicated by the arrows in Figure 8. However, regardless of whether or not care is used in removing the tooth from the lug, or regardless of which direction the tooth is pulled to remove it from the lug, there will be no danger of injury either to the tooth or to the lug. This is because the lug is inherently resilient, being preferably made of rubber. The tooth may be pulled outwardly from the card as indicated by the arrow in Figure 4, or moved longitudinally of itself as indicated in Figure 6, or may even be rotated from position. However, in no event will the tooth or the lug be injured. The same is true in positioning the tooth on the lug. Regardless of how it is forced on the lug, there will be no danger to the tooth or the lug. Since the lug is formed of inherently resilient material, it may be compressed during the mounting of a tooth thereon or removal of a tooth therefrom, but will always expand to its original condition. Thus, the lug will not get out of shape and will not fray or ravel or wear to any considerable extent even after a tooth has been removed and replaced an excessive number of times.

It will be noted from Figures 1, 3 and 6 that when a tooth is positioned on the lug it rests against the outer surface of the shelf 10. The outer surface of this shelf is disposed outwardly beyond the outermost point of the lower flange 2. Consequently, this flange will not interfere with removal and replacement of the tooth.

In Figure 7 I have illustrated a member for holding a number of the carding devices, for the keeping of stock, of the type illustrated in Figure 1. This member comprises a metallic plate 15 which is preferably made of aluminum and is adapted to be placed in a drawer for the keeping of the carding devices in orderly arrangement irrespective of the jarring incident to the opening and closing of the drawer. The plate is cut and struck upwardly at a number of places to form a plurality of spaced longitudinally extending flanges 16 and a plurality of stops 17. The flanges 16 are spaced apart a distance slightly greater than the width of the carding device. A stop 17 is disposed between each pair of adjacent flanges 16. One of the carding devices is adapted to be positioned between each pair of flanges 16, as indicated. When a carding device is positioned on member 15, as indicated in Figure 7, it will be in tilted position thereon due to the fact that the rubber bosses 5 on its back and adjacent one edge thereof will contact with the surface of the member 15. These rubber bosses raise the lower edge of the carding device to such an extent that if the teeth are slipped on the lugs in the proper manner as illustrated in Figure 8 and removed in the proper manner by slipping them in the opposite direction, there will be no interference by the flange 16. As shown, the edge of the carding device from which the teeth are preferably removed, will be disposed above the upper edge of the adjacent flange 16. The rubber bosses 5 serve another purpose. When the carding device of Figure 1 is removed from the drawer and placed on a table or counter, the bosses 5 will prevent skidding of the device if the dentist or tooth clerk attempts to remove or replace a tooth with one hand. In the handling of teeth and in their selection for dental cases, it is common practice to hold the model of the case in one hand while a tooth is being removed from the card for trial selection with the other hand. This non-skidding feature accomplished by the action of the bosses is a convenience and a time-saver to both the dentist and the tooth clerk.

In Figure 9, I have illustrated a different type of carding device adapted to be used for mounting a different type of tooth. This device is practically the same as that illustrated in Figure 1 with the exception that it is bent at an angle as at 18. However, it still comprises a back plate 1a, a rubber member 4a which carries the lug 6 and a front member or card 8a. It is provided with apertures 11a formed in the front member 8a for exposing portions of the member 4a upon which indicia may be written. The portion of the front member 8a through which lugs 6 project need not be raised in this instance as there will be no danger of interference with the flanges 2 in positioning the type of tooth shown on this device. In this instance, the end 7a of the lug 6 is chamfered to facilitate positioning of a tooth 12a thereon. This tooth is provided with an undercut slot and, as before, the lug 6 will cooperate with the slot in the identical manner previously described. The openings 3 in the back plate of Figure 2 and the cooperating rubber bosses 5 need not be provided in this instance.

In Figure 10, I have illustrated a device upon which a large number of teeth are adapted to be mounted, such as for the keeping of stock and for shipping purposes. This device comprises a back card member 1b and a front card member 8b, the front card 8b being struck outwardly at a plurality of vertically spaced intervals to form ledges or shelves 10a on the front surface thereof and corresponding grooves in the rear surface thereof. These grooves are adapted to receive strips or ribbons 4b which are made of rubber or other inherently resilient material. Each strip or ribbon 4b is provided with a plurality of lugs 6 integrally formed therewith and disposed at longitudinally spaced intervals. These lugs 6 are of inherently resilient material and are exactly the same as the lugs previously described. The front member 8b is provided with a row of slots 9b formed therein, in each ledge portion 10a. These slots 9b are spaced the same as the lugs 6 formed on member 4b. Each of the strips 4b is adapted to be positioned in the groove behind the ledge or shelf 10a and the lugs 6 are adapted to project through the slots 9b. The lugs 6 project through the front 8b a sufficient distance so that they may be used in mounting teeth on the device, in the manner previously described. The back member 1b will cover all the ribbons 4b and will keep them in position in the grooves formed in the back of the front member 8b. The front member 8b is provided with a pair of opertures 11b adjacent its upper end which expose portions of a card 19 disposed behind front member 8b. This card 19 is of such a type that symbols may be written or printed thereon.

In Figure 11 I have illustrated tooth-retaining lugs of slightly different form. These lugs 60, like the lugs 6, are formed of inherently resilient material such as rubber. They are exactly the same as the lugs 6 previously described with the exception that they are of different transverse cross-sectional outline. These lugs 60 are of dovetail or wedge-shape form in transverse cross-section. As indicated, the widest part of the lug is disposed outermost. One end

of the lug 60 is chamfered as at 70. The narrowest part of this lug 60 preferably will be slightly wider than the slot 13 in the tooth. This lug will function practically the same as the lug 6 with the exception that when a tooth is placed on this lug the wider outer edge on the lug will project into the post hole 14 and will aid in retaining the tooth on the lug, as indicated at 60a in Figure 11.

I have found that in making the tooth-retaining members, embodying the integral tooth-retaining lugs and the support from which they project, it is desirable to mix a suitable lubricating substance such as paraffin with the rubber mixture before it is poured into the molds. When this mixture hardens and forms the tooth-retaining member, the paraffin at the surfaces of the tooth-retaining lugs serves as a lubricant which facilitates slipping of the teeth on and off of the lugs. Of course, other suitable substances might be used. If such a lubricant is mixed with the rubber it is desirable to remove the lubricant from the exposed portions of the tooth-retaining member upon which it may be desirable to write with pencil.

In Figures 12, 13 and 14 I have illustrated a spring clip which is adapted to be employed with the member 15 of Figure 7 in order to normally retain the carding devices, of the type illustrated in Figure 1, thereon. This spring clip embodies a strip 20 which is preferably formed of resilient metal. This strip 20 is cut and struck upwardly at longitudinally spaced intervals to form a plurality of resilient tongues or lugs 21. Two of the members 20 are disposed behind each member 15 in order to retain thereon the two rows of carding devices disposed thereon. Each member 20 will rest against the rear surface of the member 15 and the tongues 21 formed thereon will project through the openings formed in the member 15 adjacent the flanges 16. As indicated in Fig. 14, the tongues 21 will frictionally engage the member 15 adjacent the flanges 16 and retain the carding device in position on member 15. The tongues 21 normally extend outwardly and upwardly adjacent the flange 16, as indicated at the top of Figure 14.

In positioning a carding device on the member 15 it is desirable to position it as indicated in Figure 14. One edge of the carding device will bear against one of the flanges 16 while the other edge will contact with one of the resilient tongues 21. In positioning the carding device between the flange 16 and the tongue 21 it is necessary to bend the tongue towards its adjacent flange 16. Thus, the carding device will be firmly held by the resilient tongue 21 between the tongue and the flange 16 at the opposite edge of the carding device. It will be apparent that this is a simple device for normally holding the carding devices in position on the member 15. The carding devices will not accidentally fall from the member 15 during removal or replacement from the drawer or even if the device 15 is turned upside-down. However, the spring clip is of such a structure that the carding devices may be readily removed from the member 15 when desired.

It will be apparent from the above description that I have provided a carding device for artificial teeth having many advantageous features. The teeth may be removed and replaced from the carding device without danger of injury to the teeth. Furthermore, because the lugs which are used for mounting the teeth are of inherently resilient material, regardless of whether or not care is used in applying the teeth and removing them, the lugs will not be injured in any way. Various other advantages have been mentioned or will appear from the appended claims.

Having thus described my invention, what I claim is:

1. A carding device for artificial teeth each of which has a slot formed therein comprising a body portion upon which the teeth are adapted to be mounted, means for mounting the teeth on said body portion, said means comprising a plurality of lugs of soft rubber which project from said body portion each of which is adapted to fit in a slot in a tooth and approximates said slot in width.

2. A carding device for artificial teeth each of which has a slot formed therein comprising a body portion upon which the teeth are adapted to be mounted, means for mounting the teeth on said body portion, said means comprising a plurality of lugs of soft rubber which project from said body portion, said lugs being of dovetail cross-section, each of said lugs being adapted to fit in a slot in a tooth and approximating said slot in width.

3. A carding device for artificial teeth each of which has a slot formed therein comprising a body portion upon which the teeth are adapted to be mounted, means for mounting the teeth on said body portion, said means comprising a plurality of lugs of soft rubber which project from said body portion, said lugs being of elongated form, one end of each of said lugs being chamfered, each of said lugs being adapted to fit in a slot in a tooth and approximating said slot in width.

4. A carding device for artificial teeth each of which has a slot formed therein comprising a member upon which the teeth are adapted to be mounted, means for mounting the teeth on said member, said means comprising a member formed of soft rubber and having a plurality of lugs of soft rubber projecting therefrom at intervals, said lugs projecting through corresponding slots formed in said first-named member, each of said lugs being adapted to fit in a slot in a tooth and approximating said slot in width.

5. A carding device for artificial teeth each of which has a slot formed therein comprising a back member and a face member secured together, means for securing the teeth in position on the face member, said means comprising a member formed of soft rubber which is disposed between said back member and said face member, said member having a plurality of lugs of soft rubber formed thereon at intervals which project through corresponding slots formed in said face member, each of said lugs being adapted to fit in a slot in a tooth and approximating said slot in width.

6. A carding device for artificial teeth comprising a back member formed of metal, said back member having flanges formed along the edges thereof, said back member having a plurality of openings formed therein adjacent one edge thereof, a tooth retaining member mounted on said back member between said flanges, said tooth retaining member embodying a main substantially flat portion which substantially covers said back member, said tooth retaining member being formed of rubber and having a plurality of bosses formed on its rear surface which project through the openings formed in said back member, said tooth retaining member having a plurality of lugs integrally formed on its front surface adjacent

the lower edge thereof, and a face member adapted to be mounted on said back member between said flanges and to substantially cover said tooth retaining member, said face member having a plurality of slots formed adjacent the lower edge thereof through which said lugs are adapted to project, said face member having apertures formed therein for exposing portions of said tooth retaining member upon which symbols may be written.

7. A carding device for artificial teeth comprising a back member, said back member having a plurality of openings formed therein, a tooth retaining member mounted on said back member, said tooth retaining member embodying a main substantially flat portion which substantially covers said back member, said tooth retaining member being formed of inherently resilient material and having a plurality of bosses formed on its rear surface which project through the openings formed in said back member, said tooth retaining member having a plurality of lugs integrally formed on its front surface, and a face member adapted to be mounted on said back member and to substantially cover said tooth retaining member, said face member having a plurality of slots formed therein through which said lugs are adapted to project, said face member having apertures formed therein for exposing portions of said tooth retaining member upon which symbols may be written.

8. A carding device for artificial teeth comprising a back member, said back member having a plurality of openings formed therein, a tooth retaining member mounted on said back member, said tooth retaining member being formed of inherently resilient material, said tooth retaining member having a plurality of bosses formed on its rear surface which project through the openings formed in said back member, said tooth retaining member having a plurality of lugs integrally formed on its front surface, and a face member adapted to be disposed over said tooth retaining member, said face member having a plurality of slots formed therein through which said lugs are adapted to project.

9. In combination, a carding device embodying a body portion having means for securing a plurality of teeth on the face of said body portion, said body portion having a plurality of rubber bosses projecting from the rear surface thereof, said bosses being disposed adjacent one edge thereof, and a member for holding said carding device, said member including a flat surface and a flange adapted to be disposed adjacent one edge of said carding device to limit movement thereof, said bosses resting against said flat surface and supporting the carding device in tilted position so that the edge adjacent said flange is substantially flush with or above the upper edge of said flange.

10. In combination, a carding device embodying a body portion having means for securing a plurality of teeth on the face of said body portion, said body portion having a plurality of rubber bosses projecting from the rear surface thereof, said bosses being disposed adjacent one edge thereof, and a member for holding said carding device, said member including a flat surface and a flange adapted to be disposed adjacent one edge of said carding device to limit movement thereof, said bosses resting against said flat surface and supporting the carding device in tilted position so that the edge adjacent said flange is substantially flush with or above the upper edge of said flange, and a spring clip for holding said carding device in position on said member.

11. A carding device for artificial teeth each of which has a slot formed therein comprising a back member, a tooth retaining member mounted on said back member, said tooth retaining member embodying a main portion which substantially covers said back member, said tooth retaining member being formed of soft rubber and having a plurality of lugs integrally formed on its front surface, and a face member adapted to be mounted on said back member and to substantially cover said tooth retaining member, said face member having a plurality of slots formed therein through which said lugs are adapted to project, each of said lugs being adapted to fit in a slot in a tooth and approximating said slot in width, said face member having apertures formed therein for exposing portions of said tooth retaining member upon which symbols may be written.

12. A carding device for artificial teeth each of which has a slot formed therein comprising a face member, said face member having a groove formed in the rear surface thereof and a corresponding ledge formed on the front surface thereof, a plurality of slots formed in said face member at the point where said ledge and groove are formed, and a ribbon of soft rubber having a plurality of lugs integrally formed thereon, said ribbon being disposed in the groove formed in the rear surface of said face member and said lugs projecting through said slots formed in said face member, each of said lugs being adapted to fit in a slot in a tooth and approximating said slot in width.

13. A carding device for artificial teeth comprising a body portion upon which teeth are adapted to be mounted, means for mounting the teeth on said body portion, said means comprising a plurality of lugs which project from said body portion, said lugs being formed of soft rubber containing a lubricant to facilitate application of teeth thereto and removal of teeth therefrom.

DAVID E. EVANS.