Jan. 4, 1938. I. J. NOVAK 2,104,052

APPARATUS FOR MAKING SATURATED, SIZED, FILLED, OR COATED PAPER OR FIBERBOARD

Filed July 19, 1933 3 Sheets-Sheet 1

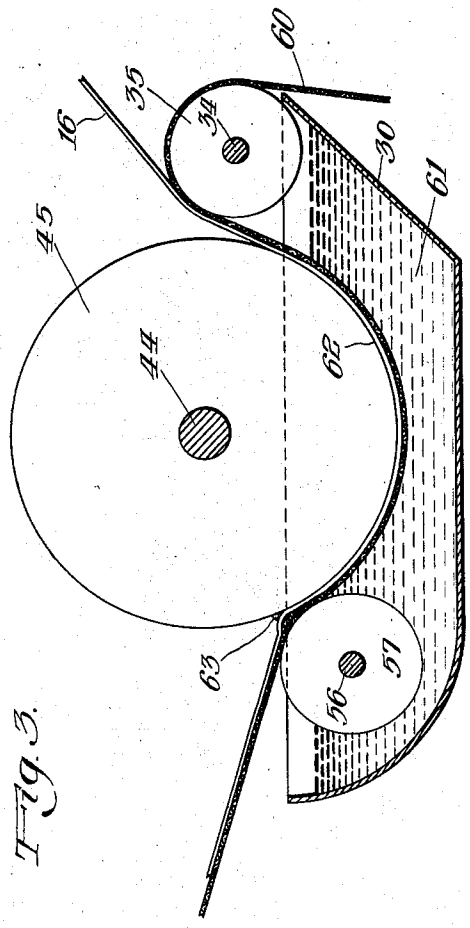

Fig. 3.

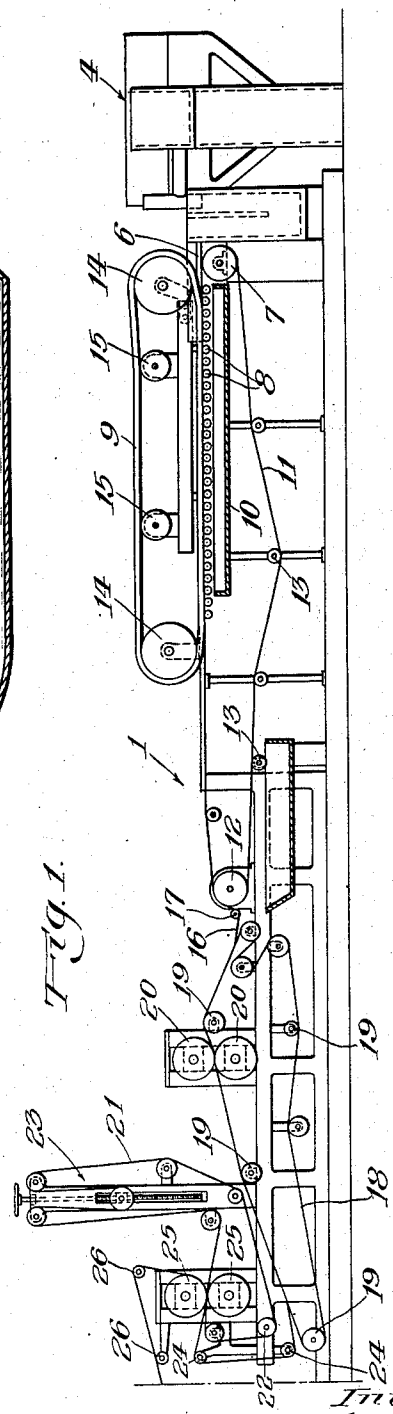

Fig. 1.

Inventor:
Izador J. Novak,
By Lee J. Fary
Attorney

Jan. 4, 1938. I. J. NOVAK 2,104,052

APPARATUS FOR MAKING SATURATED, SIZED, FILLED, OR COATED PAPER OR FIBERBOARD

Filed July 19, 1933 3 Sheets-Sheet 2

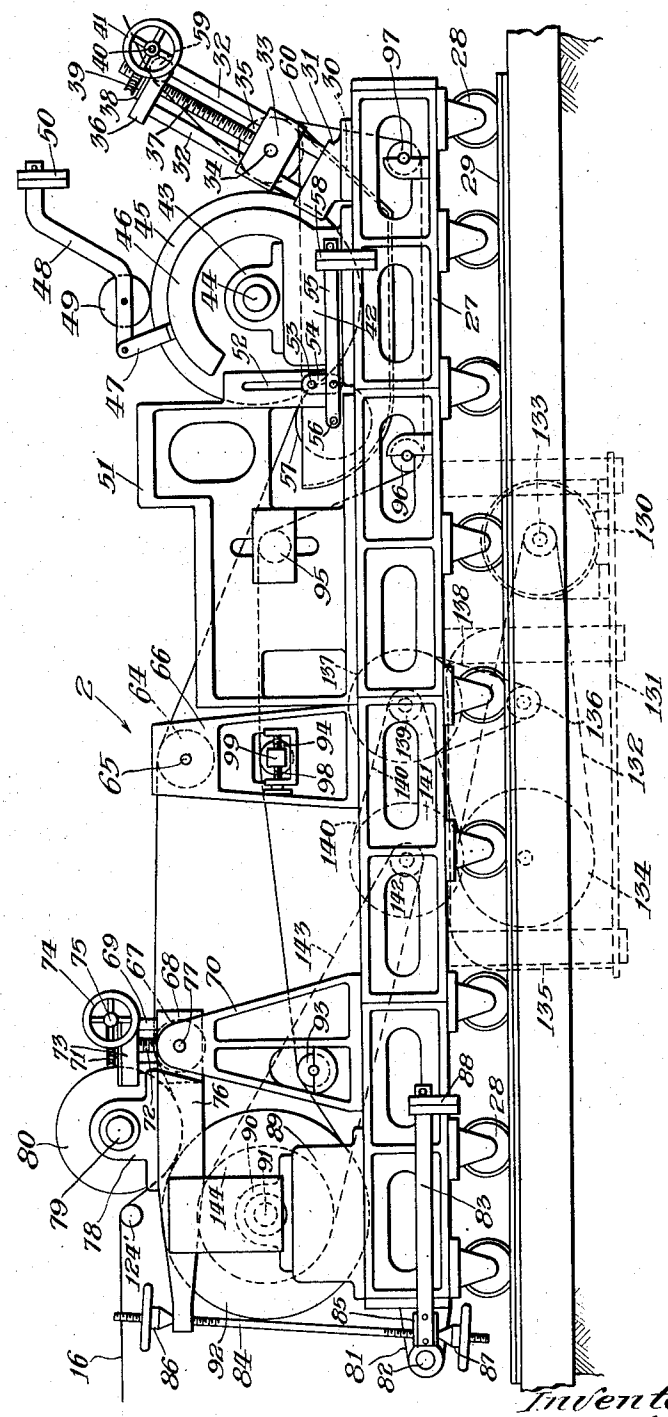

Fig. 1a

Inventor:
Izador J. Novak,
By Lee J. Gary
Attorney

Jan. 4, 1938. I. J. NOVAK 2,104,052

APPARATUS FOR MAKING SATURATED, SIZED, FILLED OR COATED PAPER OR FIBERBOARD

Filed July 19, 1933 3 Sheets-Sheet 3

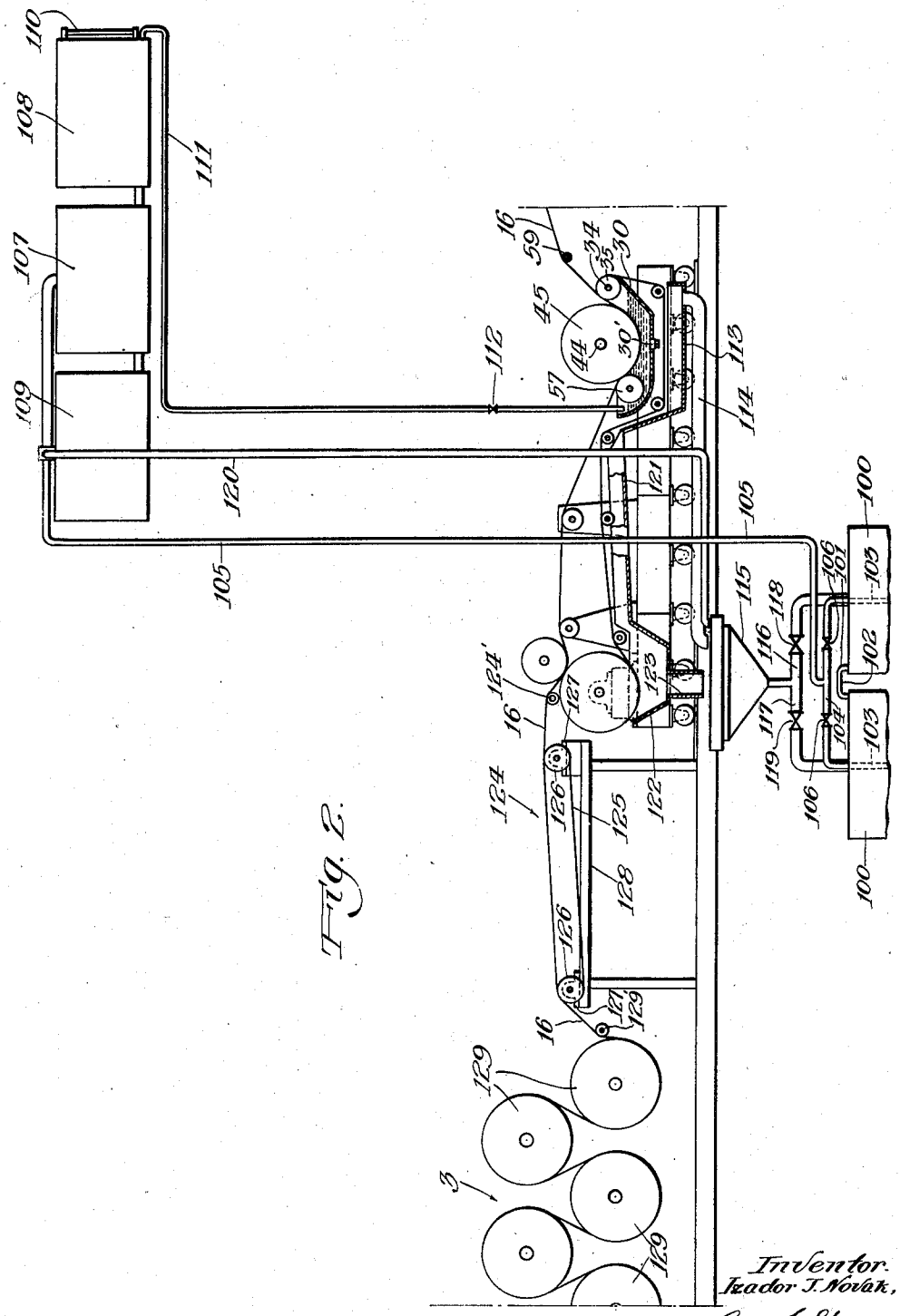

Fig. 2.

Inventor.
Isador J. Novak,
By Lee J. Hary
Attorney.

Patented Jan. 4, 1938 2,104,052

UNITED STATES PATENT OFFICE

2,104,052

APPARATUS FOR MAKING SATURATED, SIZED, FILLED, OR COATED PAPER OR FIBERBOARD

Izador J. Novak, Bridgeport, Conn., assignor to Raybestos-Manhattan, Inc., Bridgeport, Conn., a corporation of New Jersey

Application July 19, 1933, Serial No. 681,056

4 Claims. (Cl. 92—40)

This invention relates to improvements in apparatus for making saturated, sized, filled or coated fibrous material such as paper, fiber board or the like in one continuous operation, and in a specific embodiment, the invention refers to the combination of a paper making machine with means for saturating, sizing, filling or coating the newly formed continuous wet web as it leaves the paper machine, prior to drying of the web, whereby a portion of the water carried by the newly formed web is supplanted, to a predetermined degree, by the selected permeating medium.

The permeating portion of the apparatus is so designed that the fibers constituting the web are maintained in their original fiber formation as a web and are embraced by a predetermined quantity of permeating medium, the degree of permeation depending upon the permeability of the web, the rate of passage of the web through the permeating zone and the viscosity or fluidity of the permeating medium.

The saturating, sizing, filling or coating unit of the apparatus is essentially a device adapted to carry the wet fibrous web into contact with or within a body of liquid with which it is desired to permeate the wet web. As a feature of the invention, the wet web is supported by a porous carrier while traversing the permeating zone. The carrier may take the form of a flexible wire screen belt which passes beneath a hollow cylinder covered with wire screening, which cylinder moves at the same speed as the belt and which preferably dips below the surface of the liquid to a substantial depth. At the exit of the web from the surface of the liquid the carrier and web pass beneath a very soft roll and the wire screen roll whereby the web is slightly couched against the surface of the screen roll, which couching causes it to leave the screen roll cleanly and lie back on the porous carrier belt.

It is to be noted that couching at the point of breaking contact with the screen roll should be done in the presence of a large excess of the permeating liquid so that the web may distend in the presence of the excess liquid while unconfined and also in order that there may be sufficient liquid at the point of breaking contact with the screen roll so that there will be no tendency to adhere to the latter, which may occur if the web does not contain a large amount of liquid. Thus, large amounts of liquid increase the weight of the web and impart a tendency to the web to rest upon and adhere to the surface below, which is the porous carrier belt.

As the web carrying an excess of saturant passes on its way to the condensing roll it is free to distend in the presence of the permeating liquid and the fibers become thoroughly mixed and wetted therewith. The condensing roll against which the web is pressed must be resilient to provide a soft even contact and even pressure on the permeated web to avoid crushing and disturbing of the formation. It is to be noted that the permeating unit in the preferred embodiment operates with a wire, and resilient contact must, therefore, be provided in the construction of the roll or rolls in contact with the screen, the screen wire being comparatively non-resilient. The condensed web may be wound up on the upper couch or make-up roll in accordance with ordinary wet machine practice, or may be carried along as a single or multi-ply web through suitable drying apparatus.

A carrier belt consisting of woven screen wire has been selected for many reasons, among which are:

1. The permeability of screen to liquid in the permeating tank and free exit of air contained in the web through the screen and through the screen cylinder.

2. In the use of highly adhesive materials it is advisable to use a carrying belt of such construction that it is easily and completely cleanable.

3. A paper web containing high proportions of water may be pressed between screens without distortion of formation as against pressure between solid surfaces.

The permeating medium employed is kept within a closed system. The liquid expressed from the web at the exit of the web from the permeating vat flows back into the vat. Liquid expressed from the web at the condensing roll flows into a reservoir connected with the supply tanks and the machine is provided with pans leading to a reservoir below so that there is no loss of permeating medium. The permeating medium may be carried to supply tanks either by direct pumping or by air pressure, depending upon the nature of the permeating medium.

The utility, as well as other objects and advantages of my invention, will be brought out in the following description.

In the drawings, Fig. 1 is a diagrammatic side elevational view of a paper making machine of the Fourdrinier type.

Fig. 1*a* is a side elevational view of the saturating, sizing, filling or coating unit, comprising an embodiment of my invention.

Fig. 2 is a diagrammatic side elevational view

of the machine shown in Fig. 1a together with a portion of a conventional drum type drier.

Fig. 3 is a diagrammatic side sectional view of the saturating vat, screen and stripper couch.

Referring in detail to the drawings, 1 indicates the paper making section; 2 indicates the saturating, sizing, filling or coating section; and 3 indicates the drying section of my machine. The section 1, although showing an embodiment of a Fourdrinier paper making machine may take the form of any conventional paper making machine. The section 3, although shown as a drum type dried, may comprise any conventional type drier such as a loop drier, box drier or the like.

Referring particularly to Fig. 1, the usual fibrous pulp previously prepared in a conventional type beater (not shown) may be passed to a stuff chest and mix box (not shown). When the pulp has been diluted with water to bring the same to the desired consistency, it is passed to head box 4, and from the latter to apron board 6 of the paper making machine proper.

The machine 1 may be provided with the usual breast roll 7, table rolls 8, deckle straps 9 and pan 10. A screen 11 may pass around breast roll 7 and over table rolls 8 between the deckle straps 9, said screen at its outermost extremity of travel returning over roll 12, guide rolls 13 and back to breast roll 7. Deckle straps 9 may continuously travel around wheels 14 positioned in spaced relationship upon the machine. Guide rolls 15 may serve to support the deckle strap at the upper portion of its travel. The pulp discharged upon apron board 6 from the head box 4 may be passed to the upper surface of screen 11, the body of the pulp being confined by the opposite deckle straps 9. The screen in passing over table rolls 8 serves to permit the passage of a portion of the aqueous carrier of the pulp to pan 10, thereby causing a deposit of fibrous material upon the surface of the screen. In other words, the fibrous material is felted.

If desired, additional water may be removed from the web upon the wire by the use of suction boxes (not shown), which may be positioned beneath wire 11 between table rolls 8 and roll 12. When wire 11 returns over roll 12, the fibrous web 16 from which sufficient water has been removed to make the web selft-supporting, is stripped from the wire and passed beneath guide roll 17 adjacent roll 12. A blanket 18 may pass in a continuous manner over rolls 19, and web 16 upon being stripped from wire 11 may be carried upon blanket 18. At one portion of the passage of blanket 18 the same may be carried between press rolls 20.

Inasmuch as web 16 at this period of travel is carried upon blanket 18, additional water may be expressed from the web. It is to be understood, of course, that, depending upon the character of the final product, one or more press units may be utilized. Of course, the greater the number of press units, the less will be the water content of web 16 when the web is passed to section 2.

A second blanket 21 may pass in a continuous manner around guide rolls 22 and conventional belt tightener 23. At the extremity of travel of blanket 18, web 16 may be stripped therefrom, carried over guide rolls 24 and deposited upon blanket 21 as the same is passed between press rolls 25. Web 16 in passing between rolls 24 is relieved of an additional quantity of water. Web 16 after passage between rolls 25 is immediately stripped from blanket 21, trained over guide rolls 26 and passed to section 2.

Section 1 of my machine, as has been hereinbefore described may take the form of the usual Fourdrinier, cylinder, or any other type of paper making machine and, hence, has been shown more or less diagrammatically.

Referring particularly to Fig. 1a, 27 indicates a frame which may be mounted upon wheels 28, which in turn may be carried on tracks 29. A vat 30 may be mounted at one end of frame 27 and may be adapted to contain a quantity of the selected permeating medium in liquid form or in a liquid vehicle. Supports 31 may be positioned upon frame 27 on each side of vat 30 and may carry spaced angularly inclined guide rods 32.

Bearing blocks 33 may be slidably positioned upon each pair of guide rods 32 and may carry transversely disposed shaft 34 upon which roll 35 may be mounted. A brace 36 may be mounted at the upper ends of guide rods 32 and may transversely bridge the opposite pairs of rods. A screw 37 may be rigidly secured at one end to each of the blocks 33, the opposite ends of said screws being rotatably positioned in collars 38 carried by brace 36. A worm wheel 39 having internal threads, not shown, may threadedly engage each screw 37, said worm wheel being rotated by worm gears, not shown, mounted upon shaft 40, which latter, in turn may be rotated by hand wheel 41.

A pedestal 42 may be mounted upon frame 27 on each side of vat 30, each pedestal being adapted to support a pillow-block 43, in which opposite ends of shaft 44 are journalled. Roll 45 may be carried by shaft 44 between blocks 43, a portion of said roll extending within vat 30, and, as will be hereinafter more fully described, extending beneath the surface of the liquid contained within said vat.

A member 46 may be secured to pedestal 42 and may support arm 47 rigidly positioned upon said member. A lever 48 may be pivoted, at one end, upon arm 47 and may carry intermediate its length, cleaner roll 49, constructed of relatively soft felt and covered with cloth. A weight 50 may be adjustably mounted upon the free end of lever 48, the adjustment of the position of said weight varying the normal pressure of roll 49 upon roll 45. Roll 49 is adapted to remove loose pieces of fibrous material from roll 45 which adhere to said latter roll.

A super-structure 51 may be mounted upon frame 27 and may be provided with vertical slot 52. A pin 53 may be adjustably positioned within said slot and may carry link 54. The lower end of link 54 may be pivotally attached to an intermediate portion of lever 55 which, in turn, may carry shaft 56 at one end thereof. Shaft 56 may extend through a slot (not shown), provided in the walls of vat 30, said slot being packed to render the same as liquid-tight as possible. A stripper roll 57 may be mounted upon that portion of shaft 56 which extends within vat 30. A weight 58 may be adjustably positioned upon the free end of lever 55, the arrangement being such that the radial pressure of roll 57 against roll 45 may be varied by changing the position of weight 58 upon lever 55.

Web 16 after passing over guide rolls 26, is carried over roll 59 mounted upon bracket 36. A flexible wire screen belt 60 may be trained around roll 35 and is brought into contact with web 16 passing from roll 59. Supported by wire screen 60, web 16 may be passed into the liquid within vat 30, the web being confined between screen belt 60 and the screen periphery of roll

45. It can readily be seen that, by rotating hand wheel 41, shaft 34 may be raised or lowered with respect to bracket 36 and, hence, the tension of screen belt 60 may be increased or decreased. In order to eliminate tension in the web 16 during its passage from roll 59 to screen 60, roll 59 may be driven at a surface or peripheral speed substantially equal to the surface speed of said screen. In order to accomplish this result, a belt or like power connection, not shown, may be made between roll 59 and roll 35, which latter is driven by screen 60, as will be hereinafter more fully described. Web 16 when brought into contact with screen 60 may be wetted by the moisture or liquid carried upon said screen. Consequently, if roll 59 were not driven, said web would be subjected to tension, and in the presence of the additional liquid normally carried by the screen, would tend to stretch or disintegrate or otherwise have the original formation of fibers disturbed.

Web 16, after its initial formation in section 1, contains an appreciable quantity of water when leaving press rolls 25—25. The quantity of water in the web at this stage is dependent upon the final product desired, the type and degree of permeating medium and the type of fibers constituting web 16. However, in substantially all cases said web prior to its entry into vat 30 contains a relatively large quantity of water. It is characteristic of a fibrous web having a relatively high water content, when submerged, unsupported or improperly supported, in a liquid bath, to disintegrate in regard to its felted formation. Consequently, when the web is passed through vat 30, means comprising screen belt 60 is utilized to support the relatively weak web and prevent such disintegration.

Referring particularly to Fig. 3, the physical appearance of the web 16 is illustrated diagrammatically before, during and after its passage through the bath 61. Prior to entering bath 61, web 16 is of predetermined thickness and contains a predetermined proportion of water and fibrous material. When passed into bath 61, the web swells, as shown at 62 in Fig. 3, but being confined between the screen surface of roll 45 and screen belt 60, the web does not change its formation as such. The original relative arrangement of the fibers constituting the web does not change but the liquid content of the web is increased. The increase in liquid content of the web, of course, is taken from bath 61 which, as has been hereinbefore described, is a permeating medium in liquid solution or suspension.

When leaving bath 61, screen belt 60 and web 16 are passed between roll 45 and stripper couch roll 57, said latter roll exerting radial pressure against the former. Hence, a quantity of the liquid content of the web 16 is expressed and a quantity of the material 61 replaces some of the water originally in the web. In thus couching the web a pool of the permeating medium carried up from the bath in the meshes of the screen cylinder and falling back into the nip builds up above the nip of the contiguous rolls, as shown at 63 in Fig. 3. This pool is used to advantage in several respects. First, the pressure exerted by stripper couch roll 57 upon web 16 tends to compress said web. When the web leaves the osculating line of the rolls, it tends to expand, and thus expanding in the presence of pool 63 induces an additional quantity of material 61 into the web. Secondly, screen 60 and web 16 leave roll 45 at this point, and since a portion of pool 63 is above web 16 it assists, by virtue of its weight, in cleanly stripping web 16 from the screen surface of roll 45.

The mesh of screen 60, of course, depends upon the constituents of web 16 and the type of material 61. For certain types of material 61 a 40 mesh screen may be used. Wire screen is utilized since it is sufficiently porous to permit adequate contact of the material 61 and the web. The fineness of the porous carrier belt 60 and the degree of porosity of the surface of the saturating cylinder, in general, is varied in substantially the same degree as the carrier belt or screen on a Fourdrinier paper machine or the cylinder mould in a wet machine. For example, fine mesh screening is used for thin or free stocks; relatively thick or slow stocks require coarser screen with larger openings. If desired, the screen 60 may be supplanted by woven fabric for saturants which are stable and which may be easily washed out of the fabric. Unlike an imperforate surface which would tend to crush the fibers and disturb their relative formation, the screen tends to preserve the formation of fibers. Inasmuch as web 16 is passed in company with screen 60 between rolls 57 and 45, roll 57 may be constructed of relatively soft rubber so as not to unduly locally impress the web.

Screen 60, carrying web 16, after passing from vat 30 is carried over guide roll 64 mounted upon shaft 65 which, in turn, is journalled in the upper portion of standards 66. The screen and web are thence carried forwardly to the deflecting roll 67 mounted upon a shaft, (not shown), which is journalled in blocks 68. Blocks 68 may be slidably positioned upon guide rods 69 which may be mounted at their lower ends upon standards 70. The upper portions of said guide rods may be secured to member 71. Screws 72 may be rigidly secured to blocks 68 at their lower ends and may be rotatably positioned within members 71. A worm wheel 73 having internal threads (not shown) may threadedly engage each of the screws 72 and said wheel may be rotated to raise or lower roll 67 by means of hand wheel 74 mounted upon shaft 75 which, in turn, may carry worm gears (not shown) meshing with wheels 73.

A pair of arms 76 may be pivotally mounted upon shafts 77, one on each side of roll 67. A pillow-block 78 may be mounted upon each of said arms and may support shaft 79 which, in turn, carries condensing roll 80. Roll 80 is preferably constructed of relatively soft rubber or other resilient material, and is covered with cloth, felt or wire mesh screen to provide porosity behind the web so that the latter may strip cleanly therefrom. This porous covering is not used when the roll 80 is used as a make-up roll for plied sheets.

A pair of oppositely disposed hangers 81 may be mounted upon the rear end of frame 27, each of said hangers being adapted to carry a shaft 82 which, in turn, may pivotally support levers 83. Each of the arms 76 may be provided with apertures (not shown) at their free ends through which rods 84 may extend. The opposite ends of said rods may be positioned within apertures (not shown), provided in blocks 85 secured to levers 83. The opposite ends of each of said rods may be threaded, which threads may engage the internal threads of hand wheels 86 and 87 at the upper and lower ends of rods 84, respectively. The free ends of levers 83 may carry weights 88 which may be slidably adjustable along the length of said levers.

A pedestal 89 may be mounted upon each side of frame 27, each pedestal being adapted to carry pillow-block 90 which, in turn, support opposite ends of shaft 91. Couch roll 92 constructed of relatively soft rubber or other resilient material may be mounted upon shaft 91.

The arrangement is such that screen 60 carrying web 16 may pass over roll 67, which, as has been hereinbefore described, is vertically adjustable, and from roll 67 passes between the condensing roll 80 and the lower couch roll 92. It can readily be seen that shafts 79 and 91 are displaced horizontally from each other and that shaft 77 is also displaced horizontally with respect to shafts 79 and 91. Consequently, by raising or lowering roll 67, the couching effect of said roll upon the web passing from roll 67 to the surface of roll 80 may be increased or decreased. The radial pressure of roll 80 upon roll 92 can be varied by changing the position of weights 88 upon levers 83. In addition, the effectiveness of changing the position of weights 88 upon levers 83 may be changed within a predetermined degree by adjusting the effective length of rods 84. This latter adjustment, of course, can be made by properly manipulating hand wheels 86 and 87. It can readily be seen, therefore, that the apparatus including rolls 67, 80 and 92 is susceptible of extremely accurate adjustment whereby the pressing or couching effect of said rolls can be accurately controlled.

After passing between rolls 80 and 92, web 16 may be stripped from endless screen belt 60 and said screen belt carried to the forward end of the device over guide rolls 93, 94, 95, 96 and 97. Screen guide roll 94 may be adjustable by means of screws 98 which are threadedly associated with blocks 99 which, in turn, carry the shaft (not shown) upon which roll 94 is mounted.

Referring particularly to Fig. 2, 100 indicates a pair of tanks adapted to contain the selected permeating medium in aqueous solution or suspension. Said tanks may be connected at their upper portions by means of overflow pipe 101, controlled by valve 102. Pipes 103 may connect into each of the tanks 100 and may be connected to the discharge ends of pumps (not shown), contained within said tanks. Pipes 103 may be interconnected exteriorly of said tanks by means of pipe 104 which, in turn, may be connected to pipe 105. Between each of the tanks 100 and the point of connection of pipe 105 with pipe 104, valves 106 may be interposed whereby the permeating medium may be passed from either or both of tanks 100, or controlled portions of liquid may be passed from said tanks.

Pipe 105 may pass upwardly to overhead supply tank 107, said tank being connected at its lower portion to auxiliary tanks 108 and 109. Tank 108 may be provided with a conventional liquid level gauge 110 whereby the level of liquid within said tanks may be ascertained. Pipe 111 connected into the lower portion of tank 108 may constitute a discharge from the overhead system, the lower end of said pipe opening into vat 30. A valve 112 may be interposed in pipe 111 and may be adapted to control the passage of liquid from tank 108 to vat 30.

A pan 113 may be mounted upon frame 27 immediately beneath vat 30, said pan being adapted to catch the leakage of liquid from the vat. The lower portion of vat 30 is provided with a drain plug 30', whereby the liquid within vat 30 may be drained to pan 113. A drain pipe 114 may connect into the bottom of pan 113 and may discharge into basin 115. Basin 115 may be positioned immediately above tanks 100 and may be connected to both of said tanks by means of pipes 116 and 117. Valves 118 and 119 may be positioned in each of pipes 116 and 117, respectively, and may be adapted to control the return of liquid to either or both tanks 100.

An overflow pipe 120 may connect into pipe 105 adjacent the discharge of pipe 105 into tank 107. The lower end of pipe 120 may open into basin 115 whereby a local circulation of liquid may take place through pipes 105 and 120 in the event that material is not being discharged through pipe 111 at the same rate that it is being pumped into pipe 105.

A pan 121 may be positioned immediately beneath the path of travel of endless screen belt 60 and web 16 from vat 30 to roll 67. Said pan may be sloped in a direction toward pan 122 which may be positioned immediately beneath rolls 67, 80 and 92. It can readily be seen that any liquid which may drain from web 16 during its passage from vat 30 to and through couch rolls 80 and 92, will be caught by pans 121 and 122. A drain spout 123 may connect into the bottom of pan 122, said spout discharging into basin 115 which, in turn, permits the return of excess liquid to either or both of tanks 100.

Web 16, after being stripped from screen belt 60, is carried over guide roll 124' to conveyor 124 from whence it is transferred to drier section 3. Conveyor 124 comprises a continuous belt 125 which travels over rolls 126. Rolls 126 may be mounted upon pillow-blocks 127 which, in turn, may be supported on table 128.

Web 16 is transferred from conveyor 124 to guide roll 129' and into contact with the heated drier rolls 129.

As has been hereinbefore described, web 16 may be dried in any desired manner, and I do not wish to limit my invention either to the particular apparatus or manner in which the web is originally produced, or to a particular type of drying apparatus.

Various methods and apparatus have heretofore been proposed for continuously saturating, sizing or coating fibrous webs. For instance, in saturating, the saturating material has been associated with the pulp in the beater and the pulp felted upon a paper making machine, the theory being that in expressing the aqueous medium a quantity of the saturating material will be retained by the web. This is true within certain limits, but in order to make the pulp sufficiently free to be worked on the paper making machine, the saturating material is so diluted that little of such material remains in the web after expressing the aqueous vehicle. If the concentration of the saturating material in the pulp is high, the pulp will not be sufficiently free to felt into a durable, properly felted paper. In addition, this method is of necessity very wasteful of saturating material and large quantities must be used, very little of which ultimately appears in the finished web.

Heretofore in sizing, dry paper has been passed through a tub of sizing material. However, due to the inability of the dry fibers in ordinary paper to readily absorb the sizing material, little more than surface sizing ever actually takes place.

In utilizing my apparatus, the web is passed into the sizing bath in a wet state. Means are provided to permit the wet web to distend and absorb and be permeated with sizing material while

the web is maintained in its original fiber formation. In addition, upon leaving bath 61 and immediately after leaving rolls 45 and 57, the web is free to distend in the presence of an excess of material 61, the distention being free to take place until the web is carried onto rolls 67, 80 and 92. During this period the fibers constituting the web are thoroughly permeated.

In utilizing my device for coating and filling, the viscosity of the material 61, of course, is higher and consequently a lesser degree of distention takes place.

The drive for screen belt 60 may comprise a motor 130 or other prime mover, supported upon platform 131. A belt 132 may pass over motor pulley 133 and may drive pulley 134. A housing 135 may contain a conventional change speed mechanism, familiar to those skilled in the art, a driving pulley 136 extending exteriorly of said housing. Pulley 136, by means of belt 138, drives pulley 137. A pulley 139 of smaller diameter than pulley 137 may be mounted upon the same shaft as pulley 137. A belt 140 may connect pulley 139 to pulley 141 which, in turn, may drive pulley 142. A belt 143 may connect pulley 142 to pulley 144 mounted upon shaft 91 which latter also carries the lower couch roll 92.

It is to be understood, of course, that any conventional type drive is contemplated, such as a gear drive, sprocket chains, or the like. Consequently, I do not wish to be limited specifically to the type of drive described and shown.

The drives for section 1, and section 3 together with conveyor 124 are conventional and are considered to be familiar to those skilled in the art.

I claim as my invention:

1. The combination with a paper forming machine having means for felting aqueous fibrous pulp into the form of a continuous wet web, of a vat containing a bulk supply of selected permeating medium in liquid condition, a hollow roll having a foraminated surface rotatably positioned in said vat, means, separate from and independent of the web felting means, for passing said continuous wet web into contact with said permeating medium, comprising, an endless foraminated conveyor for confining the wet web between its surface and the foraminated surface of the roll to prevent disintegration of the web during its passage in contact with said permeating medium, means for condensing said web to remove excess liquid and means for removing said condensed web from the conveyor.

2. The combination with a paper forming machine having means for felting aqueous fibrous pulp into the form of a continuous wet web, of a vat containing a bulk supply of a selected permeating liquid, a hollow roll rotatably positioned in said vat having a foraminated peripheral surface, means separate from, and independent of, the web felting means for conveying said web through the bulk supply comprising an endless foraminated screen passing through said vat and adapted to confine said wet web in contact with said foraminated surface, means for driving said endless foraminated screen to rotate said roll and pass the web through the liquid in the vat, a couch roll diposed adjacent said vat in contiguous relation with said hollow roll, said endless screen and web being passed between said couch roll and said hollow roll as the screen and web emerge from contact with said permeating liquid, means for adjusting the radial pressure of the couch roll against the endless porous screen and web to press surface liquid from said web and strip said web from the foraminated surface, and means for condensing the web to remove remaining surplus liquid.

3. The combination with a paper forming machine having means for felting aqueous fibrous pulp into the form of a continuous wet web, of a vat for holding a bulk supply of a permeating liquid, a roll having a foraminated peripheral surface rotatably positioned in said vat, means separate from, and independent of, the web felting means for conveying said web through the bulk supply comprising a movable endless foraminated screen passing in contact with the liquid in said vat and adapted to support said continuous wet web in contact with said foraminated surface during passage of the web in contact with the liquid in the vat, a couch roll disposed adjacent said foraminated roll and having its axis parallel to the axis of said foraminated roll, said screen and web being passed between said couch roll and said foraminated roll when emerging from contact with the liquid in the vat, means for exerting the variable pressure of said couch roll toward said foraminated roll to couch said web and strip the same from the foraminated surface, said couch roll being horizontally offset with respect to said foraminated roll whereby a pool of said permeating liquid squeezed from said web is maintained adjacent the line of osculation of said rolls, means for condensing said web to remove surplus liquid and means for separating the condensed web from the endless screen.

4. The combination with a paper forming machine having means for felting aqueous fibrous pulp into the form of a continuous wet web, of a vat containing a bulk supply of selected permeating medium in liquid condition, a hollow roll having a foraminated surface rotatably positioned in said vat, means, separate from and independent of the web felting means, for passing said continuous wet web into contact with said permeating medium, comprising, an endless foraminated conveyor for confining the wet web between its surface and the foraminated surface of the roll to prevent disintegration of the web during its entire passage in contact with said permeating medium, a couch roll disposed in contiguous relation with the periphery of said hollow roll, said web and foraminated conveyor being passed between said couch roll and said hollow roll whereby said web is permitted to distend after passage between said rolls in the presence of a pool of permeating liquid which accumulates at the nip of said rolls.

IZADOR J. NOVAK.