Oct. 19, 1937. W. E. MORTRUDE, JR 2,096,128

ELECTROPHYSICAL CABINET

Filed April 18, 1936

Fig. 1.

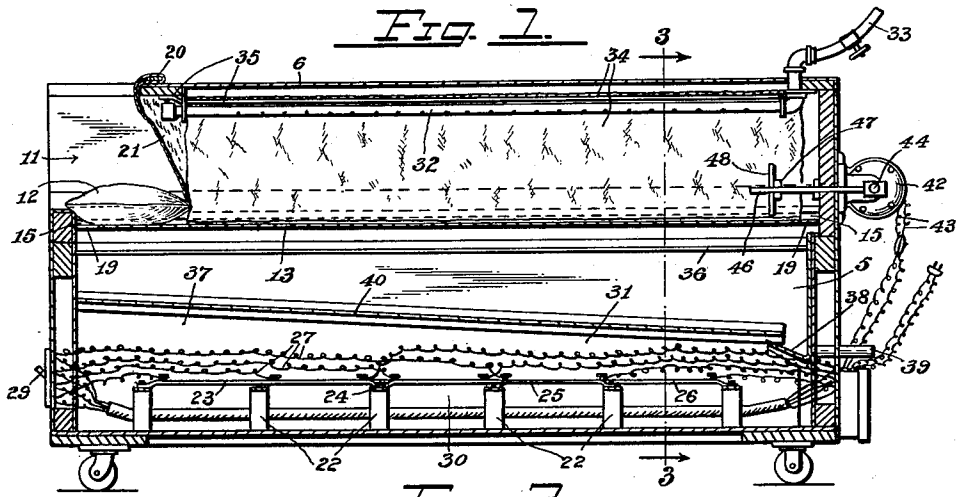

Fig. 2.

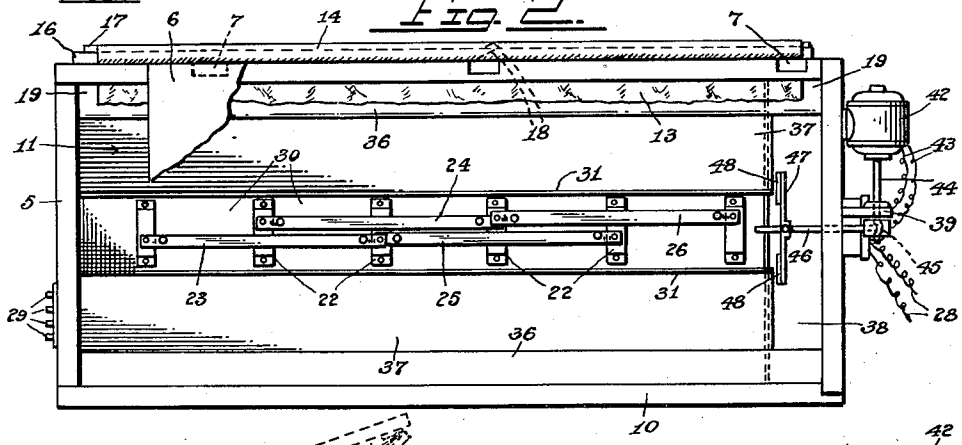

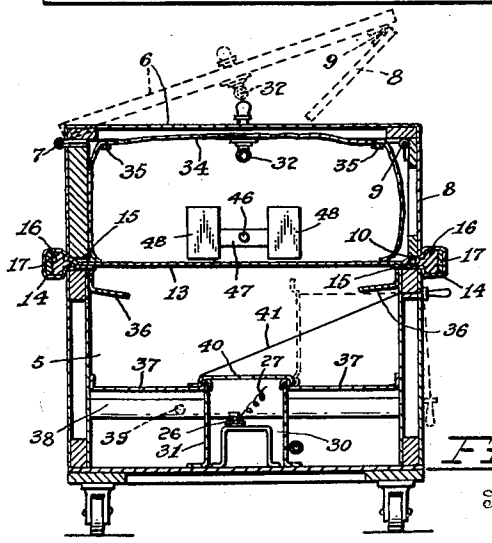

Fig. 3.

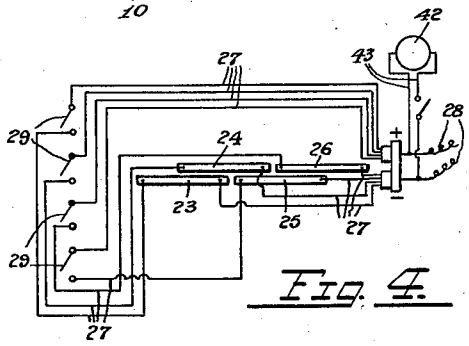

Fig. 4.

Inventor
William E. Mortrude, Jr.

By John W. Maupin
Attorney

Patented Oct. 19, 1937 2,096,128

UNITED STATES PATENT OFFICE

2,096,128

ELECTROPHYSICAL CABINET

William E. Mortrude, Jr., Seattle, Wash.

Application April 18, 1936, Serial No. 75,111

4 Claims. (Cl. 128—373)

My invention relates to electrophysical cabinets, and certain objects of the invention are to provide a simplified electrical cabinet for the treatment of physical disorders by means of perspiratory methods, and said cabinet having embodied therein a raisable lid or top and certain other novel features of construction and combination as hereinafter set forth.

Another object of the invention is to provide, in combination with the cabinet, an adjustable stretcher or bed member made of heavy fabric for supporting the patient's body while undergoing treatment, and which may be readily removed for cleansing and sterilizing.

Another object is to provide, in combination with the cabinet, a plurality of electrical heating elements mounted in the bottom of the cabinet in a centrally restricted longitudinal trough or chamber, and with each heating element having its individual circuit and switch whereby any desired amount of heat may be supplied and directed upwardly by radiation to different parts of the patient's body.

A further object is to provide shower bath means mounted in and supported by the raisable cabinet lid or top, and whereby warm water may be sprayed upon the patient's body for the purpose of washing off all poisonous waste that is excreted by the perspiratory means, and also to provide drapery means for preventing contact of water from the shower with the cabinet walls.

A further object is to provide complete drainage means for the shower whereby the water is carried off and prevented from contact with the heating elements.

And still further objects are to provide electric vibratory means for the feet of the patient, disposed at one end of the reclining stretcher, whereby the rapid oscillatory movement of the entire body is caused when the feet are held against the vibratory means and results in a thorough massage of that portion of the patient's body which rests upon the stretcher.

In the drawing:

Figure 1 is a view in central longitudinal vertical section of the cabinet;

Fig. 2 is a top plan view of the cabinet with the top or lid broken away;

Fig. 3 is a view in transverse vertical section taken substantially on a broken line 3—3 of Fig. 1; and

Fig. 4 is a wiring diagram.

Referring in detail to the drawing, wherein like reference numerals designate like parts in the several views, the numeral 5 indicates the main body portion of the rectangular cabinet, and the numeral 6 designates its lid or top. This lid has one of its side edges hinged to the top edge of one of the sides of the cabinet, as at 7, and a side flap 8, hinged at 9 to the other longitudinal edge of the lid, rests upon a lowered or cut away side of the cabinet at 10 when the lid is in the lowered or closed position, and a patient may readily step into the cabinet at the lowered or cut away side when the lid and its flap are raised as shown in dotted lines in Fig. 3. Portions of both the lid and its flap are cut away and also part of the head end of the cabinet thus leaving an open space 11 so that the patient may breathe fresh outside air when his head is resting upon a pillow 12 supported by the bed member or reclining stretcher which will now be described.

The bed member or reclining stretcher 13 is preferably made of a piece of heavy canvas having seamed loops 14 extending all along both of its longitudinal edge portions. These loops are passed through slots or openings 15 provided in each side of the cabinet 5, and sticks are then passed through the loops to retain the stretcher in place. Said sticks may consist of a larger stick 16 on each side having a rib or spline extending along its central portion thus making them T-shape in cross section and with the rib closing the slots 15 to prevent the escape of hot air from below the stretcher. Thin sticks 17 may then be jammed or wedged into the loops against the large sticks and the outward pull caused by the sticks draws the stretcher 13 tightly across the cabinet thus providing a firm support for the patient's body. These sticks may each be cut into two pieces, as shown by dotted lines at 18 in Fig. 2, so they may be more easily handled. Both the head and foot ends of the stretcher 13 terminate short of the ends of the cabinet in order to provide end spaces 19 for the circulation of hot air and water drainage. A bracket rod 20 extends transversely across the head end of the top 6 and one or more towels 21 may be caught around said rod and hang down to close this open head end portion of the cabinet and prevent excessive escape of hot air.

The heat is generated by a plurality of heating elements mounted upon bracket supports 22 that are secured to the bottom of the cabinet in central longitudinal relation. These heating elements are of the strip type with the usual resistance coils therein for causing long wave or infra-red radiation of heat, and I prefer to use four of same, namely a head element 23, a body element 24, a leg element 25, and a foot element

26. Each of said heating elements has its own separate circuit 27 with the respective terminals of each circuit collectively connected to the positive and negative sources of current supply 28, and each separate circuit has its own switch 29. The heating elements are confined by a narrow central longitudinal trough or chamber 30 comprising sheet metal side walls 31 whereby the heat from the elements is directed upwardly and along the body of the patient while he is reclining on the stretcher 13. Heat may be directed to any part of the patient's body by means of the wiring of each heating element. For example, if it is desired to heat the feet and head of the patient, the two outside switches 29 are closed thus directing current through the elements 23 and 26, it being understood that one or all the elements may be used or in any desired combination.

Another important feature of the invention resides in the shower bath means which is designed especially for the purpose of cleansing the patient's body from time to time of all poisonous waste matter excreted by perspiration while he is lying upon the stretcher 13 and undergoing treatment. Said means may comprise a perforated pipe 32 connected centrally and longitudinally to the top 6 of the cabinet and having a flexible pipe 33 leading thereto from any desired source of warm water supply. A cloth 34, such as waterproof duck, may be draped over the pipe 32 and over rods 35 mounted longitudinally within the corners of the top 6 with its side flaps extending down to the stretcher 13 for the purpose of shielding the cabinet walls from the water spray. When using the shower, some of the water percolates through the stretcher 13 and some of it drains off the ends of the stretcher and down through its end spaces 19.

A drainage system is provided for carrying off the water and for preventing its contact with the heating elements. Said drainage means may comprise slanting side drain strips 36 fixed to the sides of the cabinet slightly below the stretcher 13 for directing the water in its downward flow to the longitudinal central portion of the cabinet. The side walls 31 of the central trough 30 partly prevent contact of the water with the heating elements. Sheet metal plates 37, having inner longitudinal edges fixed to the top edges of said walls and their outer edges fixed to the sides of the cabinet 5, extend from the front or head end of the cabinet in a downwardly slanting direction to a drain trough 38 fixed to the rear or foot end of the cabinet, and a discharge pipe 39 conducts the water away from the cabinet. A cover plate 40, extending from the rear end of the cabinet to a communication with the trough 38, fits over the central chamber or trough 30 and prevents contact of the water with the heating elements. Some means, such as a cord 41 connected to this cover plate and extending through a wall of the cabinet, as shown in Fig. 3, may be provided for raising or removing the cover plate when the shower is not in use as will be understood.

The remaining important feature of the invention consists of a vibratory and massage means which is operated by a motor 42 mounted on the rear or foot end of the cabinet and electrically connected by wires 43 to the lead-in current supply wires 28. The shaft 44 of the motor is eccentrically connected in any desired manner, as shown in dotted lines at 45 in Fig. 2, to a rod 46 extending slidably and centrally through the foot end of the cabinet slightly above the reclining stretcher 13. A cross arm 47 is fixed to said rod and a plate 48 is fixed to each end of the cross arm. When the patient lies upon the canvas stretcher with his feet pressed against said plates and the motor 42 is started, his entire body is rapidly vibrated back and forth. His skin, however, resting upon the stretcher, will remain comparatively stationary thus causing an abrasive or rubbing action between the skin and body tissues and resulting in a thorough massage.

It will now be apparent that I have provided an electrophysical cabinet that is simple and inexpensive to manufacture, easy to operate, and which embodies a number of novel features adapted to increase its efficiency in the beneficial treatment of patients by perspirative means.

I claim:

1. An electrophysical cabinet comprising a cabinet body portion having sides and ends, a top hinged to one of the sides, and each side having a slot extending its length, a reclining stretcher comprising a piece of fabric with its side edge portions passing through the slots, means for retaining the stretcher in a stretched position consisting of wooden strips inserted into seams in its side edges and bearing against the sides of the cabinet body, and a heating system mounted within the cabinet below the stretcher.

2. An electrophysical cabinet comprising an elongated cabinet body having ends and a bottom fixed thereto, a top hinged to the body, a reclining stretcher bed member consisting of a piece of fabric disposed across the body, heating elements mounted centrally and longitudinally along the bottom of the cabinet, and side walls forming a central longitudinal trough chamber in the bottom of the cabinet for the heating elements and adapted to direct heat upwardly and centrally from said heating elements against the longitudinal center of the stretcher bed member.

3. An electrophysical cabinet comprising a casing, a bed member supported within the casing, a foot vibrator mounted in one end of the casing slightly above the bed member, said vibrator comprising a pair of foot pedals arranged to be engaged by the feet of a patient when reclining upon the bed, and a motor for operating the vibrator.

4. An electrophysical cabinet comprising a casing, a canvas bed member stretched across the casing and supported thereby, a central longitudinal through chamber in the bottom of the cabinet having a normally open top, a plurality of electric heating elements confined within said trough for directing heat upwardly, said heating elements comprising a head element, a body element, a leg element, and a foot element respectively distributed in longitudinal relation, and a separate circuit together with a separate switch for manually and independently controlling each heating element whereby heat is directed upward against the canvas bed member for the purpose of individually and collectively heating the different members and parts of a person's body while reclining on the bed member.

WILLIAM E. MORTRUDE, JR.