June 9, 1936. A. L. ARMENTROUT ET AL 2,043,225

METHOD AND APPARATUS FOR TESTING THE PRODUCTIVITY OF THE FORMATION IN WELLS

Filed July 5, 1935 3 Sheets-Sheet 1

Fig. 1.

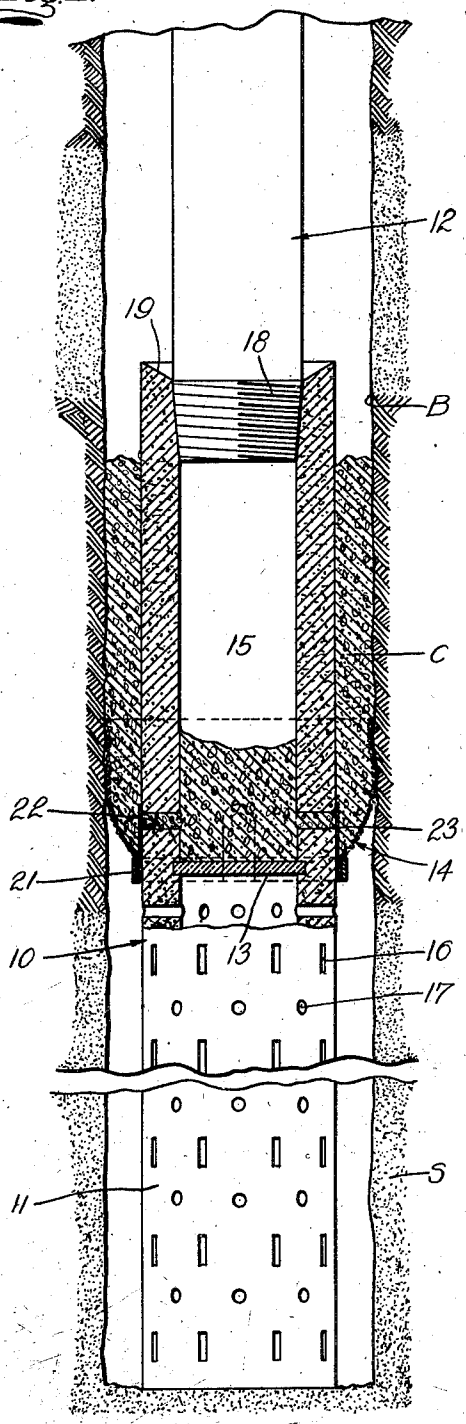

Fig. 2.

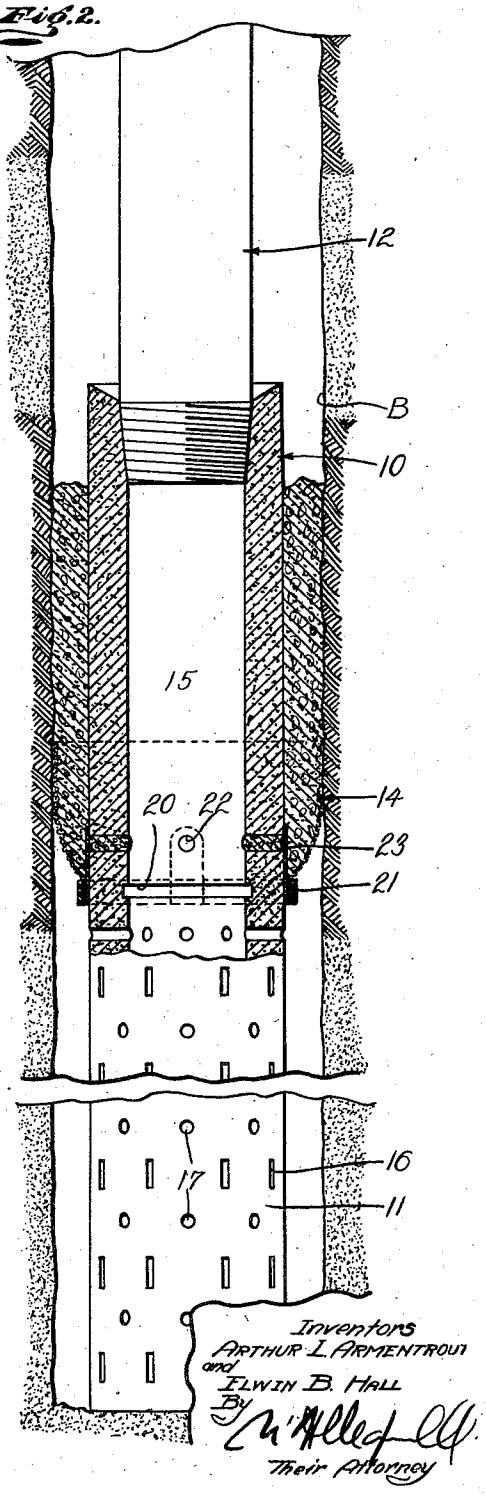

Inventors
ARTHUR L. ARMENTROUT
and
ELWIN B. HALL
By
Their Attorney

June 9, 1936. A. L. ARMENTROUT ET AL 2,043,225

METHOD AND APPARATUS FOR TESTING THE PRODUCTIVITY OF THE FORMATION IN WELLS

Filed July 5, 1935 3 Sheets-Sheet 2

Fig. 3.

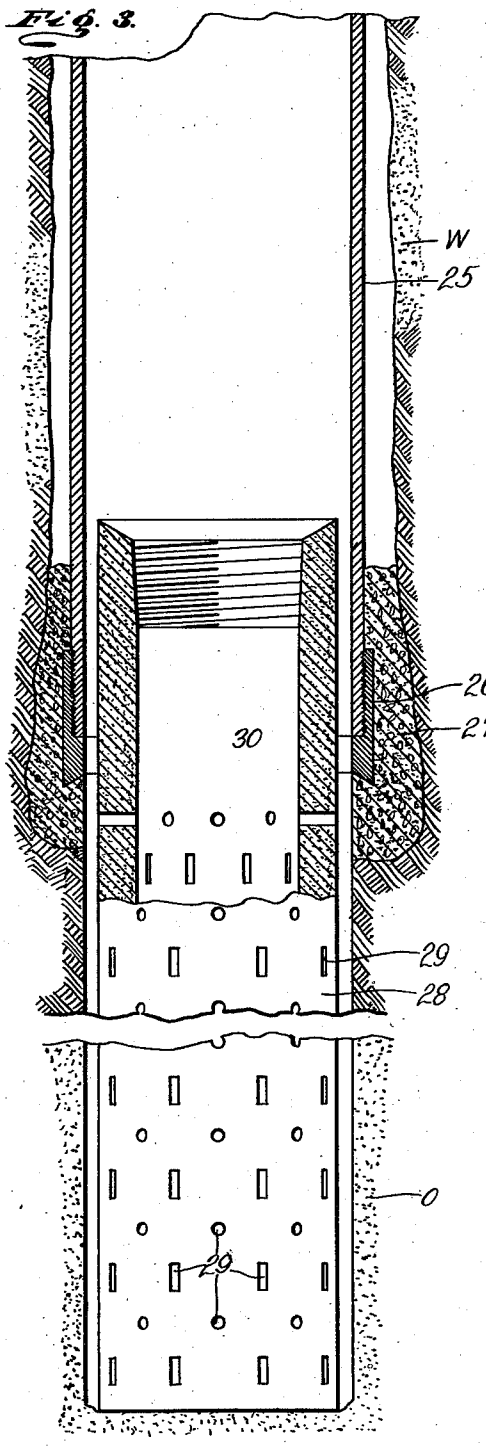

Fig. 4.

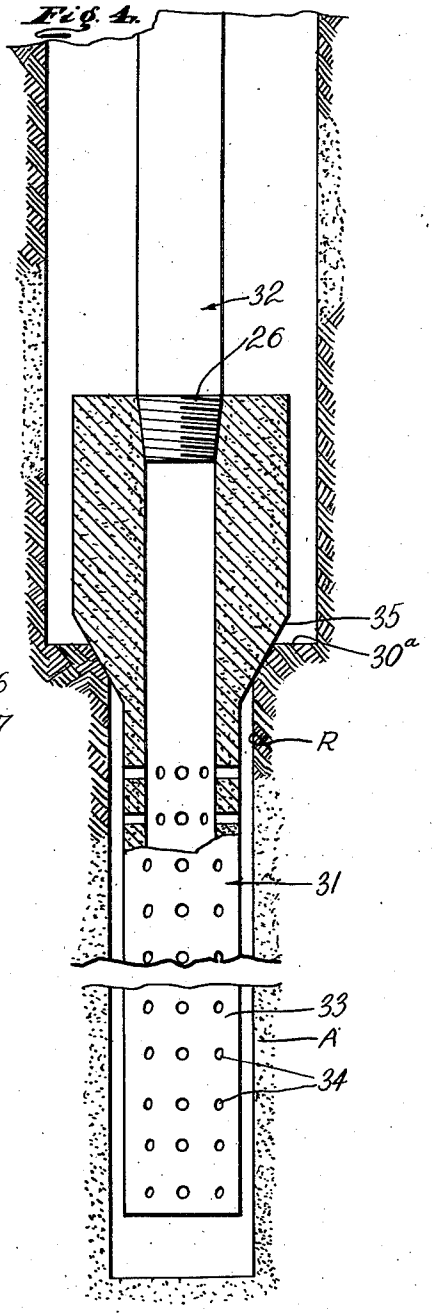

Inventors
ARTHUR L. ARMENTROUT
and
ELWIN B. HALL
By
Their Attorney

June 9, 1936. A. L. ARMENTROUT ET AL 2,043,225

METHOD AND APPARATUS FOR TESTING THE PRODUCTIVITY OF THE FORMATION IN WELLS

Filed July 5, 1935 3 Sheets-Sheet 3

Fig. 5.

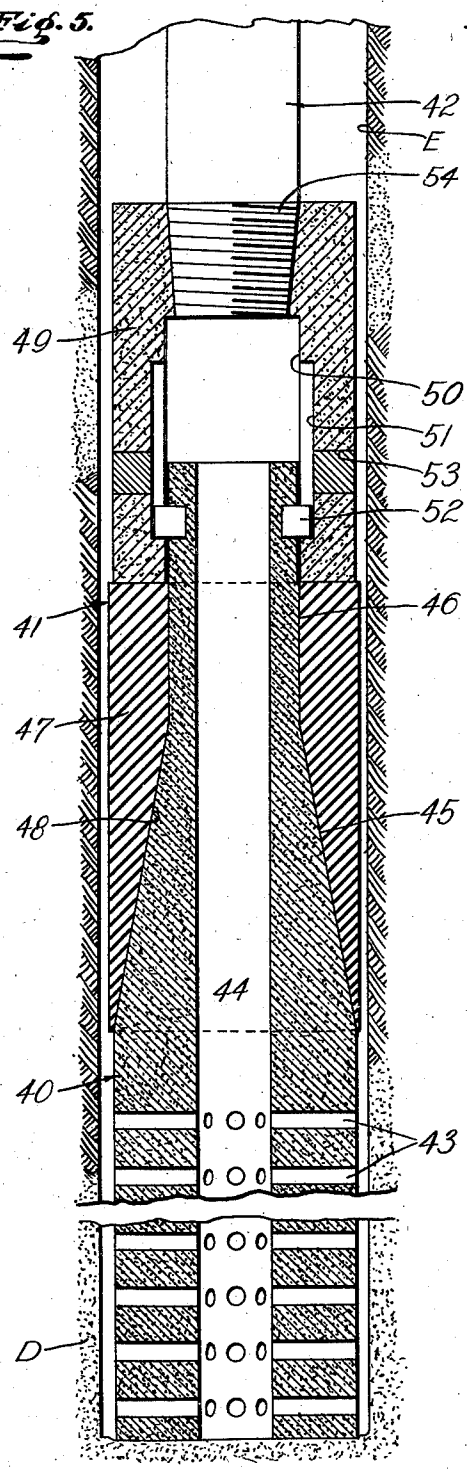

Fig 6.

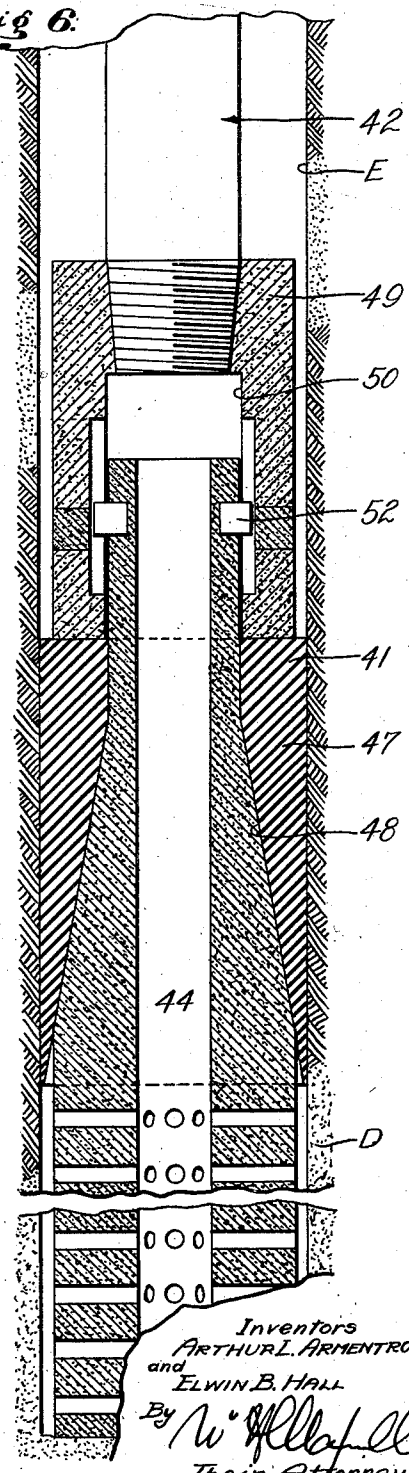

Inventors
ARTHUR L. ARMENTROUT
and
ELWIN B. HALL
By W. H. Albaugh
Their Attorney

Patented June 9, 1936

2,043,225

UNITED STATES PATENT OFFICE

2,043,225

METHOD AND APPARATUS FOR TESTING THE PRODUCTIVITY OF THE FORMATION IN WELLS

Arthur L. Armentrout, Bakersfield, and
Elwin B. Hall, Los Angeles, Calif.

Application July 5, 1935, Serial No. 29,988

19 Claims. (Cl. 166—1)

This invention relates to a method and apparatus useful in connection with the drilling and producing of wells and relates more particularly to a method and apparatus for testing the productivity of the earth formations encountered in the drilling of oil and gas wells. A general object of this invention is to provide a rapid, dependable method for accurately determining the productivity of the formation encountered in a well and to provide a simple, practical and inexpensive apparatus for carrying out said method.

In the drilling of oil wells and gas wells it is highly important to determine the productivity of the earth formations encountered as the drilling progresses. In the rotary method of well drilling, rotary mud or circulation fluid is pumped through the drilling string into the well. Formerly, the drillers observed the circulation fluid discharging from the well during drilling for traces of oil and gas and when such traces were present and indicated favorable producing conditions the drilling string was withdrawn from the well and a screen pipe or liner was cemented in the well to allow the oil or gas bearing sands to produce through an oil tube or producing tube. In a great many instances the sands or formation thus located did not produce in paying volume which would necessitate the removal of the cemented-in liner before the drilling could be resumed. In recent years it has been the usual practice to employ core drills to obtain samples or cores of the earth formation from time to time as the drilling of the well progresses. When the cores obtained indicate the presence of a productive sand it is usual to employ what is known as a well tester to determine more accurately the productivity of the formation before cementing in the liner or before continuing the drilling. The well testers just mentioned are often very expensive of manufacture and operation. Further, much difficulty, expense and delay has attended the use of well testers because they very often become caught or stuck fast in the well due to their operation by a weight or go-devil dropped into the well to actuate their valves, packers, etc. and due to other conditions. As the well testers that are in general use are fabricated of steel or other metal they must be fished from the well at great expense when they are thus caught and and in instances where they cannot be fished out the well must be abandoned or side-tracked past the lost tester.

Another object of the present invention is to provide a commercially practical method for testing the productivity of the formation in a well that does not endanger or imperil the well or cause excessive delay as it cannot under any conditions necessitate a fishing operation.

Another object of this invention is to provide a simple, effective method for testing the productivity of a selected zone or stratum in a well to accurately determine the character and quantity of the fluid produced by the selected zone or stratum.

Another object of this invention is to provide a method for testing the productivity of the formation in a well bore that does not necessitate the lowering of complicated testing devices into the well or the setting of metal tools in the well that are liable to become immovably fixed or stuck.

Another object of the invention is to provide a method for determining the productivity of the formation in a well that requires a minimum number of simple operations.

Another object of the invention is to provide an apparatus or device for testing the productivity of the formation in a well that does not in any instance require removal from the well following the completion of the test and, therefore, never necessitates a fishing operation.

Another object of this invention is to provide an apparatus or tester for testing the productivity of the formation in a well that is formed entirely of parts and material that may be readily broken up or drilled up following the completion of the test to permit the drilling of the well to progress or to permit the setting of an oil string and its liner as the particular case may require. The apparatus or tester of the present invention may be fabricated of inexpensive friable material so that it may be easily broken up by drilling tools following the completion of the test and the material of which it is formed carried from the well by the usual circulation fluid.

Another object of the invention is to provide an apparatus or tester for testing the formation in a well that is operable to obtain a normal, uncontaminated and fully representative test of the fluids produced from the selected stratum in the well.

Another object of this invention is to provide an apparatus or well tester of the character mentioned that embodies an effective packing means for excluding the liquid and the hydrostatic pressures of the liquid in the well from the sands or formation being tested.

The various other objects and features of the invention will be fully understood from the following detailed description of typical manners

of carrying out the method and typical forms of the invention, throughout which description reference is had to the accompanying drawings, in which:

Fig. 1 is a partial side elevation and partial vertical sectional view of one embodiment of the invention in position in a well, illustrating the manner in which the cement is conducted to the cement basket. Fig. 2 is a view similar to Fig. 1 showing the frangible sealing disc removed or broken away to permit the fluids from the formation being tested to flow into the test string. Fig. 3 is a fragmentary vertical sectional view of the lower portion of a well having a casing cemented therein illustrating another embodiment of the invention with a portion broken away to appear in vertical cross section and illustrating another manner of carrying out the method. Fig. 4 is a vertical sectional view of the lower portion of a well having a pilot bore or rat hole illustrating another form of the invention arranged in position to make a test in accordance with another manner of carrying out the method with a portion broken away to appear in vertical cross section. Fig. 5 is a vertical detailed sectional view of still another embodiment of the apparatus positioned in the well with its packer in the unactuated condition and Fig. 6 is a view similar to Fig. 5 showing the packer actuated.

The present invention is adapted to be embodied in various forms and in forms for use in various situations. In the following detailed disclosure we will describe several typical embodiments of the invention and will follow such disclosures with descriptions of the method as carried out in the operation of these particular embodiments of the apparatus. It is to be understood that the invention is not to be construed as limited or restricted to the specific details set forth but that it is to be taken as including any features or modifications that may fall within the scope of the claims.

The form or embodiment of the apparatus illustrated in Figs. 1 and 2 of the drawings includes, generally, a friable or frangible body 10 having a perforate lower portion 11, a string of pipe or tubing 12 releasably connected with the body 10, a frangible closure disc 13 initially sealing off the interior of the perforate lower portion 11 of the body from the upper portion of the body, and a cement basket 14 on the body 10 for receiving cement to seal off the liquid in the well B from the formation being tested.

The body 10 is an elongate member and is tubular or preferably tubular throughout the major portion of its length. The body 10 is adapted to be run into the well bore B on the string 12 to a position where its perforate lower portion 11 is in the zone of or is within the stratum S to be tested. In the particular case illustrated in the drawings, the stratum S being tested is at the lowermost portion of the well and the body 10 is positioned so that its lower end rests on the bottom wall of the well bore B. The body 10 is proportioned to fit the well bore B with substantial clearance as illustrated and in the particular embodiment of the invention being described the body is of uniform diameter.

It is a very important feature of the present invention that the body 10 is frangible or friable so that it may be readily crushed or broken up by drilling tools or the like. It is to be understood that the body 10 is sufficiently strong to be lowered to its proper position in the well without fracturing or failing and is adapted to withstand the flow and pressure conditions in the well. The invention contemplates the constructing or forming of the body 10 of cement or other cementitious materials or combinations of the same, bakelite, glass, hard rubber compositions or any other material that may be easily broken up or crushed by drilling tools or other tools run into the well for that purpose.

The body 10 is preferably integral, it being understood, of course, that it may be made up of a plurality of sections if desired or necessary. The perforated lower portion 11 of the body 10 operates as a liner or screen during the test admitting the fluids from the stratum S to the longitudinal opening 15 of the body. In the particular case illustrated in the drawings, the portion 11 is provided with a multiplicity of vertically spaced and circumferentially spaced slots 16 and substantially cylindrical openings 17 which extend outwardly from the opening 15 to the periphery of the body. The length of the perforated portion 11 of the body depends upon the vertical extent of the exposed stratum S being tested, it being understood that the portion 11 may be of any desired length.

The string 12 of pipe or tubing is provided primarily to lower or carry the body 10 to the desired position in the well bore B and to conduct the sample or test fluid to the surface of the well. The string 12 performs other functions as will be hereinafter described. The test string 12 is made up of a plurality of lengths of casing, pipe or tubing in the usual manner. In accordance with the invention the string 12 is releasably connected with the body 10 to be easily detached therefrom following the completion of the test. The invention contemplates the connection of the string 12 with the body 10 by a releasable coupling, a safety joint or other readily releasable device. In the particular case illustrated in the drawings the lower end portion of the string 12 is releasably connected with the body 10 by left hand threads 18. The lower end part of the string 12 is preferably threaded into the upper end portion of the tubular body 10. The left hand threads 18 may be easily unthreaded or disconnected without loosening the right hand threaded joints of the string 12. The upper end 19 of the body 10 is preferably inclined downwardly and inwardly.

The frangible closure disc 13 extends across and closes off the opening 15 of the body above the slots 16 and perforations 17. The disc 13 is provided to exclude the cement from the perforated body portion 11 when the cement is introduced into the basket 14. The disc 13 also acts to exclude liquid in the well from the upper portion of the body 10 and the string 12 when the string is run into the well so that the string may be floated into the well with the interior of the string 12 and the upper portion of the body opening 15 dry or substantially dry. The disc 13 is frangible so that it may be readily broken out by a tool or tools run in through the string 12 and may be formed of cast metal, cementitious material, ceramic material, glass, bakelite or any other impervious material that is readily fractured and broken. The peripheral edge portions of the disc 13 are received in an annular groove or recess 20 in the wall of the opening 15 and may be molded or cast directly in the body.

The basket 14 is attached to and surrounds the body 10 above the multiplicity of slots 16 and openings 17 and is adapted to receive cement C which is introduced into the well bore B above

the basket to seal off the lower stratum S from the remainder of the well. The basket 14 may be formed of rubber, canvas or other similar material and faces upwardly; that is, its lower end is secured to the body 10 by a band 21 while its upper end is open to the well bore. The basket 14 is adapted to expand and bear outwardly against the wall of the bore B when it receives the cement C. Openings or ports 22 are provided in the wall of the body 10 above the disc 13 to conduct the cement C from the body opening 15 to the interior of the basket 14. Check valves 23, while not essential, may be provided at the ports 22. The valves 23 illustrated in the drawings consist of flexible arms or straps whose lower ends are secured under the band 21. The straps constituting the valves 23 extend upwardly from under the band 21 to normally cover and close the ports 22. When the body 10 is run into the well on the string 12 the valves 23 are held in their closed position by the hydrostatic pressures in the well and exclude the liquids in the well from the upper portion of the body opening 15. The valves 23 in being flexible, flex outwardly to their open positions when the cement C is passed or forced outwardly through the ports 22. The strap 21 and the valves 23 may be formed of any suitable material and if found necessary or desirable may be formed of metal as they are so small that they do not interfere with the drilling up of the tester following the completion of the test.

The method of the present invention as practiced with the apparatus illustrated in Figs. 1 and 2 is as follows: Assuming that it has been learned that the stratum S is an oil bearing sand and assuming that the drilling tools have been removed from the well, the body 10 is attached to the lower end of the test string 12 by the threads 18 and is run into the well on the string. The tester body 10 may be run to a position where its lower end rests on the bottom of the well bore. If desired or found practical, the test string 12 may be run into the well dry, the disc 13 and the valves 23 operating to exclude the well liquid from the string. It is to be understood that the test string 12 may be run into the well wet or open to the well bore. Following the positioning of the body 10 in the well, cement is passed or delivered to the upper portion of the body opening 15 and the basket 14. The quantity of cement required to fill the basket 14 and surround the upper portion of the body 10 for a sufficient distance to dependably exclude the well liquid from the stratum S may be readily determined in the well known manner. The cement C may be carried, forced or delivered to the body opening 15 and the basket 14 in any of the well known manners; for example, it may be delivered to the basket by the Perkins method or may be lowered through the string 12 in a drop bottom bailer to the disc 13 and then put under pressure to flow through the ports 12 into the well bore B above the basket 14. It is preferred to employ a quick setting cement so that the body of cement C in the basket and surrounding the body 10 may set in a short time. After the cement C has set the small amount of cement remaining in the string 12 may be drilled out by standard or rotary tools. In the event that there is liquid in the test string following the cementing operation, this liquid may be removed in a suitable manner, as by bailing or pumping. If desired, however, the liquid may be allowed to remain in the test string 12.

Following the cementing operation the method provides for the breaking of the frangible disc 13. The disc 13 may be readily broken by cable tools run through the string 12 on a line. Following the breaking of the disc 13 the fluids in the stratum S may flow through the slots 16 and openings 17 to pass into the body opening 15 and the string 12. If liquid remains in the string 12 as set forth above the fluids freed from the stratum S will displace the liquid from the string, it being apparent that it is preferred to remove the liquid from the string so that the stratum S may produce under substantially normal pressures and so that the test fluid is uncontaminated. In the event that the stratum S does not produce in sufficient volume or at a sufficient pressure to flow out through the string 12 the test fluids produced into the body 10 and the string 12 may be bailed out, pumped out or removed in any desired manner. Thus, the character of the fluids produced from the stratum S and the rate of production of these fluids is readily determined. The body of cement C surrounding the upper portion of the tester body 10 excludes the liquid in the well from the stratum S and thus excludes the heavy hydrostatic pressures from the stratum S, allowing the stratum to produce under normal pressures.

If the test discloses that the stratum S produces the desired fluid in a paying volume, the string 12 and the body 10 may be allowed to remain as shown in Figs. 1 and 2 so that the well may produce through the string. It is usually preferred, however, to employ a more permanent and effective screen pipe or liner for the production of the well. When it is desired to set a regular or permanent liner the string 12 is first detached from the body 10. This is easily accomplished by rotating the string 12 in a direction to unthread or release the threads 18. The string 12 may then be pulled from the well. Following the removal of the string 12 from the well, the body 10 of the tester and the cement C are crushed and drilled up by suitable tools such as typical drilling tools. The body 10 being formed of frangible or friable material is easily drilled up in this manner. The material of which the body 10 and its associated parts are formed may be washed or carried from the well by the circulation fluid leaving the well free for the setting of the liner and oil tubing.

When the test carried out as described above, discloses that the stratum S does not produce the desired fluid in paying quantities the string 12 is detached from the body 10 and pulled from the well. The body 10 and the cement C are then drilled up by suitable drilling tools and the material of which they are formed washed or flushed away. The drilling tool employed to drill up the tester may be employed to continue the drilling of the well to a greater depth. It will be noted that the method for testing the formation as just described is adapted to accurately determine the productivity of the formation and following the completion of the test and the drilling up of the tester the drilling operation may be continued without the necessity of removing or fishing the tester from the well. The tester in being formed of parts and material readily drilled up by typical drilling tools can never necessitate an expensive fishing operation and its positioning and operation in the well do not require the repeated assembling, running in and pulling out of a string of pipe.

Fig. 3 of the drawings illustrates another form

of apparatus and another manner of carrying out the method of the present invention. As shown in Fig. 3 a water bearing sand or stratum W is located above an oil or gas bearing stratum O at the bottom of the well bore. In accordance with the manner of carrying out the invention disclosed in Fig. 3, a casing 25 is run into the well and its lower end or shoe 26 is cemented in the well below the water bearing stratum W by a body of cement 27. This cementing operation may be performed by any of the well known cementing methods. The cement 27 and the casing 25 exclude all water from the well and allow the casing 25 and the open lower portion of the well bore to be bailed free of liquid. A liner or tester body 28 is run into the well on a string of pipe, tubing or casing, not shown, to a position where it rests on the bottom of the well bore. The body 28 is preferably run into the well and positioned before the liquid is bailed or removed from the well.

The body 28 may be substantially identical with the above-described body 10 being friable or frangible and formed of cement, bakelite, glass, or the like. The lower portion of the body 28 is perforate, being provided with spaced perforations 29 for admitting fluids from the lower open portion of the well bore to the longitudinal body opening 30. The upper portion of the body is imperforate and the body 28 is proportioned so that its upper portion extends into the lower end of the casing 25. The body 28 is adapted to fit the casing 28 and the open lower portion of the well bore with suitable clearance. Following the bailing or removal of the liquid from the casing 25 and the lower portion of the well bore the fluids in the stratum O may freely flow from the stratum into the body opening 30 and pass upwardly from the body into the casing 25. The body 28 acts as a liner to prevent caving and excessive sanding up of the lower open portion of the well bore. The test fluid which flows into the body opening 30 and the casing 25 may be removed from the well by pumping or bailing or may be permitted to flow out through the casing if it is produced under sufficient pressure. In this manner the stratum O is tested for its productivity. Following the completion of the test, drilling tools are run into the well through the casing 25 and are operated to drill up the body 28 and the drilling operation may be continued with the same tools to deepen the well bore.

Fig. 4 of the drawing illustrates the invention employed in testing the formation in a well bore having a pilot bore or rat hole R. The rat hole R extends into an oil or gas bearing stratum A and terminates at its upper end in an upwardly facing annular shoulder 30a. The apparatus of the invention employed for testing the stratum A comprises a frangible or friable body 31 and a test string 32.

The tester body 31 is an elongate tubular member formed of cement, bakelite, glass rubber composition, or other material that may be readily crushed and drilled up by well drilling tools. The major lower portion 33 of the body 31 is adapted to extend into the rat hole R with suitable clearance and is provided with a multiplicity of vertically and circumferentially spaced perforations 34. In accordance with this form of the invention the upper portion of the body 31 is thickened and provided with a downwardly and inwardly tapered face or shoulder 35. The tapered shoulder 35 is designed to fit on the shoulder 30 of the earth formation. The test string 32 may be made up of a plurality of connected lengths of pipe casing or tubing. The test string 32 is releasably connected with the body 31 by a releasable coupling, a safety joint or by threads 36 as shown in the drawings. The threads 36 are preferably left hand threads so that the string 32 may be easily disengaged from the body 31 without loosening the threaded connections of the string.

In carrying out the method of the present invention with the apparatus shown in Fig. 4 the tester body 31 is attached to the lower end of the string 32 and is run into the well on the lower end of the string. The body 31 is run into a position where its inclined shoulder 35 rests on the shoulder 30 and the weight or a portion of the weight of the string 32 is allowed to bear on the body 31 so that the shoulder 35 is held in tight sealing contact with the formation at the shoulder 30. The liquid in the test string 32 may then be removed in any of the well known manners to permit the fluid from the stratum A to flow into the body 31 and the test string 32. The shoulder 35 bearing on the shoulder 30 effectively excludes the well liquid and the hydrostatic pressures in the well from the rat hole R, allowing the stratum A to freely produce into the tester and the test string. The test fluid may be allowed to flow out through the test string 32 or may be bailed or pumped out as conditions may require. After completion of the test, the string 32 may be easily disconnected from the tester body 31 and pulled from the well leaving the body in the well. A suitable drilling tool is then run into the well and operated to crush and drill up the tester body 31. If desired, the same drilling tool may then be employed to continue the drilling operation and deepen the well. The tester disclosed in Fig. 4 of the drawings is extremely simple and inexpensive and the method employing this form of the invention is very rapid and effective.

Figs. 5 and 6 of the drawings illustrate still another form of the invention and another manner of carrying out the method of the invention. The apparatus illustrated in Figs. 5 and 6 includes, generally, a tubular friable body 40, packing means 41 on the body 40 for packing off the stratum D to be tested and a test string 42 for carrying the tester, for operating the packing means 41, and for conducting away or receiving the test fluid.

The body 40 is an elongate tubular member adapted to be positioned in the well bore E to receive fluid from the stratum D to be tested. A plurality of circumferentially and vertically spaced perforations 43 is provided in the lower portion of the tubular body 40 to admit fluid from the formation to the longitudinal body opening 44. The body 40 is provided with a tapered intermediate portion having an upwardly and inwardly inclined surface 45. The body 40 has a reduced cylindrical upper portion 46. The tubular body 40 is preferably integral or monolithic and is formed of a material such as cement, bakelite, glass or the like to be readily crushed and broken up by well drilling tools. The body 40 just described is operatably connected with the test string 42 by the packing means 41.

The packing means 41 is operable to pack or seal between the body 40 and the wall of the well bore E above the stratum D to exclude the liquid in the well and the well pressures from

the stratum D. The packing means 41 includes a tubular member or sleeve 47 surrounding the tapered body surface 45 and surrounding a part of the reduced upper portion 46 of the body. The sleeve 47 is preferably formed of rubber or rubber composition to be expansible so as to seal with the wall of the well bore E and to be readily drilled up by drilling tools. The sleeve 47 has a cylindrical periphery which initially or normally has suitable clearance with the wall of the well bore E. The longitudinal opening of the sleeve 47 has a downwardly and outwardly inclined wall 48 for cooperating with the inclined surface 45 of the body 40. The upper end of the sleeve 47 is preferably flat and normal and the sleeve 47 is preferably proportioned to initially grip the body 40.

The packing means 41 includes in addition to the sleeve 47 a follower or actuating member 49. The member 49 is tubular and the lower portion of its longitudinal opening 50 slidably or shiftably receives the upper portion 46 of the body. The member 41 has a flat normal lower end for bearing on the upper end of the packing sleeve 47. In accordance with the invention the member 49 is connected with the body 40 for longitudinal movement relative thereto. Spaced longitudinal grooves 51 are provided on the wall of the opening 50 to receive the projecting portions of pins 52 on the body portion 46. The pins 52 may be cemented in sockets in the portion 46 or may be otherwise fixed to the body. Openings 53 may be formed in the wall of the member 49 to permit the attachment of the pins 52 to the body portion 46. The openings 53 may be filled with cement or the like after the attachment of the pins to the body. The member 49 is frangible or friable, being formed of cement, bakelite, glass, hard rubber or the like to be readily drilled up by drilling tools.

The string 42 is made up of a plurality of lengths of pipe, casing or tubing. The lower end of the test string 42 is removably or detachably connected with the member 29. The string 42 may be connected with the member 49 by a releasable coupler, a safety joint or by means of threads 54 as shown in the drawings. The threads 54 are preferably left hand threads so that they may be disengaged without loosening the right hand threaded connections of the test string. The test string 42 is threaded in the upper end of the member 49 to be in communication with the opening 50 and the body opening 44.

The method of the invention as carried out in operating the device illustrated in Figs. 5 and 6 is as follows: The parts of the tester proper are assembled as shown and the member 49 is connected with the lower end of the string 42 by the threads 50 so that the tester may be run into the well on the lower end of the test string. The device is run into the well to a position where the lower end of the body 40 rests on the bottom of the well bore. After the apparatus has been positioned, the weight or a portion of the weight of the test string 42 is allowed to rest or settle on the member 49. The weight thus applied to the member 49 causes downward movement of the member 49 and the pressure and movement are transmitted to the packing sleeve 47 causing compression and outward expansion of the sleeve. The cooperation of the inclined body surface 45 and the inclined internal surface 48 of the sleeve causes the sleeve to spread or expand outwardly to tightly seal with the wall of the well bore E. It will be apparent that the sleeve 47 also has tight sealing contact with the body 40 and the lower end of the member 49. Thus, the packing sleeve 47 seals off the well bore above the stratum D to exclude the well liquid and the well pressures from the stratum.

The liquid present within the test string 42 may be pumped out or bailed out, whereupon the fluids in the stratum D may freely pass into the body opening 44 through the ports 43 and flow upwardly into the test string 42. Under some conditions the stratum D may produce fluids under sufficient pressure and in sufficient quantity to flow out through the tubing 42 to the surface. In other instances it may be necessary to withdraw the test fluid from the string 42 by bailing, pumping or the like. In this manner the formation D is easily and quickly tested for its productivity. Following the completion of the test, the test string 42 is rotated in a direction to unthread the threads 54 and is withdrawn from the well leaving the tester resting on the bottom of the well. Drilling tools may then be run into the well to drill up the tester and continue the drilling operations, if this is necessary. The body 40 and the member 49 are formed of material that is readily crushed or broken up by the drilling tools while the rubber sleeve 49 is quickly destroyed when the tester is crushed and drilled up by the drill or drilling tools. The form of the apparatus illustrated in Figs. 5 and 6 of the drawings is operable to dependably seal off the portion of the well to be tested and is simple to operate. Further, the device is inexpensive of manufacture and may be employed without endangering the well.

Having described only typical forms and applications of our invention, we do not wish to be limited or restricted to the specific forms and applications herein set forth, but wish to reserve to ourselves any modifications or variations that may appear to those skilled in the art or fall within the scope of the following claims.

Having described our invention, we claim:

1. Apparatus for testing the formation in a well including a tubular string adapted to be run into the well, a body releasably connected with the lower end of the string and having an opening communicating with the string and perforations for carrying the test fluid to the opening, and means on the body for excluding the well liquid from the stratum tested, said body and means being friable to be drilled up by drilling tools following detachment of the string from the body.

2. Apparatus for testing the formation in a well including a tubular string adapted to be run into the well, a friable body having a longitudinal opening and lateral perforations for conducting the test fluid to the opening, and means connecting the body to the string with its opening in communication with the string, and releasable to permit withdrawal of the string from the well whereupon the body may be drilled up to leave the well clear for further operations.

3. Apparatus for testing the formation in a well including a friable tubular perforate body, a string adapted to be run into the well, and means for connecting the body with the lower end of the string to be run into the well thereon, said means being releasable to permit the withdrawal of the string from the well without the body so that the body may be drilled up to leave the well clear for other operations.

4. Apparatus for testing the formation in a

well bore including a string to be run into the well, a tubular friable body having a lower portion with perforations to receive fluid from the stratum to be tested, means carried by the body for closing off the well above said perforations, and means for connecting the body with the string to be run into the well thereon and releasable to permit withdrawal of the string from the well without the body, leaving the friable body therein to be drilled up.

5. Apparatus for testing the formation in a well including a tubular string adapted to be run into the well, a tubular friable body having perforations in its lower portion to receive fluid from the formation to be tested, a cement basket on the body above the perforations to receive cement for closing off the well above the perforations, and means connecting the body with the lower end of the string and releasable to permit withdrawal of the string from the well without the body so that the body and said cement may be drilled up to leave the well clear after the test.

6. A well tester to be run into the well on a string to obtain fluid from a selected stratum including a tubular friable body adapted to be connected with the lower end of the string and positioned at said stratum, there being perforations in the body to receive the fluids from said stratum, the body being adapted to remain in the well following the withdrawal of the string and being adapted to be drilled up to leave the well clear for other operations.

7. A well tester to be run into the well on a string to obtain fluid from a selected stratum including a tubular friable body adapted to be connected with the lower end of the string and positioned at said stratum, there being perforations in the body to receive the fluids from said stratum, means on the body for closing off the well above the perforations to exclude the well liquids from said stratum, the body with said means being adapted to remain in the well following the withdrawal of the string and being adapted to be drilled up to leave the well clear for further operations.

8. A well tester to be run into the well on a string to obtain fluid from a selected stratum including a friable body adapted to be connected with the lower end of the string and positioned at said stratum, there being perforations in the body to receive the fluids from said stratum, a cement basket on the body for receiving cement for closing off the well above the perforations to exclude the well liquids from said stratum, the cement and the body being adapted to remain in the well following the withdrawal of the string and being adapted to be drilled up to leave the well clear for other operations.

9. A well tester to be run into the well on a string to obtain fluid from a selected stratum including a tubular friable body adapted to be connected with the lower end of the string and positioned at said stratum, there being perforations in the body to receive the fluids from said stratum, a packing sleeve on the body expansible to close off the well above the perforations to exclude the well liquids from said stratum, the body and sleeve being adapted to remain in the well following the withdrawal of the string and being adapted to be drilled up to leave the well clear for further operations.

10. A well tester to be run into the well on a string to obtain fluid from a selected stratum including a tubular friable body adapted to be connected with the lower end of the string and positioned at said stratum, there being perforations in the body to receive the fluids from said stratum, a shoulder on the body adapted to seat on a shoulder of the formation above said stratum to exclude the well liquids therefrom, the body being adapted to remain in the well following the withdrawal of the string and being adapted to be drilled up to leave the well clear for other operations.

11. A well tester to be run into the well on a string to obtain fluid from a selected stratum including a tubular friable body adapted to be connected with the lower end of the string and positioned at said stratum, there being perforations in the body to receive the fluids from said stratum, a frangible seal initially closing off the interior of the body above the perforations, and a cement basket on the body, there being a port in the body above the seal to pass cement to the basket to close off the well above the stratum, the seal being adapted to be broken after the setting of the cement to admit the test fluids to the string, the body and cement being adapted to remain in the well after the removal of the string and being adapted to be drilled up to leave the well clear.

12. A well tester to be run into the well on a string to obtain fluid from a selected stratum including a tubular friable body adapted to be connected with the lower end of the string and positioned at said stratum, there being perforations in the body to receive the fluids from said stratum, an expansible sleeve on the body above the perforations, and a friable member on the body movable to expand the sleeve to close off the well above the perforations to exclude the well liquids from the said stratum, the sleeve, the member and the body being adapted to remain in the well following the withdrawal of the string and being adapted to be drilled up to leave the well clear for other operations.

13. The method of testing the formation in a well including the positioning of a friable tubular member in the well to receive the fluids from a selected stratum by lowering the same into a well on a tubular string, removing the said fluids from the member and string for the purpose of the test, disconnecting the string from the member, removing the string from the well, and then drilling up the member to leave the well clear for further operations.

14. The method of testing the formation in a well including the positioning of a friable perforate tubular member in the well to receive the fluids from a selected stratum by lowering the same into the well on a string, removing the said fluids from the string for the purpose of the test, disconnecting the string from the member, removing the string from the well, and then crushing the member to leave the well clear for further operations.

15. The method of testing the formation in a well including the positioning of a friable perforate tubular member in the well to receive the fluids from a selected stratum, sealing off the well liquids from said stratum to allow the stratum to produce into the member, withdrawing the said fluids from the member for the purpose of the test, and then drilling up the member to leave the well clear for further operations.

16. The method of testing the formation in a well including the positioning of a friable perforate tubular member in the well to receive the fluids from a selected stratum, cementing the member in the well at a point above the said

stratum, removing the fluids from the member for the purpose of the test, and then drilling up the member and cement to leave the well clear for further operations.

17. The method of testing the formation in a well including the positioning of a friable tubular member having a perforate portion in the well to receive the fluids from a selected stratum by running the member into the well on a tubular string, removing the said fluids from the member through the string for the purpose of the test, disconnecting the string from the member, removing the string from the well, and then drilling up the member to leave the well clear for further operations.

18. The method of testing the formation in a well including the positioning of a friable tubular member having a perforate portion in the well to receive the fluids from a selected stratum by running the member into the well on a tubular string, closing off the well around said member to exclude the well liquids from said stratum, removing the said fluids from the member through the string for the purpose of the test, disconnecting the string from the member, removing the string from the well, and then drilling up the member to leave the well clear for further operations.

19. The method of testing the formation in a well including the positioning of a friable tubular member having a perforate portion in the well to receive the fluids from a selected stratum by running the member into the well on a tubular string, closing off the well around said member at a point above said stratum by cementing the member in the well, removing the said fluids from the member through the string for the purpose of the test, disconnecting the string from the member, removing the string from the well, and then drilling up the member to leave the well clear for further operations.

ARTHUR L. ARMENTROUT.
ELWIN B. HALL.