Feb. 11, 1936. A. B. COX 2,030,244

CALIPER

Filed Sept. 28, 1929

FIG. 1.

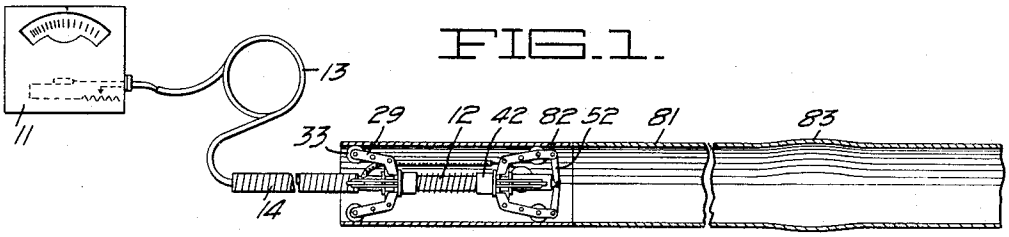

FIG. 2.

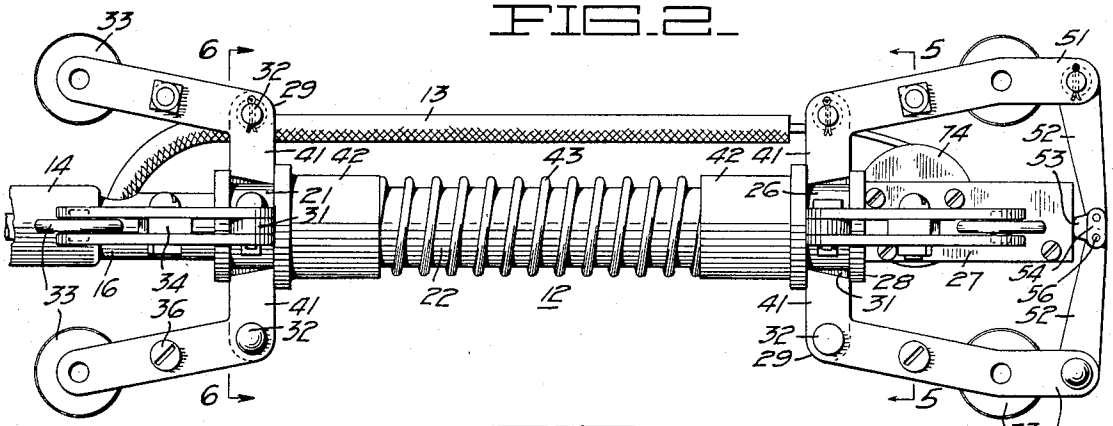

FIG. 3.

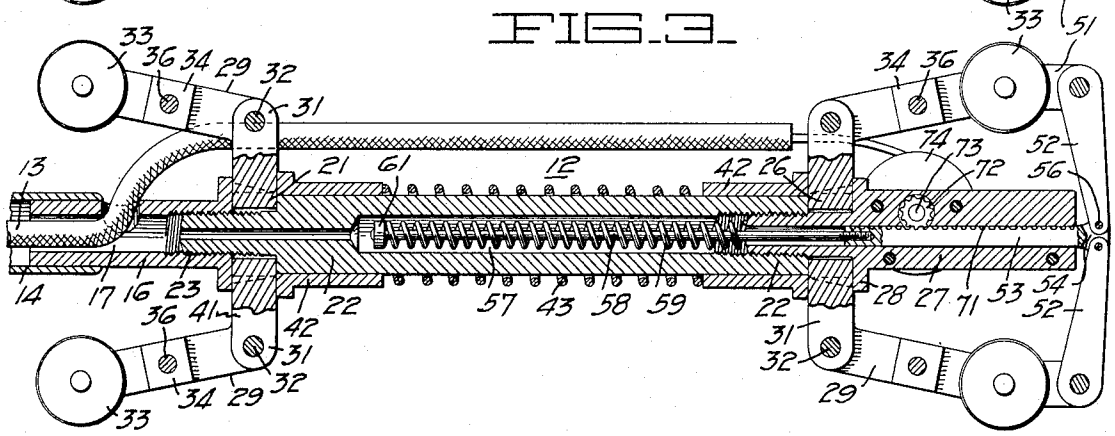

FIG. 5.

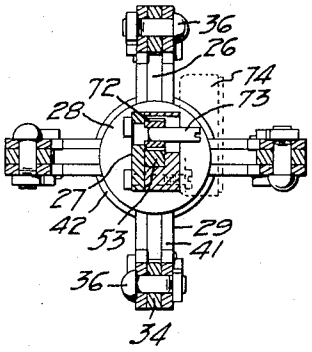

FIG. 6.

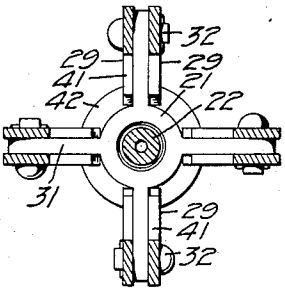

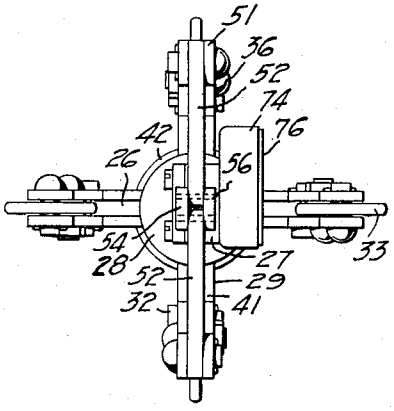

FIG. 4.

INVENTOR.
Albert B. Cox
BY
ATTORNEY

Patented Feb. 11, 1936 2,030,244

UNITED STATES PATENT OFFICE

2,030,244

CALIPER

Albert B. Cox, Wilmington, Calif., assignor to Shell Development Company, San Francisco, Calif., a corporation of Delaware

Application September 28, 1929, Serial No. 395,974

9 Claims. (Cl. 33—178)

My invention relates to those means, usually termed calipers, which are useful for determining the size of a body. More particularly my invention relates to means for determination of the extent of a diameter of a body such as a relatively long tube. My invention has been particularly employed in determining the internal diameter of tubes used in a tube still in cracking oil and I shall describe it in this connection.

As is known in the oil refining art, the oil to be processed is introduced into a series of relatively long tubes suitably joined together to form a tortuous conduit of relatively great length. Throughout a substantial portion of this conduit the oil is subjected, under considerable pressure, to relatively intense heat from a furnace. Under the working conditions, with the high heat and temperatures on one side of the tube and the pressure of the oil on the other side, together with the reacting components contained in the oil, the tubes are subjected to, what is generally conceded to be, relatively severe service. In practice the tubes have a tendency to swell or to be eroded away at certain points due to erosion, chemical action or for other reasons. It is of course readily appreciated that, the failure, under operating conditions, of a tube with the consequent releasing of the pressure and of the contained oil into the furnace is a serious matter. Accordingly all precautions are usually exercised which are possible to avoid such an occurrence and, in this connection, the furnaces are shut down periodically and the tubes examined. However, before an inspector can inspect the tubes the furnace and still must be cooled off, otherwise the man is subjected to very disagreeable and harmful conditions. Heretofore, also, the inspector has been compelled to confine his observations substantially to those tubes which could be visually inspected from the outside inasmuch as there has been no known instrument available for calipering the inside diameter of the tubes throughout their length. In this connection is to be pointed out that the tubes are usually several feet in length, in some instances extending for lengths from 5 to 30 feet.

It is an object of my invention to provide a device which is useful for calipering the inside diameter of relatively long tubes.

Another object of my invention is to provide a device which is capable of indicating at a distance the dimensions of a body.

A further object of my invention is to provide means for determining the inside of a tube and for indicating the result of the determination at a distance from the tube.

My invention possesses other advantageous features some of which with the foregoing will be set forth at length in the following description where I shall outline in full that form of the invention which I have selected for illustration in the drawing accompanying and forming part of the present specification. In the drawing I have shown one form of device embodying my invention, but it is to be understood that I do not limit myself to such form, since the invention as set forth in the claims, may be embodied in the plurality of other forms.

In the drawing to which I have made reference:

Fig. 1 is a schematic view of a device embodying my invention in operation.

Fig. 2 is a plan view of a calipering device employed.

Fig. 3 is a plan view with portions of the calipering device cut away to illustrate a matter of construction.

Fig. 4 is an end elevation of the device illustrated in Fig. 2.

Fig. 5 is a section along the line 5—5 of Fig. 2.

Fig. 6 is a section along the line 6—6 of Fig. 2.

My invention may be briefly characterized as comprising the provision of means for controlling the indication of an indicator; the controlling means being actuated by other means adapted to engage the surfaces of a body to be calipered.

I have found that I can successfully caliper the inside of a relativey long tube by employing means for engaging the surfaces of the tube in combination with external indicating means. In this connection I have successfully employed electrical devices calibrated so that upon a variation in the electrical circuit in which they are included an indication is given which can be readily interpreted to ascertain the extent of the surface with which the caliper is in contact. In this connection I have successfully employed as an indicator a milliammeter 11 which is placed in a suitably energized electrical circuit. The ammeter is conveniently calibrated so that direct readings can be secured giving the inside diameter or any variations therein of a tube. To control the indicating means in accordance with the tube size and with variations therein, I have employed the control means indicated generally at 12 which is electrically connected thru conduit 13 to the indicator. The control means 12 is adapted to be inserted into a tube and to accommodate itself to the extent of the tube so that a control and

variation of the indicator is effected corresponding to the dimensions of the tube.

The control means for the indicator has preferably been provided by forming suitable tube engaging means for connection to a handle 14 which is useful for inserting the aforementioned means into the tube and for retaining it in a predtermined position relative to the tube. The handle is conveniently joined to a hollow member 16 as by welding. The member 16 is conveniently provided with an aperture 17 to receive the conduit 13 and to permit its insertion and passage thru the handle.

To secure the tube engaging means I preferably position spider 21 between the member 16 and extension member 22. Conveniently the extension member is adapted to be screwed into the hollow member 16 by threads 23 so that the spider is positively secured in position. A second spider 26 is conveniently secured at the other end of the extension member 22 by threadedly securing a member 27 having a boss 28 to the extension.

Means are provided upon each of these spiders for engaging the tube. Thus, I provide arcuately formed arms 29 pivotally mounted upon each spider arm 31 by pins 32. I preferably provide a plurality of the arms upon each of the spider arms and adjacent each other so that a roller 33 is conveniently rotatably mounted between them. To ensure that the arms are maintained apart a sufficient distance so that an easy turning of the rollers is possible, I provide spacers 34 which are secured between the respective arms by bolts 36.

For reasons which will presently appear I form extensions 41 on each of the arms 29 in such a manner that the extensions are adapted to be abutted by sliding members 42 carried on the extending member 22. Upon a contacting of the rollers 33 with the surface of the tube the extensions 41 will be moved with respect to the spider arms 31 so that the sliding members 42 are slid along the extension 22. To urge the rollers 33 into engagement with the surfaces of the tubes I preferably position a spring 43 between the sliding members 42 and about the extension 22 so that the sliding members are biased and are urged apart. It is believed to be apparent that, in this manner, the several tube contacting means are constantly urged into full and close engagement with the surfaces of the tube.

In conjunction with the tube contacting means I preferably provide means for controlling the indicator 11 in accordance with variations occurring in the contacting means. Preferably, I accomplish this by continuing arms 29 to form ends 51. This has preferably been done with only two of the opposite arms so that a swelling of the tube along substantially only one diameter is indicated. It is of course apparent that modifications may be readily made to enable indications to be secured simultaneously along another or several diameters of the tube. I will term the arms 29 having the ends 51 as "feelers" to distinguish them from the arms 29 without the end addition which latter I will term "guides".

Pivotally joined to each of the ends 51 are fingers 52. A shaft 53, which is carried by the hollow extension 27, has a yoke 54 formed at one end. This yoke is adapted to receive the fingers 52 and to be movably joined to them by pins 56.

The shaft 53 preferably extends thru into a channel 57 formed in the member 22. A usually smaller rod 58 is threadedly secured to the shaft 53 and carries a spring 59. The spring is provided to abut against the member 27 while a nut 61, provided on the end of the shaft, serves to adjust the tension of the spring. Upon a movement of the ends of the feelers to which the fingers are joined the fingers retractably urge the shaft into or out of the member 27. The fingers are so arranged that this movement corresponds substantially with the movement of the feelers. However, I prefer that the relationship of the fingers to the feelers be such that a considerable magnification is effected of the movement of the rollers when this movement is transmitted by the fingers to the shaft 53.

I preferably utilize the movement of the shaft 53 to furnish a control for the exteriorly provided indicating means. This I have effected by forming a rack 71 along the shaft and by providing a gear 72 rotatably within the member 27 so that it contacts with the rack and is rotated upon movement thereof. A stub shaft 73 extends thru the member 27 and is rotatable therein to carry the gear 72. This shaft I utilize to vary the position of a contact arm (not shown) provided on the shaft with respect to a resistance element 76 formed on a base 74. The resistance 76 and the rotatable contacting arms are provided in the circuit of the indicating means so that a suitable variation is made of the resistance in the circuit in accordance with the movement of the tube engaging means.

With the indicating means suitably calibrated the calipering device is suitably inserted for calipering into a tube 81. Preferably the calipering means is introduced by means of a tube 82 which conforms substantially to the dimensions of the tube to be calipered. This materially facilitates the introduction of the calipering means. Upon a contacting of the calipering means with a swelling in the tubes as is indicated at 83 in Fig. 1 the feelers will be urged out into contacting with the swelling surfaces and will, accordingly, as I have previously set forth, vary the circuit controlling means. This variation will be indicated on the indicating means. In accordance with the calibration of the indicating means the extent of the variation and of the swelling in the tube can be determined. The flexible handle 14 is preferably of such a length that the calipering device can be extended into the tube and manipulated throughout its length.

I claim:

1. In a calipering device for detecting and measuring variations in the inside diameter of a relatively long cylindrical tube, the combination of an elongated member adapted for longitudinal movement within the tube, spring-expanded bell crank-shaped feelers mounted at one end and spring expanded guides mounted at both ends of the said member for continuously centering same in the tube, contact rollers mounted on the feelers at a distance from the outer ends thereof, link connections between said ends of the feelers allowing radial expansion thereof, and an indicating means cooperating with said link connections for measuring the radial movement of the feelers.

2. In a calipering device for detecting and measuring variations in the inside diameter of a relatively long cylindrical tube, a combination of an elongated member adapted for longitudinal movement within the tube, spring-expanded bell crank-shaped feelers mounted at one end and spring expanded guides mounted at both ends of

said member for continuously centering same in the tube, contact rollers mounted on the feelers at a distance from the outer end thereof, link connections between said ends of the feelers allowing radial expansion thereof, a spring means operating to maintain said link connections under tension, and an indicating means cooperating with said link connections for measuring the radial movement of the feelers.

3. In a calipering device of the type described, an elongated member, a pair of opposed radially expansible guide arms mounted on said member and adapted to engage the inner walls of the tube, resilient means urging said opposed members against the inner wall of said tube, a pair of radially opposed feelers on said member circumferentially staggered with respect to the guide members and adapted to engage the inner wall of said tube, said resilient means also being connected to said feelers for pressing same against said wall, and means for indicating the radial movement of said feelers.

4. A calipering device comprising a hollow elongated member, means on said member to center it in a tube, a plunger slidably mounted in said member, resilient means arranged to urge said plunger in one direction, at least one feeler arm pivoted on said member and adapted to engage the inner wall of the tube by outward angular movement of said feeler arm about its pivot, a link pivotally connected to said feeler and to said plu ger and arranged to move the plunger in opposition to the action of said resilient means when the feeler is moved inwardly, said links continuously translating the tension of the resilient means to the feelers to press them against the walls of the tube and means to indicate the movement of said plunger.

5. A calipering device comprising an elongated member, means on said member to center it in a tube, an axial recess in said member, an axially movable plunger in said recess, spring means arranged to urge said plunger in one direction, a plurality of feeler arms pivoted on said member and adapted to engage the inner walls of said tube by outward angular movement of said feeler arms about their pivots, a link for each feeler arm pivotally connected to its feeler arm and to said plunger and arranged to move the plunger in opposition to the action of said spring means when its feeler arm is moved inwardly, said links continuously translating the tension of the spring means to the feelers to press them against the walls of the tube, and means to indicate the movement of said plunger.

6. A calipering device comprising an elongated member, means at a first end of said member to center said end in a tube being calipered, a pair of radially opposed guide arms at the second end of said member arranged to center the latter end of said member in the tube, an axial recess in said member, an axially movable plunger in said recess, spring means arranged to urge said plunger in one direction, a pair of radially opposed feeler arms pivoted on said member at its second end, circumferentially staggered with respect to the pair of opposed guide arms, and adapted to engage the inner walls of said tube by outward angular movement of said feeler arms about their pivots, a link for each feeler arm pivotally connected to its feeler arm and to said plunger arm arranged to move the plunger in opposition to the action of said spring means when its feeler arm is moved inwardly, said links continuously translating the tension of the spring means to the feelers to press them against the walls of the tube, and means to indicate the movement of said plunger.

7. In a calipering device having an elongated member, radially movable feeler means on said member and means to indicate the radial movement of said feeler means, the combination of a plurality of circumferentially spaced guide arms pivotally mounted at each end of said member adapted to engage the inner wall of a tube and to center the said member in said tube, a collar at each end of said member arranged and constructed to move the guide arms at its end outwardly by engagement with said guide arms, and common spring means on said member arranged to press both said collars into engagement with the guide arms, whereby the force of said spring will move the guide arms outwardly.

8. In a calipering device for detecting and measuring variations in the inside diameter of a relatively long cylindrical tube, the combination of an elongated member adapted for longitudinal movement within the tube, spring-expanded feelers mounted at one end and spring expanded guides pivotally mounted at both ends of said member for continuously centering the same in the tube, a slidable plunger axially mounted within said member, link connections between said plunger and the outward ends of the feelers adapted to move the plunger axially in one direction when the feelers move outwardly, and to move the plunger in the opposite direction when the feelers move inwardly, and indicating means cooperating with said plunger and said link connections for measuring the radial movement of the feelers.

9. In a calipering device for detecting and measuring variations in the inside diameter of a relatively long cylindrical tube, the combination of an elongated member adapted for longitudinal movement within the tube, spring-expanded feelers mounted at one end and spring expanded guides pivotally mounted at both ends of said member for continuously centering the same in the tube, a slidable plunger provided with a rack mounted within said member, link connections between said plunger and the outward ends of the feelers adapted to move the plunger axially in one direction when the feelers move outwardly, and to move the plunger in the opposite direction when the feelers move inwardly, a pinion mounted within said member and engaging said rack, and indicating means cooperating with said pinion to register the amount of axial movement of the rack caused by radial expansion of the feelers.

ALBERT B. COX.