US 20100254278A1

(19) United States

(12) Patent Application Publication

(10) Pub. No.: US 2010/0254278 A1

(43) Pub. Date: Oct. 7, 2010

Kliger et al.

(54) ASSESSMENT IN AN INFORMATION NETWORK

(75) Inventors: **Avi Kliger**, Ramat Gan (IL); **Philippe Klein**, Jerusalem (IL); **Yitshak Ohana**, Givat Zeev (IL)

Correspondence Address:
Weiss & Arons, LLP
1540 Route 202, Suite 8
Pomona, NY 10970 (US)

(73) Assignee: **Broadcom Corporation**, Irvine, CA (US)

(21) Appl. No.: **12/748,625**

(22) Filed: **Mar. 29, 2010**

Related U.S. Application Data

(60) Provisional application No. 61/167,255, filed on Apr. 7, 2009.

Publication Classification

(51) **Int. Cl.**
H04L 12/26 (2006.01)

(52) **U.S. Cl.** **370/252**

(57) **ABSTRACT**

A method for assessing channel performance in a home communication network is provided. The home communication network is operable over a plurality of channels. The home communication network includes a network controller and a plurality of nodes. Each of the network controller and the plurality of nodes is in communication over a coax backbone. The method preferably includes selecting a channel for assessment and allocating a first probe operation for use with the plurality of nodes. The method may also include, in response to the allocating, sending a first probe operation report message from each of the plurality of nodes to the network controller. In response to receiving the first probe operation report messages, the method may further include using the network controller to select a node to be a channel assessment operation node. In addition, the method may include selecting at least a portion of the plurality of nodes to participate in a channel assessment operation signal exchange. The method may also include moving the selected nodes to a different channel to perform a channel assessment operation on the different channel and using the channel assessment operation node to allocate a second probe operation on each of the selected nodes.

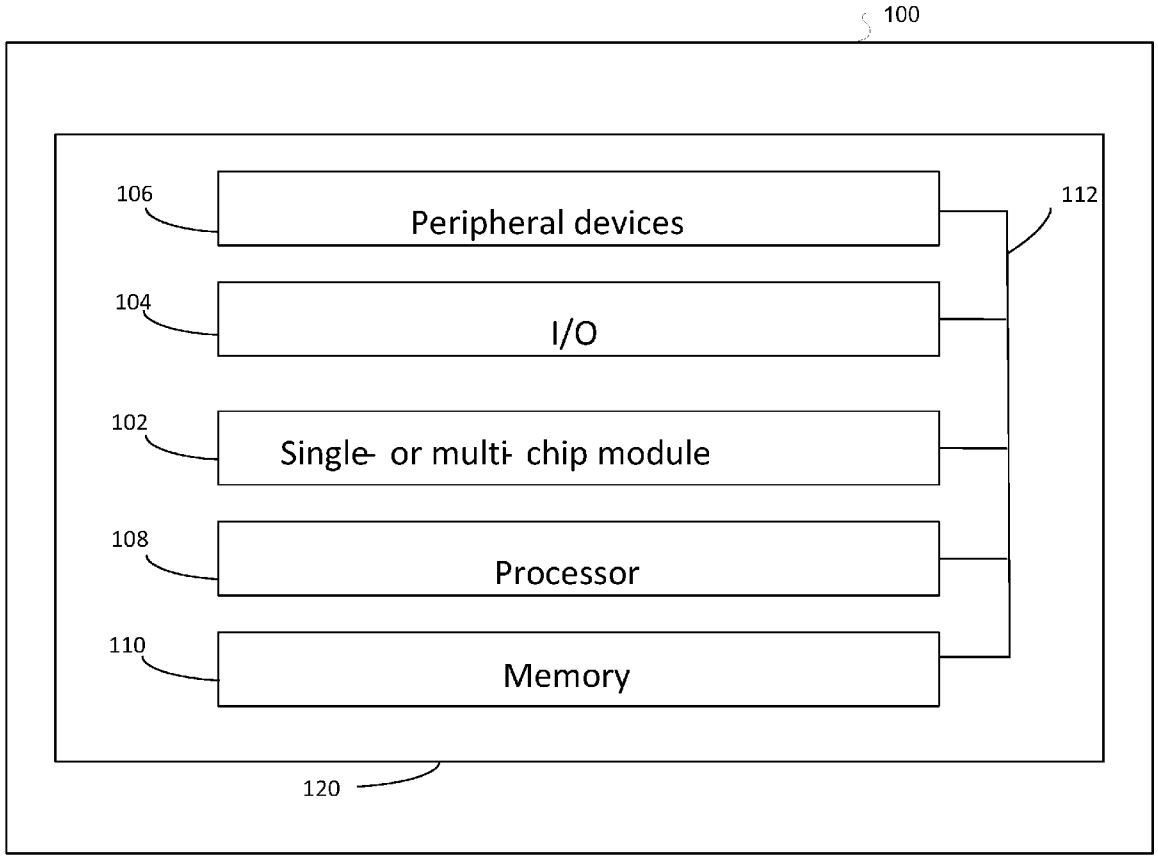

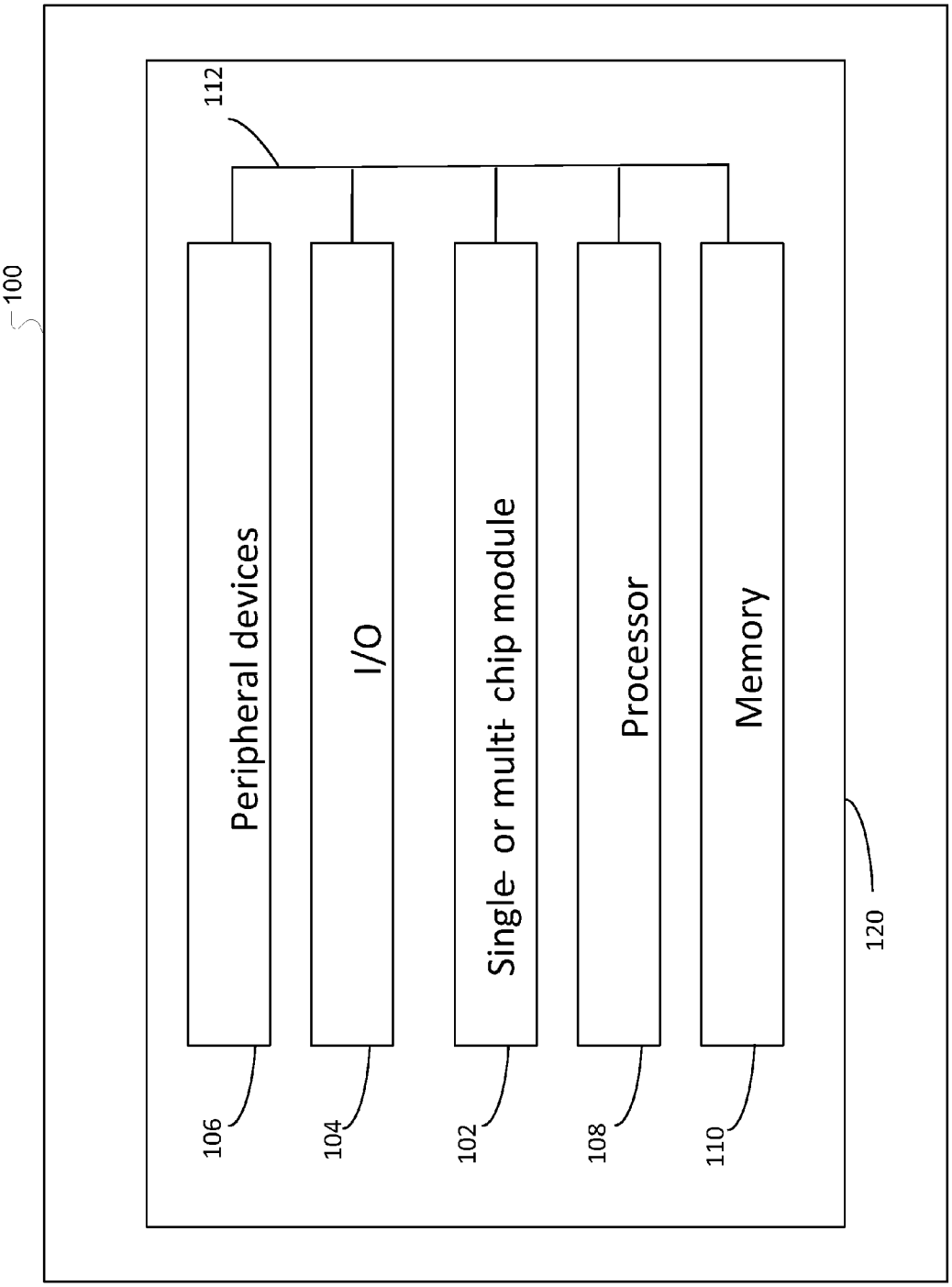
100
112
Peripheral devices
I/O
Single- or multi- chip module
Processor
Memory
106
104
102
108
110
120

FIG. 1

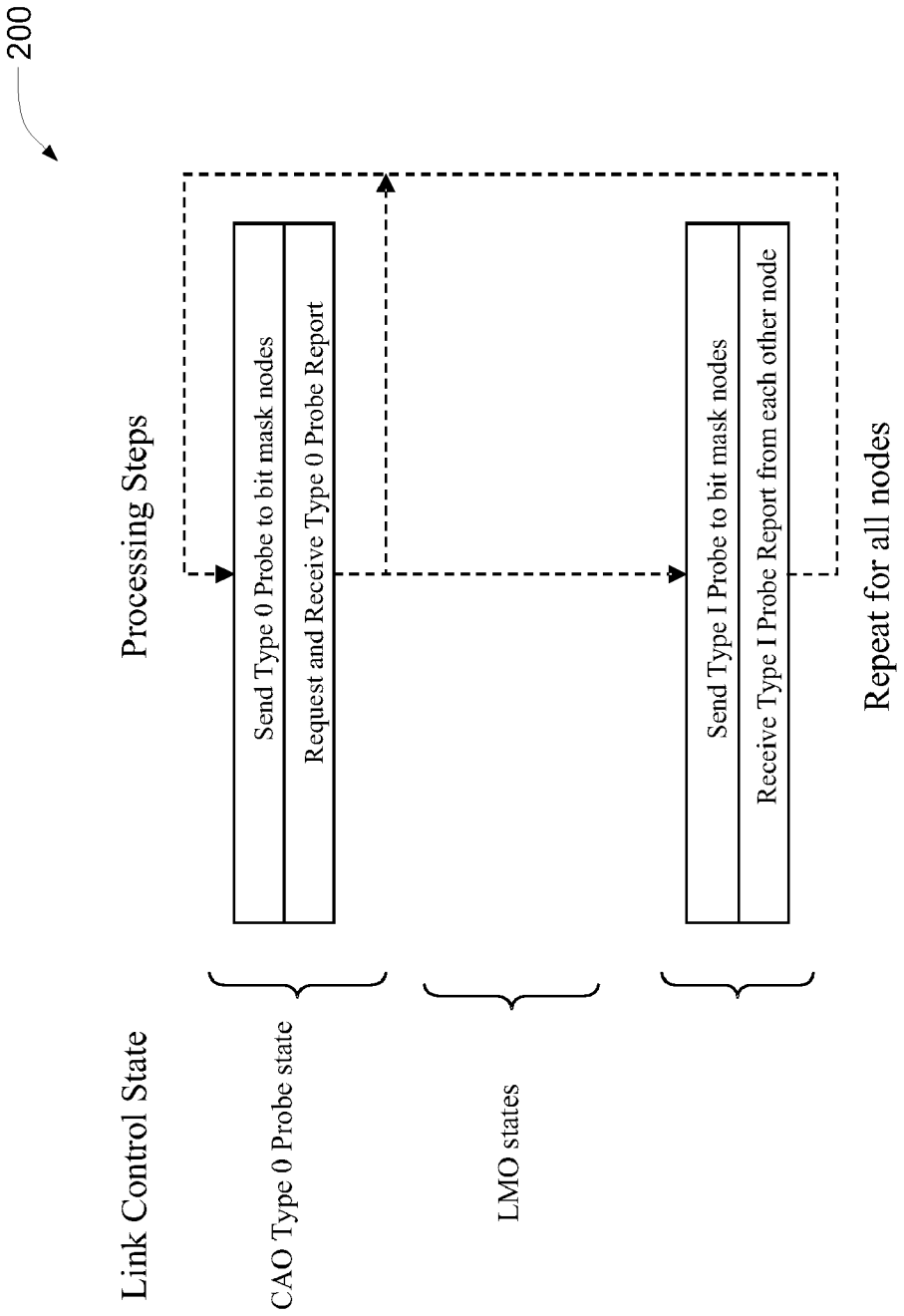
200
Link Control State
Processing Steps
CAO Type 0 Probe state
Send Type 0 Probe to bit mask nodes
Request and Receive Type 0 Probe Report
LMO states
Send Type I Probe to bit mask nodes
Receive Type I Probe Report from each other node
Repeat for all nodes

FIG. 2

ASSESSMENT IN AN INFORMATION NETWORK

FIELD OF TECHNOLOGY

[0001] The present invention relates generally to information networks and specifically to transmitting information such as media information over communication lines such as coaxial cable (hereinafter "coax"), thereby to form a communications network.

BACKGROUND

[0002] Home networking over coax is a known technology which has vast commercial potential.

[0003] Home network technologies having packet aggregation functionality are known generally. The Multimedia over Coax Alliance (MoCA™), at its website mocalliance.org, provides an example of a suitable specification (MoCA 1.0) for networking of digital video and entertainment through existing coaxial cable in the home which has been distributed to an open membership. Packet aggregation functionality is not provided. MoCA 1.0 specification is incorporated by reference herein in its entirety.

[0004] Home networking over coax taps into the vast amounts of unused bandwidth available on the in-home coax. More than 70% of homes in the United States have coax already installed into the home infrastructure. Many have existing coax in one or more primary entertainment consumption locations such as family rooms, media rooms and master bedrooms—ideal for deploying networks. Home networking technology allows homeowners to utilize this infrastructure as a networking system and to deliver other entertainment and information programming with high QoS (Quality of Service).

[0005] The technology underlying home networking over coax provides high speed (270 mbps), high QoS, and the innate security of a shielded, wired connection combined with state of the art packet-level encryption. Coax is designed for carrying high bandwidth video. Today, it is regularly used to securely deliver millions of dollars of pay per view and premium video content on a daily basis. Home networking over coax can also be used as a backbone for multiple wireless access points used to extend the reach of wireless network throughout a consumer's entire home.

[0006] Home networking over coax provides a consistent, high throughput, high quality connection through the existing coaxial cables to the places where the video devices currently reside in the home without affecting the existing analog or digital services present on the cable. Home networking over coax provides a primary link for digital entertainment, and may also act in concert with other wired and wireless networks to extend the entertainment experience throughout the home.

[0007] Currently, home networking over coax works with access technologies such as ADSL and VDSL services or Fiber to the Home (FTTH), that typically enter the home on a twisted pair or on an optical fiber, operating in a frequency band from a few hundred kilohertz to 8.5 MHz for ADSL and 12 MHz for VDSL. As services reach the home via xDSL or FTTH, they may be routed via home networking over coax technology and the in-home coax to the video devices. Cable functionalities, such as video, voice and Internet access, may be provided to homes, via coaxial cable, by cable operators, and use coaxial cables running within the homes to reach individual cable service consuming devices locating in various rooms within the home. Typically, home networking over coax type functionalities run in parallel with the cable functionalities, on different frequencies.

[0008] The coax infrastructure inside the house typically includes coaxial wires and splitters. Splitters used in homes typically have one input and two or more outputs and are designed to transfer signals from input to outputs in the forward direction, or from outputs to input in the backward direction and to isolate splitter outputs and prevent signals from flowing room/outlet to room/outlet. Isolation is useful in order to a) reduce interference from other devices and b) maximize power transfer from Point Of Entry (POE) to outlets for best TV reception.

[0009] The MoCA technology is specifically designed to go backwards through splitters (insertion) and go from splitter output to output (isolation). All outlets in a house can be reached from each other by a single "isolation jump" and a number of "insertion jumps". Typically isolation jumps have an attenuation of 5 to 40 dB and each insertion jump attenuates approximately 3 dB. MoCA has a dynamic range in excess of 55 dB while supporting 200 Mbps throughput. Therefore MoCA can work effectively through a significant number of splitters.

[0010] MoCA is a managed network unlike some other home networking technologies. It is specifically designed to support streaming video without packet loss providing very high video quality between outlets.

[0011] Digital cable programming is delivered with threshold Packet Error Rate (PER) of below 1e-6. The home network should preferably have similar or better performance so as not to degrade viewing.

[0012] Later versions of the MoCA specification may require or permit that a MoCA device transmit and receive on more than one channel. For the purposes of this application the term "channel" should be understood to refer to an operational frequency upon which a MoCA network can operate.

[0013] The disclosures of any publications and patent documents mentioned in the specification, and of the publications and patent documents cited therein directly or indirectly, are hereby incorporated by reference.

SUMMARY OF THE INVENTION

[0014] A system and/or method channel assessment in a communications network, substantially as shown in and/or described in connection with at least one of the figures, as set forth more completely in the claims.

BRIEF DESCRIPTION OF THE DRAWINGS

[0015] The objects and advantages of the invention will be apparent upon consideration of the following detailed description, taken in conjunction with the accompanying drawings, in which like reference characters refer to like parts throughout, and in which:

[0016] FIG. **1** shows a schematic diagram of an illustrative single or multi-chip device that may be used in accordance with principles of the invention; and

[0017] FIG. **2** shows illustrative steps of a process in accordance with the principles of the invention.

DETAILED DESCRIPTION OF THE INVENTION

[0018] Apparatus and methods for channel assessment in a communication network are provided. In some embodiments,

the apparatus and methods may move a node from a first channel to a second channel to assess performance of the node on the second channel. The performance may be dependent on noisiness of the node on the second channel.

[0019] Some embodiments may involve "Another Channel Assessment," which is a procedure that allows nodes to move to another channel for interference detection or expected performance assessments.

[0020] A channel assessment operation ("CAO") may be triggered by an application that is external to a network controller ("NC"). The CAO may be managed and scheduled by the NC. The NC may gather channel assessment results. In certain embodiments, the CAO may be identified in a Media Access Plan ("MAP") as a link state.

[0021] The channel assessment results may include information regarding noise conditions on each node input and full mesh rate for each node on each channel. The channel assessment results may also provide an estimation of the achievable capacity in the assessed channel.

[0022] The channel assessment results may be accessible by a higher layer application. The results may include for each node and channel information regarding noise measured or estimated for each channel at each of the nodes. The information may include MoCA Probe0 information. MoCA Probe0 information corresponds to a period of time on the network when none of the nodes transmit information. It is a silent probe and, to reiterate, all nodes in the network preferably do not transmit during this silent probe. Rather, it is a period of time in which each node measures the existing noise on the network from the respective node's perspective.

[0023] The higher layer application may decide whether to initiate a transfer from one channel to another channel. The higher layer application may assess the whole band—i.e., each operational frequency available to the network—to determine an optimal channel for the implementation of the higher layer application's network. Once channel assessment results are available for the application, it may decide to move the network to another channel. Illustrative reasons to move the network to another channel include:

[0024] 1. The performance on the current channel is not sufficient to provide the required throughput due to either large attenuations or some RF ingress interference.

[0025] 2. Moving the network to another channel is required to improve the performance further or reduce aggregated transmission power by moving to a channel that has better noise and attenuation conditions.

[0026] 3. A new node that joined the network reduces significantly the network aggregated throughput, or is creating some unusable channels.

[0027] Illustrative embodiments of apparatus and methods in accordance with the principles of the invention will now be described with reference to the accompanying drawings, which form a part hereof. It is to be understood that other embodiments may be utilized and structural, functional and procedural modifications may be made without departing from the scope and spirit of the present invention.

[0028] As will be appreciated by one of skill in the art, the invention described herein may be embodied in whole or in part as a method, a data processing system, or a computer program product. Accordingly, the invention may take the form of an entirely hardware embodiment, an entirely software embodiment or an embodiment combining software, hardware and any other suitable approach or apparatus.

[0029] Furthermore, such aspects may take the form of a computer program product stored by one or more computer-readable storage media having computer-readable program code, or instructions, embodied in or on the storage media. Any suitable computer readable storage media may be utilized, including hard disks, CD-ROMs, optical storage devices, magnetic storage devices, and/or any combination thereof. In addition, various signals representing data or events as described herein may be transferred between a source and a destination in the form of electromagnetic waves traveling through signal-conducting media such as metal wires, optical fibers, and/or wireless transmission media (e.g., air and/or space).

[0030] FIG. **1** shows a single or multi-chip module **102** according to the invention, which can be one or more integrated circuits, in an illustrative data processing system **100** according to the invention. Data processing system **100** may include one or more of the following components: I/O circuitry **104**, peripheral devices **106**, processor **108** and memory **110**. These components may be coupled together by a system bus or other interconnections **112** and are disposed on a circuit board **120** in an end-user system **130** that may be in communication with a coax medium via an interface.

[0031] For the sake of clarity, the foregoing description, including specific examples of parameter values provided, is sometimes specific to certain protocols such as those identified with the name MoCA™ and/or Ethernet protocols. However, this is not intended to be limiting and the invention may be suitably generalized to other protocols and/or other packet protocols. The use of terms that may be specific to a particular protocol such as that identified by the name MoCA™ or Ethernet to describe a particular feature or embodiment is not intended to limit the scope of that feature or embodiment to that protocol specifically; instead the terms are used generally and are each intended to include parallel and similar terms defined under other protocols.

[0032] It is appreciated that software components of the present invention including programs and data may, if desired, be implemented in ROM (read only memory) form including CD-ROMs, EPROMs and EEPROMs, or may be stored in any other suitable computer-readable medium such as but not limited to disks of various kinds, cards of various kinds and RAMs. Components described herein as software may, alternatively, be implemented wholly or partly in hardware, if desired, using conventional techniques.

[0033] Features of the present invention which are described in the context of separate embodiments may be provided in combination in a single embodiment. Conversely, features of the invention which are described for brevity in the context of a single embodiment may be provided separately or in any suitable subcombination.

[0034] As will be appreciated by one of skill in the art, the invention described herein may be embodied in whole or in part as a method, a data processing system, chip, component or device, or a computer program product. Accordingly, the invention may take the form of an entirely hardware embodiment, an entirely software embodiment or an embodiment combining software, hardware and any other suitable approach or apparatus.

[0035] The invention may be operational with numerous other general purpose or special purpose computing system environments or configurations. Examples of well known computing systems, environments, and/or configurations that may be suitable for use with the invention include, but are not

limited to, personal computers, server computers, handheld or laptop devices, mobile phones and/or other personal digital assistants ("PDAs"), multiprocessor systems, microprocessor-based systems, set top boxes, programmable consumer electronics, network PCs, minicomputers, mainframe computers, distributed computing environments that include any of the above systems or devices, and the like. In a distributed computing environment, devices that perform the same or similar function may be viewed as being part of a "module" even if the devices are separate (whether local or remote) from each other.

[0036] The invention may be described in the general context of computer-executable instructions, such as program modules, being executed by a computer. Generally, program modules may include routines, programs, objects, components, data structures, etc., that perform particular tasks or store or process data structures, objects and other data types. The invention may also be practiced in distributed computing environments where tasks are performed by separate (local or remote) processing devices that are linked through a communications network. In a distributed computing environment, program modules may be located in both local and remote computer storage media including memory storage devices.

[0037] Processes in accordance with the principles of the invention may include one or more features of the process illustrated in FIG. **2**. For the sake of illustration, the steps of the process illustrated in FIG. **2** will be described as being performed by a "system". The "system" may include one or more of the features of the apparatus that are shown in FIG. **1** and/or any other suitable device or approach. The "system" may be provided by an entity. The entity may be an individual, an organization or any other suitable entity.

[0038] FIG. **2** shows illustrative channel assessment process **200**. Process **200** may send Type 0 Probe to bit mask nodes, Request and Receive Type 0 Probe Report, Send Type I Probe to bit mask nodes, and Receive Type I Probe Report from each other node. The process may be repeated for some or all of the other nodes.

[0039] Type 0 probe is a time period in which all nodes of a network, and in some embodiments a subset of the network, are quiet. Type 0 probe may be used for detecting the existence of interference or another network (Beacon detecting) by the assessing node.

[0040] In some embodiments, a channel assessment operation may proceed as follows:

[0041] (1) NC selects a channel for assessment;

[0042] (2) NC allocates a "Probe-0" operation for all nodes or a list of nodes;

[0043] (3) All nodes that participated in (2) send Probe 0 report message to the NC;

[0044] (4) NC may select a node to be a "CAO node" (based on the reported Probe-0 results) and a list of nodes that may or must participate in the CAO signal exchange, or go back to (1);

[0045] (5) Selected nodes move to the selected channel to perform CAO Probe 1 where the CAO transmits Probe 1 message to all other nodes;

[0046] (6) NC selects the next node to be the CAO node and the process in (4) and (5) is repeated;

[0047] (7) All nodes that participated in the CAO process send their calculated full mesh rate ("FMR") on the assessed channel to the NC, using CAO probe 1 report; and

[0048] (8) NC may select another channel for assessment and go back to (1).

[0049] In some embodiments, the following factors may be considered in connection with a transition from one channel to another channel:

[0050] 1. NC MUST allocate a Transition Time for a node to move to another channel (Tlo ~100 uSec).

[0051] 2. During this time transmission on the current channel can continue.

[0052] 3. After Tlo and until the allocated time for the Probe0 operation and Type I Probe operation NC should preferably not allocate any transmission opportunity on the current channel.

[0053] 4. One CAO step should preferably follow a full link maintenance operation ("LMO") procedure.

[0054] In some embodiments, messages may be used in connection with channel assessment. Illustrative messages include:

[0055] 1. "Probe__0_for_channel_Assessment_Report"

[0056] NC may use this command to schedule a node to send a Probe 0 report on the assessed channel.

[0057] 2. "FMR_for_channel_Assessment_Report"

[0058] NC may use this command to schedule a node to send a Full Mesh Rates per the assessed channel.

[0059] Table 1 shows illustrative link state fields and other associated fields within a MAP frame to indicate a CAO State.

TABLE 1

Link__State	32 bits	Informs nodes of the state of the network. Least significant nibble indicates Link Control state - 0x0 = Deprecated - treat as 0x6 0x1 = Begin Node Admission state 0x2 = New Node Type I Probe TX state 0x3 = New Node Type I Probe RX state 0x4 = New GCD Distribution state 0x5 = Begin PHY Profile state 0x6 = Steady state 0x7 = Type III Probe state 0x8 = LMO Type I Probe state 0x9 = LMO Node GCD Distribution state 0xA = Begin LMO PHY Profile state 0xB - GCD LMO state 0xC - CAO Type 0 Probe state 0xD - CAO Type I Probe state All other values reserved.
LMO/CAO__NODE	16 bits	if LINK__STATE = 0x7-0xB Node ID of link node that is the current LMO node. if LINK__STATE = 0xC-0xD Node ID of link node that is the current CAO node. Note that this field should contain valid node ID only in Link Control states 0x7-0xD and should be ignored in all other Link Control states.
LMO__DESTINATION/ CAO__DESTINATIONBIT MASK	16 bits	if LINK__STATE = 0x7-0xB Node ID for destination node Always set to BROADCAST (0x3F) if LINK__STATE = 0xC-0xD Node ID bit mask for the CAO destination nodes

[0060] In some embodiments, a process to move to another channel may be initiated by the NC. The NC may remain NC

on the other channel. Each node may set its LoF to the selected channel's frequency. Each node may use a random backoff to start admission to the new channel. A move to another channel may interrupt network operation and should not be done frequently.

[0061] Table 2 shows an illustrative Type 0 Probe report request format.

TABLE 2

Field	Length	Usage
	MAC Header	
Transmit_Clock	32 bits	
Packet_Subtype	4 bits	Type 0/I/III Probe Report Request (0x5)
Packet_Type	4 bits	Link Control (0x2)
Version	8 bits	
reserved	8 bits	0x00; Type I
Source_Node_ID	8 bits	Source node ID
reserved	8 bits	0x00; Type I
Destination_Node_ID	8 bits	Destination node ID
Packet_Length	16 bits	
reserved	32 bits	Type III
Header_Checksum	16 bits	Only following values allowed - 0x1 - Type I Probe 0x2 - Type II Probe 0x4 - Type III Probe. 0x5 - GCD Type I Probe 0x6 - Type 0 Probe
	Frame payload	
Report Source Node	8 bits	Node ID of the CAO node
Report Destination Node	8 bits	Node ID of the NC node
Reserved	16 bits	Type II
RESERVED	32 bits	Type II
	Payload CRC	
PAYLOAD_CRC	32 bits	

[0062] Table 3 shows an illustrative Type 0 Probe Report

[0063] Frame Format.

TABLE 3

Field	Length	Usage
	MAC Header	
TRANSMIT_CLOCK	32 bits	
PACKET_SUBTYPE	4 bits	Type 0 Probe Report (0xF)
PACKET_TYPE	4 bits	Link Control (0x2)
VERSION	8 bits	
RESERVED	8 bits	0x00; Type I
SOURCE_NODE_ID	8 bits	Source node ID
RESERVED	8 bits	0x00; Type I
DESTINATION_NODE_ID	8 bits	Destination node ID
PACKET_LENGTH	16 bits	
RESERVED	32 bits	Type III
HEADER_CHECKSUM	16 bits	
	Frame payload	
NUM_ELEMENTS	8 bits	the total number of element each element indicates the average noise of 8 successive sub carrier
For j = 0; j < 512; j++ {		
NOISE (RECEIVED LEVEL)	8 bits	This field is quantitative indication on the received level of the noise for a sub-carrier
}		

TABLE 3-continued

Field	Length	Usage
NETWORK_DETECT	8 bits	Network detect on the assessment channel 00 - not detect 10 - MoCA 1.0 network detect 11 - MoCA 1.1 network detect 20 - MoCA 2.0 network detect
	RESERVED	
Payload CRC		

[0064] Table 4 shows an illustrative New Probe subtype for Type 0 Probe.

TABLE 4

FIELD	LENGTH	USAGE
PROBE_SUBTYPE	4 BITS	ONLY FOLLOWING VALUES ALLOWED - 0X1 - TYPE I PROBE 0X2 - TYPE II PROBE 0X4 - TYPE III PROBE. 0X5 - GCD TYPE I PROBE 0X6 - TYPE 0 PROBE

[0065] All bits in the RESERVED fields in the syntax should preferably be set to 0.

[0066] One of ordinary skill in the art will appreciate that the steps shown and described herein may be performed in other than the recited order and that one or more steps illustrated may be optional. The methods of the above-referenced embodiments may involve the use of any suitable elements, steps, computer-executable instructions, or computer-readable data structures. In this regard, other embodiments are disclosed herein as well that can be partially or wholly implemented on a computer-readable medium, for example, by storing computer-executable instructions or modules or by utilizing computer-readable data structures.

[0067] Thus, systems and methods for channel assessment have been provided. Persons skilled in the art will appreciate that the present invention can be practiced by other than the described embodiments, which are presented for purposes of illustration rather than of limitation.

1. A method for assessing channel performance in a home communication network, the home communication network operable over a plurality of channels, the home communication network comprising a network controller and a plurality of nodes, each of the network controller and the plurality of nodes in communication over a coax backbone, the method comprising;

selecting a channel for assessment;

allocating a first probe operation for use with the plurality of nodes;

in response to the allocating, sending a first probe operation report message from each of the plurality of nodes to the network controller;

in response to receiving the first probe operation report messages, using the network controller to select a node to be a channel assessment operation node;

selecting at least a portion of the plurality of nodes to participate in a channel assessment operation signal exchange; and

moving the selected nodes to a different channel to perform a channel assessment operation on the different channel.

2. The method of claim **1** further comprising using the network controller to replace the channel assessment node with a second channel assessment node from the plurality of nodes.

3. The method of claim **2** further comprising using the second channel assessment node to allocate the second probe operation on each of the selected nodes.

4. The method of claim **3** further comprising providing using a second probe report, from the channel assessment node to the network controller, an estimation of the achievable capacity in the assessed channel.

5. The method of claim **3** further comprising providing using a second probe report, from the second channel assessment node to the network controller, an estimation of the achievable capacity in the assessed channel.

6. The method of claim **1** further comprising using the network controller to select a third channel for assessment.

7. The method of claim **1** wherein said allocating a first probe operation comprises using the network controller to prevent the plurality of nodes from sending information on the network during the first probe operation.

8. The method of claim **1** further comprising using the channel assessment operation node to allocate a second probe operation on each of the selected nodes.

9. The method of claim **1** further comprising identifying, in the Media Access Plan ("MAP"), the channel assessment operation as a link state.

10. A home communication network operable over a plurality of channels, the home communication network comprising:

a network controller;

a plurality of nodes; and

a coax backbone, each of the network controller and the plurality of nodes in communication over the coax backbone, the network controller configured to:

select a channel for assessment;

allocate a first probe operation for use with the plurality of nodes;

wherein each of the plurality of nodes is configured to, in response to the allocating, send a first probe operation report message to the network controller;

wherein, in response to receiving the first probe operation report messages from the plurality of nodes, the network controller is further configured to:

select a node to be a channel assessment operation node;

select at least a portion of the plurality of nodes to participate in a channel assessment operation signal exchange;

move the selected nodes to a different channel to perform a channel assessment operation on the different channel; and

use the channel assessment operation node to allocate a second probe operation on each of the selected nodes.

11. The system of claim **10** wherein, the network controller is further configured to replace the channel assessment node with a second channel assessment node from the plurality of nodes.

12. The system of claim **11** wherein, the second channel assessment node is configured to allocate the second probe operation on each of the selected nodes.

13. The system of claim **12** wherein, the channel assessment node is configured to send a second probe report to the network controller, the second probe report comprising a calculated full mesh rate on the different channel.

14. The system of claim **12** wherein, the second channel assessment node is configured to send a second probe report to the network controller, the second probe report comprising a calculated full mesh rate on the different channel.

15. The system of claim **10** wherein the network controller is further configured to select a third channel for assessment.

16. The system of claim **10** wherein the network controller is further configured to prevent the plurality of nodes from sending information on the network during the first probe operation.

17. The system of claim **10** wherein the channel assessment operation node is further configured to allocate a second probe operation on each of the selected nodes.

18. The system of claim **10** wherein the network controller is further configured to identify, in a Media Access Plan ("MAP"), the channel assessment operation as a link state.

19. A method for assessing channel performance in a home communication network, the home communication network operable over a plurality of channels, the home communication network comprising a network controller and a plurality of nodes, each of the network controller and the plurality of nodes in communication over a first channel over a coax backbone, the method comprising;

selecting a second channel for assessment;

allocating a first probe operation for use with at least one of the plurality of nodes;

allocating a transition time for the at least one node to move to the second channel;

maintaining the ability of the at least one node to continue to transmit on the first channel during the transmission time.

20. The method of claim **19** further comprising, in response to the allocating a first probe operation, sending a first probe operation report message from the at least one node to the network controller.

* * * * *