US 20080291462A1

(19) **United States**

(12) **Patent Application Publication**

(10) **Pub. No.: US 2008/0291462 A1**

(43) **Pub. Date: Nov. 27, 2008**

Katsifolis et al.

(54) **APPARATUS AND METHOD FOR USING A COUNTER-PROPAGATING SIGNAL METHOD FOR LOCATING EVENTS**

(76) Inventors: **Jim Katsifolis**, Northcote (AU); **Lee J. McIntosh**, Stockholm (SE)

Correspondence Address:
MICHAEL BEST & FRIEDRICH LLP
100 E WISCONSIN AVENUE, Suite 3300
MILWAUKEE, WI 53202 (US)

(21) Appl. No.: **12/178,997**

(22) Filed: **Jul. 24, 2008**

Related U.S. Application Data

(63) Continuation of application No. 11/311,009, filed on Dec. 19, 2005.

(30) **Foreign Application Priority Data**

Jan. 11, 2005 (AU) 2005900109

Publication Classification

(51) **Int. Cl.**
G01B 9/02 (2006.01)

(52) **U.S. Cl.** **356/483**

(57) **ABSTRACT**

An apparatus and method for using a counter-propagating signal method for locating events is disclosed. The apparatus and method uses a Mach Zehnder interferometer through which counter-propagating signals can be launched. If the sensing zone of the Mach Zehnder interferometer is disturbed, modified counter-propagating signals are produced, and the time difference between receipt of those signals is used to determine the location of the event. Polarisation controllers receive feedback signals so that the polarisation states of the counter-propagating signals can be controlled to match the amplitude and/or phase of the signals. Detectors are provided for detecting the modified signals.

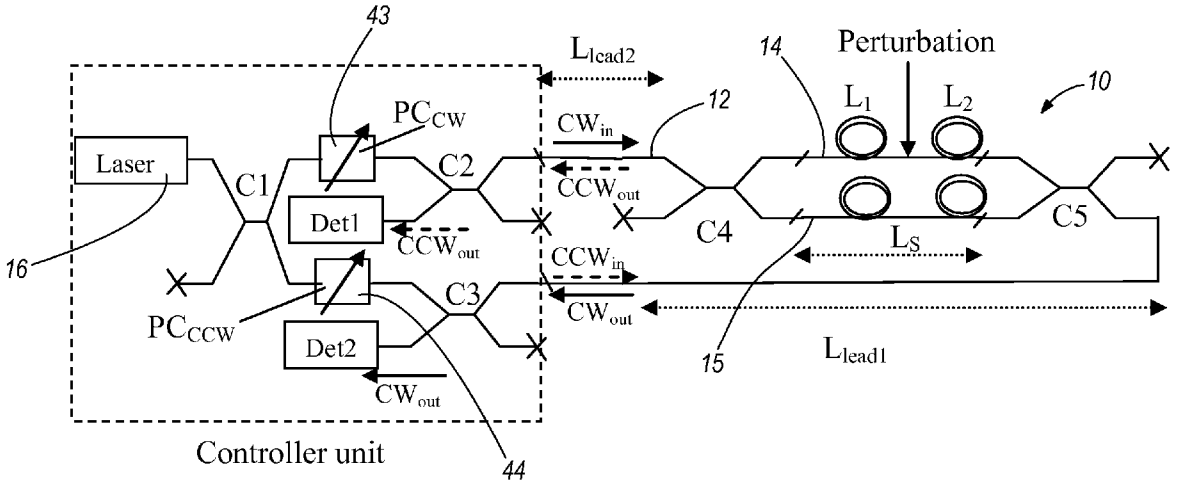

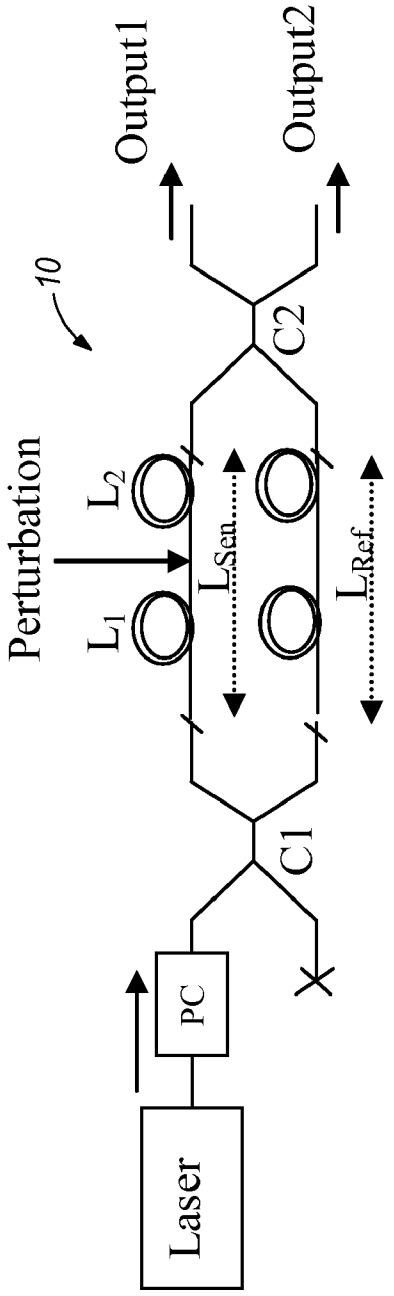

FIG. 1

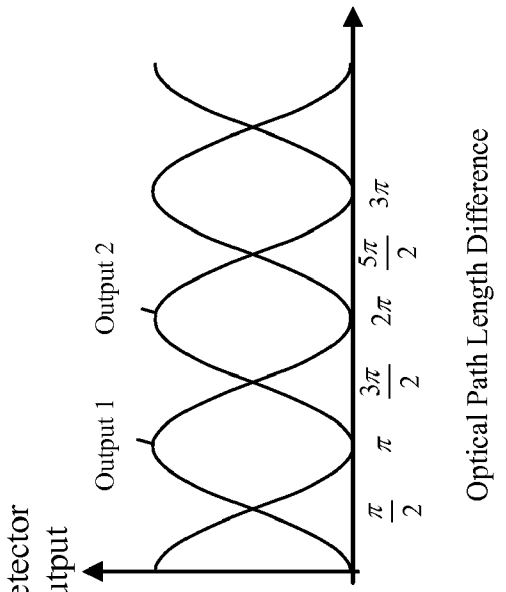

FIG. 3

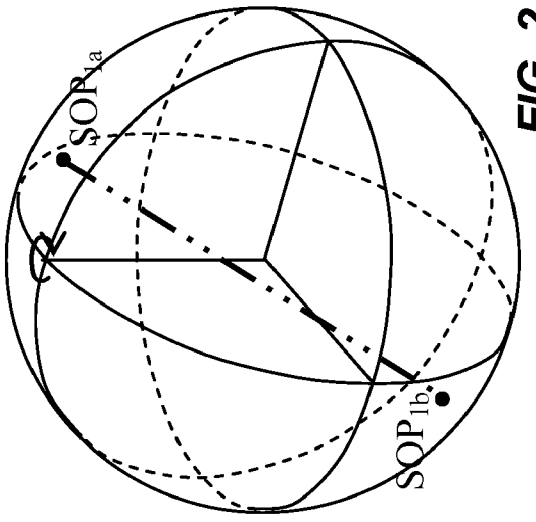

FIG. 2

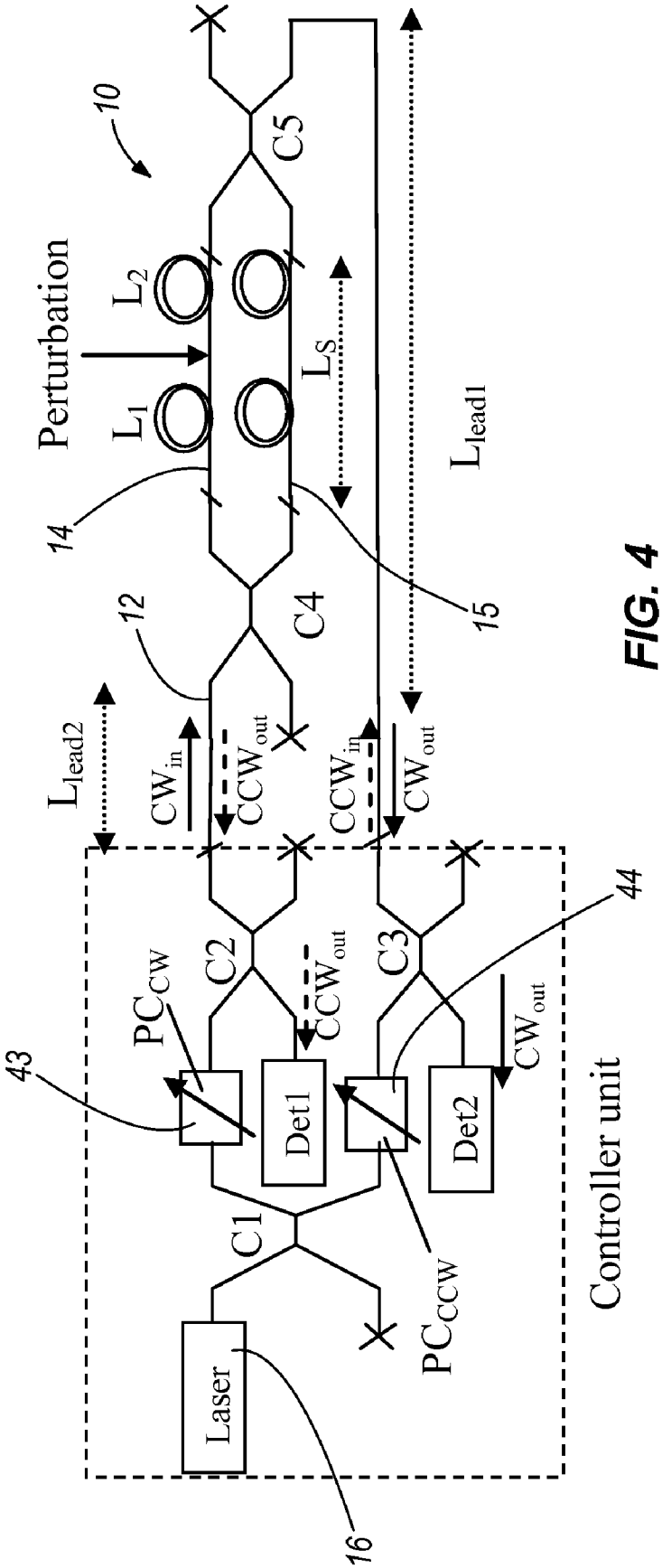
10
Perturbation
L1
L2
LS
Llead1
Llead2
14
15
12
C1
C2
C3
C4
C5
CWin
CCWout
CCWin
CWout
PCCW
PCCCW
Det1
Det2
Laser
43
44
16
Controller unit

FIG. 4

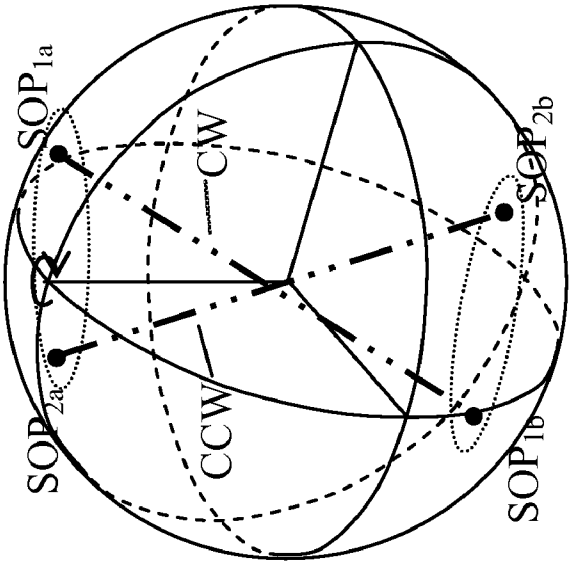

FIG. 5

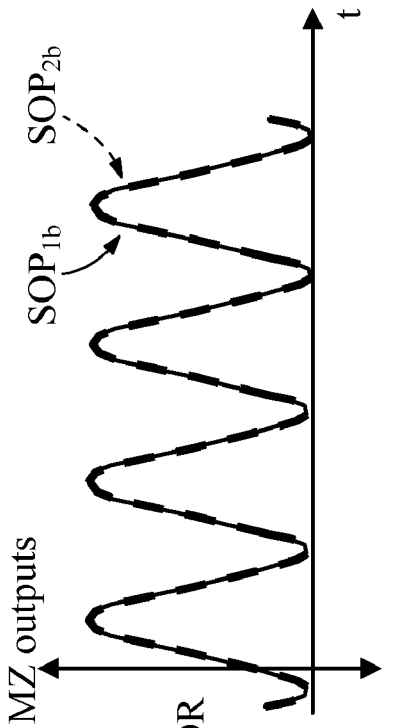

FIG. 6b

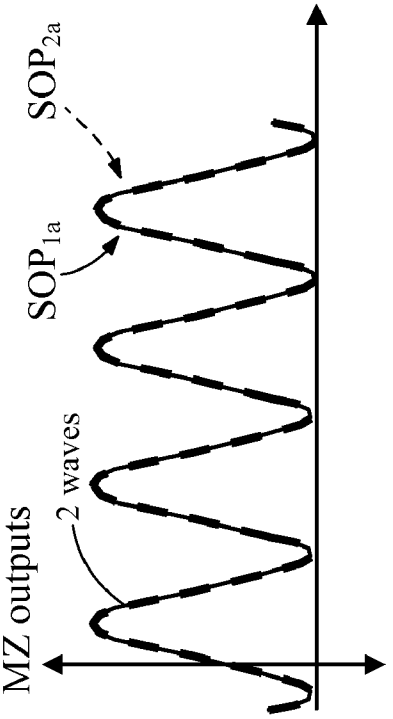

FIG. 6a

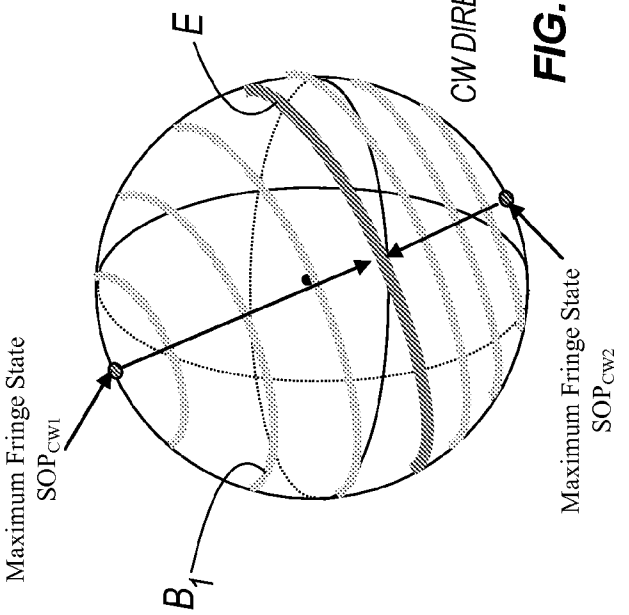

FIG. 8

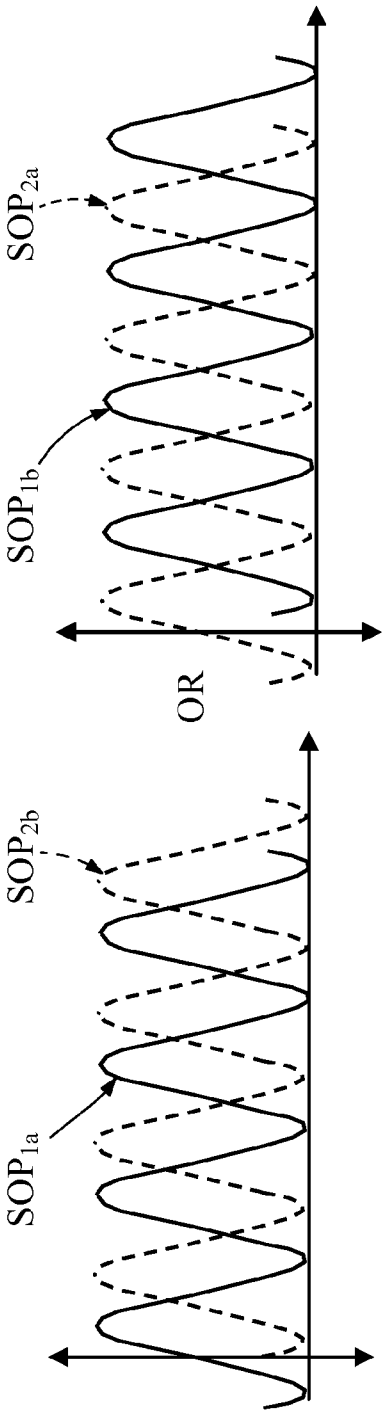

FIG. 7a

FIG. 7b

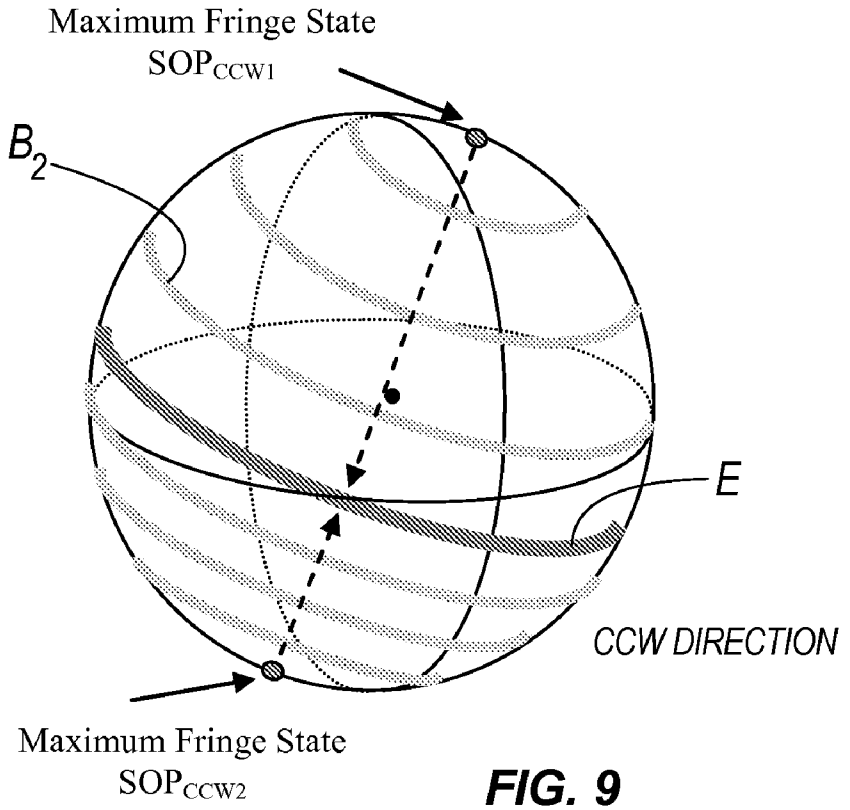
Maximum Fringe State
SOP_{CCW1}
B_2
E
CCW DIRECTION
Maximum Fringe State
SOP_{CCW2}

FIG. 9

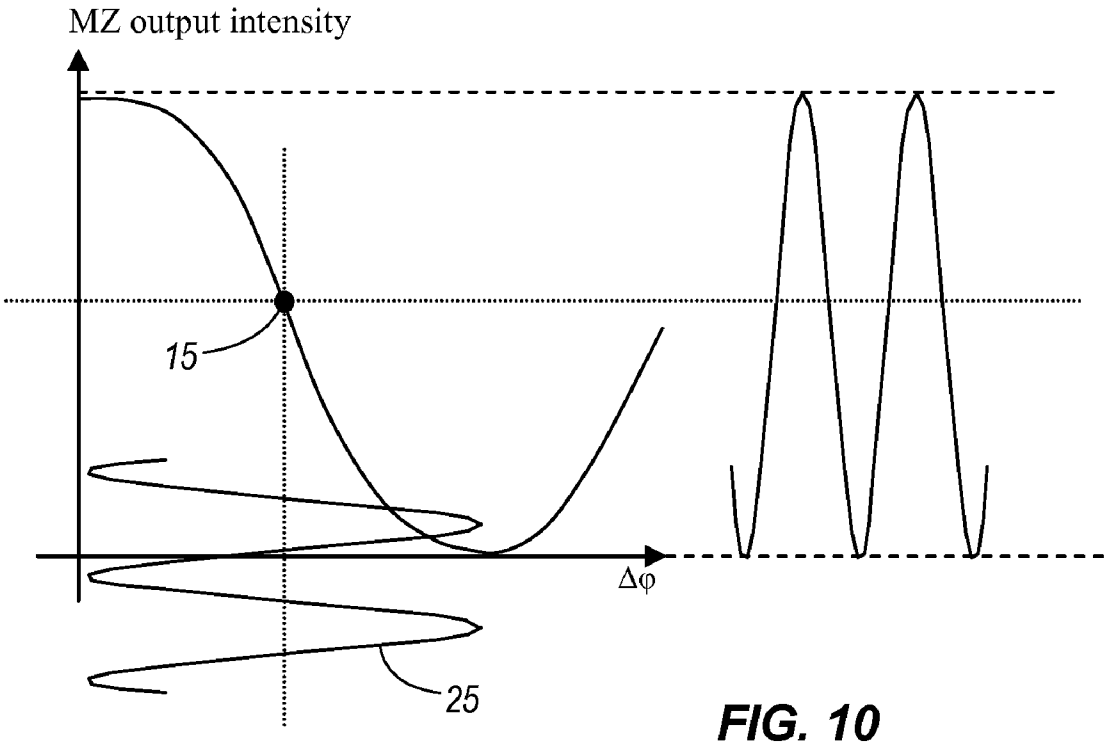
MZ output intensity
15
Δφ
25

FIG. 10

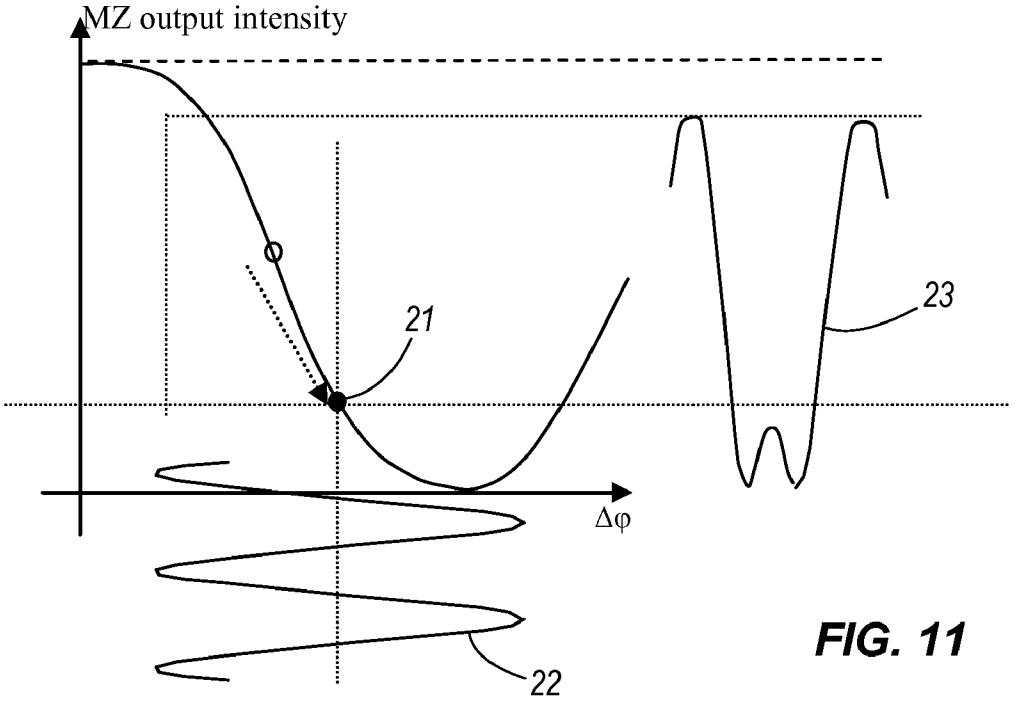

FIG. 11

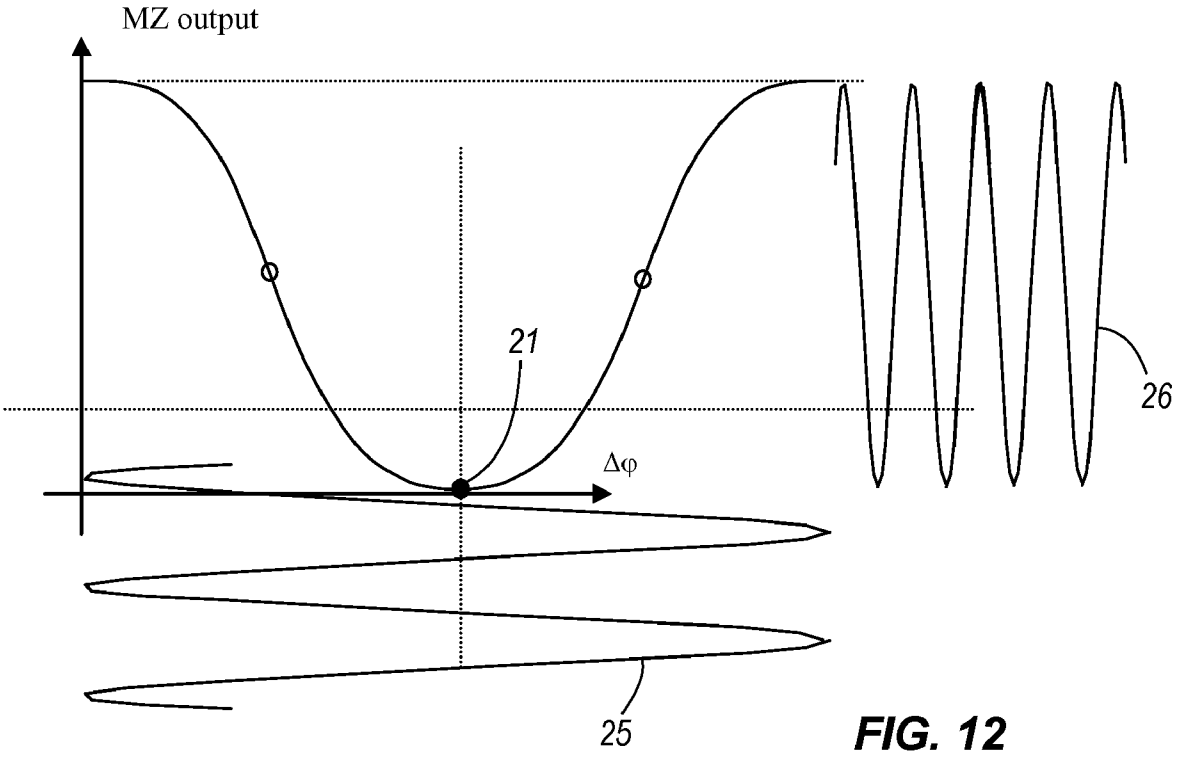

FIG. 12

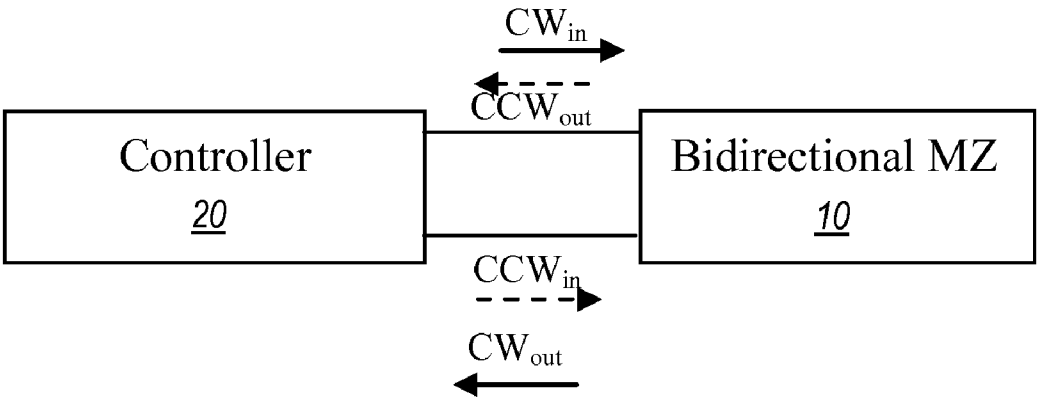
CW$_{in}$
CCW$_{out}$
Controller
20
Bidirectional MZ
10
CCW$_{in}$
CW$_{out}$

FIG. 13

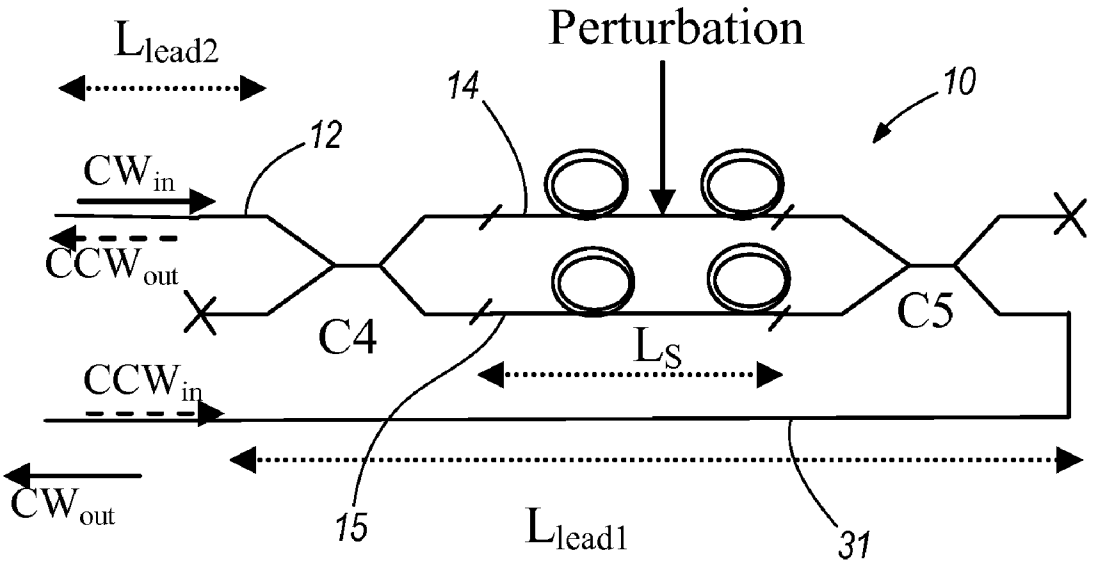
L$_{lead2}$
Perturbation
14
10
12
CW$_{in}$
CCW$_{out}$
C4
C5
L$_S$
CCW$_{in}$
CW$_{out}$
15
L$_{lead1}$
31

FIG. 14

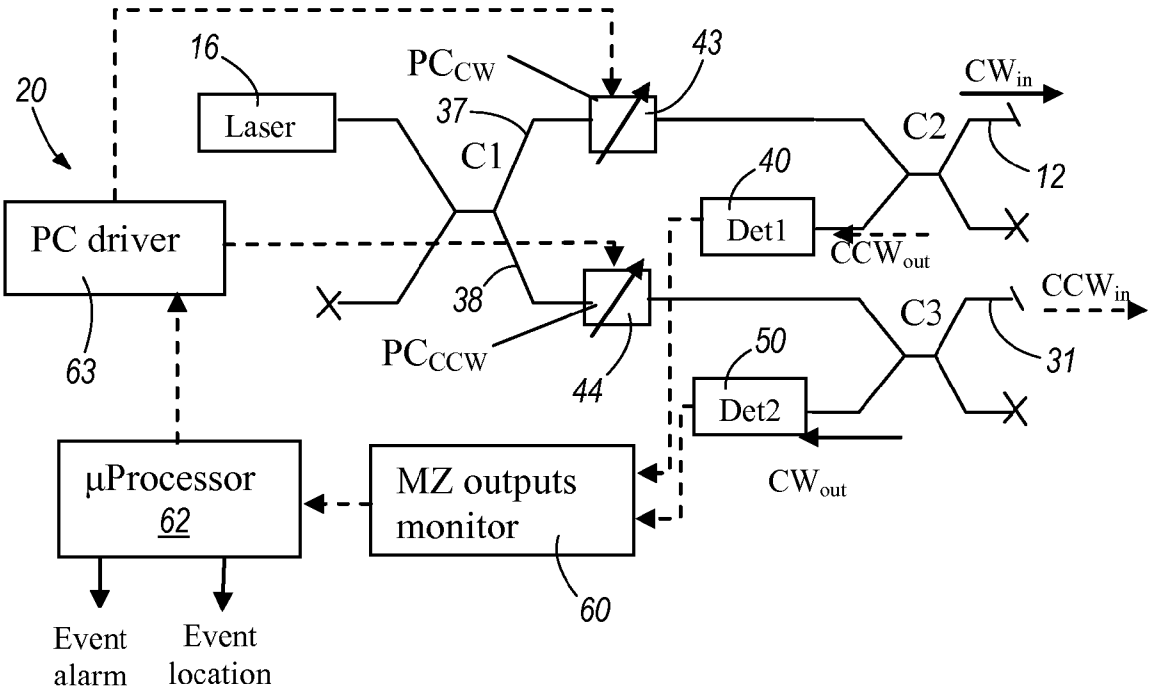
20
16
Laser
PC driver
63
PCCW
37
C1
43
38
PCCCW
44
40
Det1
CCWout
CWin
C2
12
CCWin
C3
31
50
Det2
CWout
µProcessor
62
MZ outputs
monitor
60
Event
alarm
Event
location

FIG. 15

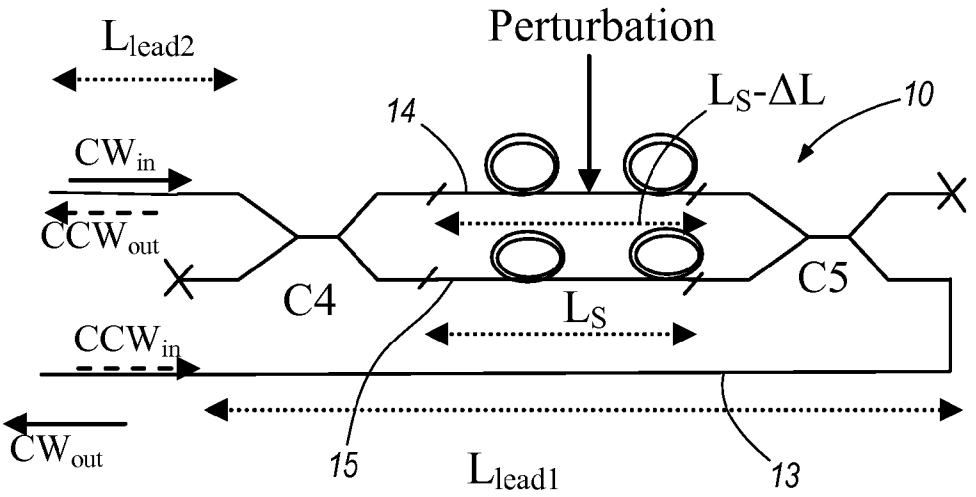
Llead2
Perturbation
LS-ΔL
10
14
CWin
CCWout
C4
C5
LS
CCWin
CWout
15
Llead1
13

FIG. 16

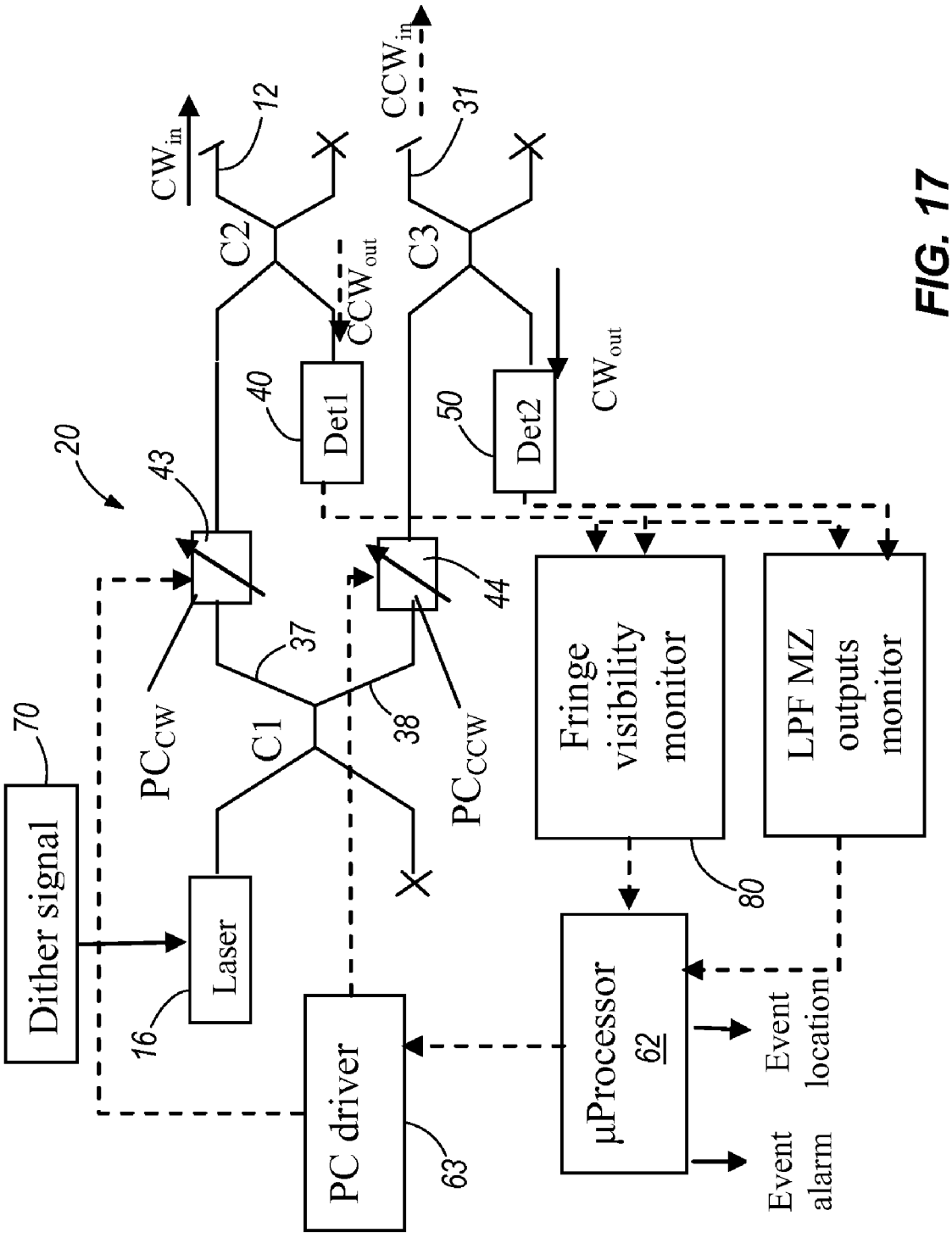
20
Dither signal
70
Laser
16
PC driver
63
C1
37
38
PC_{CW}
PC_{CCW}
43
44
C2
C3
12
31
CW_{in}
CCW_{in}
CCW_{out}
CW_{out}
Det1
40
Det2
50
Fringe visibility monitor
80
LPF MZ outputs monitor
µProcessor
62
Event location
Event alarm

FIG. 17

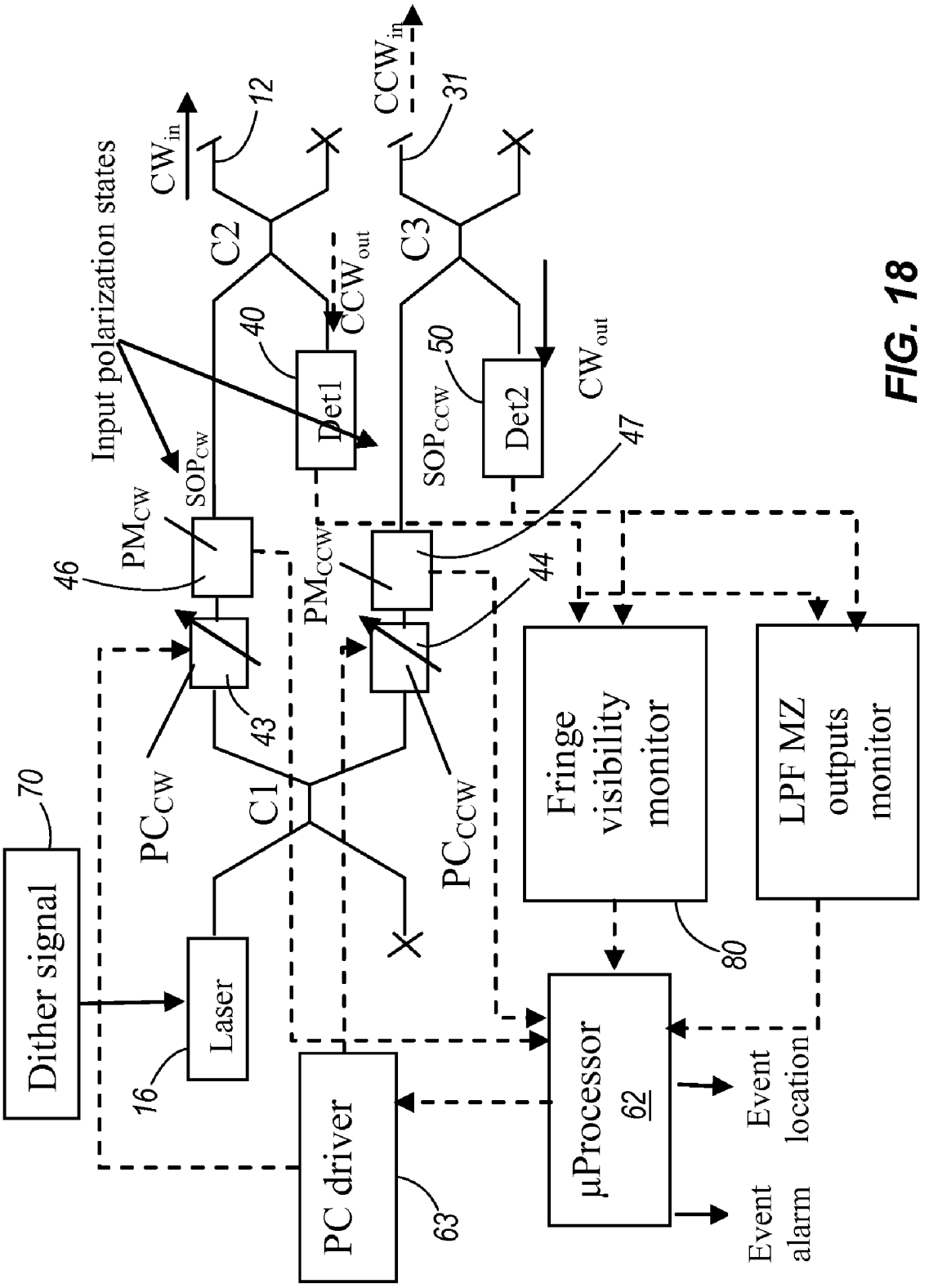
Dither signal
70
Laser
16
PC driver
63
µProcessor
62
Event alarm
Event location
Fringe visibility monitor
80
LPF MZ outputs monitor
PC$_{CW}$
PC$_{CCW}$
C1
43
44
PM$_{CW}$
PM$_{CCW}$
46
47
Input polarization states
SOP$_{CW}$
SOP$_{CCW}$
Det1
Det2
40
50
C2
C3
12
31
CW$_{in}$
CCW$_{in}$
CCW$_{out}$
CW$_{out}$

FIG. 18

APPARATUS AND METHOD FOR USING A COUNTER-PROPAGATING SIGNAL METHOD FOR LOCATING EVENTS

RELATED APPLICATION

[0001] This application is a continuation of copending U.S. patent application Ser. No. 11/311,009, filed Dec. 19, 2005, the entire content of which is incorporated herein by reference.

FIELD OF THE INVENTION

[0002] This invention relates to a method and apparatus for locating events, such as intrusions into a secured premises, or breakdown or other events associated with structures, so that the location of the event can be determined.

BACKGROUND OF THE INVENTION

[0003] Apparatus and method for locating events are disclosed in our U.S. Pat. Nos. 6,621,947 and 6,778,717. The contents of these two patents are incorporated into this specification by this reference.

[0004] The system used in the above-identified U.S. patents utilises a Mach Zehnder (MZ) interferometer in which counter-propagating signals are provided. By measuring the time difference of perturbed signals caused by an event, the location of the event along the sensing device formed by the Mach Zehnder interferometer can be determined.

[0005] Thus, when an event perturbs the MZ sensor portion of the system, the difference in the arrival time of the counter-propagating signals at the detectors can be used to calculate the exact location of the perturbation on the MZ sensor. This type of sensor can be applied to perimeter or infrastructure security applications, with typical sensing lengths exceeding 50 km.

SUMMARY OF THE INVENTION

[0006] The object of the invention is to improve the system and method disclosed in the above-identified patents so that a more exact location of the event can be provided.

[0007] The invention provides an apparatus for detecting and locating disturbances, comprising:

[0008] at least one light source;

[0009] an optical system with at least one optical waveguide, the optical waveguide having at least one detection zone at which a disturbance can occur and affect optical signals from the light source when traveling through the waveguide, in the detection zone, along counter-propagating optical channels;

[0010] at least one beam separator between the light source and the optical system, wherein the beam separator couples at least two beams into the optical waveguide for each of the at least two counter-propagating optical channels;

[0011] at least one polarization controller operable to manage optical properties of said counter-propagating optical channels, the polarization controller adjusting optical properties for at least one of the optical signals when propagating toward the detection zone;

[0012] at least one detector coupled to the optical waveguide and responsive to the optical signals after traversing the detection zone;

[0013] a data processing unit coupled to the detector, the data processing unit being operable to localize a place of the disturbance in the detection zone from a difference between times at which effects of the disturbance appear at the detector; and,

[0014] a feedback control coupled to the optical system and to at least one said polarization controller, wherein the feedback control and the polarization controller are configured to maximize a signal-to-noise ratio and to minimize a polarization contribution to said difference between times, by at least one of: seeking a predetermined relationship between polarization phase transformations along the counter-propagating optical channels, maximizing a peak swing in intensity at a point of interference of the beams, and varying an input state of polarization for one of testing and adjusting a balance between said polarization transformations for the counter-propagating channels.

[0015] The invention also provides a method for detecting and locating disturbances, comprising:

[0016] establishing an optical system including at least one optical waveguide extending along at least one detection zone at which a disturbance can occur, so as to affect optical signals propagating along counter-propagating optical channels from at least one light source to a detector;

[0017] separating from the at least one light source, and coupling into each of the counter-propagating optical channels, at least two beams;

[0018] managing optical properties in the counter-propagating optical channels using a polarization controller to vary optical properties for at least one of the optical signals while propagating toward the detection zone;

[0019] detecting the optical signals after traversing the detection zone and determining a difference between times at which effects of the disturbance appear in the respective counter-propagating channels after traversing said detection zone;

[0020] calculating from said difference between times and localizing in the detection zone a place where the disturbance occurred;

[0021] wherein said managing of the optical properties comprises providing a control signal to the polarization controller that maintains a signal-to-noise ratio and minimizes a contribution to said difference between times caused by polarization effects, including at least one of:

[0022] seeking a predetermined relationship between polarization phase transformations along the counter-propagating optical channels,

[0023] maximizing a peak swing in intensity at a point of interference of the beams, and

[0024] varying an input state of polarization for one of testing and adjusting a balance between said polarization transformations for the counter-propagating channels.

[0025] The invention also provides an improved method for detecting and locating disturbances affecting an optical system including at least one optical waveguide extending along at least one detection zone at which a disturbance can occur, thereby affecting optical signals propagating along counter-propagating optical channels from at least one light source to a detector, wherein at least two beams are separated from the at least one light source and coupled into each of the counter-propagating optical channels, and an effect of the disturbance is detected after the beams have traversed the detection zone and a time difference is determined for calculating a location of the disturbance in the detection zone, wherein the improvement comprises:

[0026] managing optical properties in the counter-propagating optical channels using a polarization controller to vary optical properties for at least one of the optical signals while propagating toward the detection zone, wherein said managing includes providing a control signal to the polarization controller that maintains a signal-to-noise ratio and minimizes a contribution to said difference between times caused by polarization effects, and comprises at least one of

[0027] seeking a predetermined relationship between polarization phase transformations along the counter-propagating optical channels,

[0028] maximizing a peak swing in intensity at a point of interference of the beams, and

[0029] varying an input state of polarization for one of testing and adjusting a balance between said polarization transformations for the counter-propagating channels.

[0030] The invention still further provides an apparatus for locating the position of an event, comprising:

[0031] a light source;

[0032] a waveguide for receiving light from the light source so that the light is caused to propagate in both directions along the waveguide to thereby provide counter-propagating optical signals in the waveguide, the waveguide being capable of having the counter-propagating optical signals or some characteristic of the signals modified or affected by an external parameter caused by or indicative of the event to provide modified counter-propagating optical signals which continue to propagate along the waveguide;

[0033] detector means for detecting the modified counter-propagating optical signals affected by the parameter and for determining the time difference between the receipt of the modified counter-propagating optical signals in order to determine the location of the event;

[0034] a controller for controlling polarisation states of the counter-propagating optical signals so that the signals are amplitude and phase matched; and

[0035] wherein the waveguide comprises a first arm for receiving the counter-propagating signals, and a second arm for receiving the counter-propagating signals, the first and second arms forming a Mach Zehnder interferometer.

[0036] By matching the amplitude and phase of the counter-propagating signals, output fringes at the detector are produced which are easily detected and therefore the time difference between receipt of the two modified counter-propagating detectors can be accurately recorded to thereby accurately determine the location of the event. This also improves the sensitivity of the system and method.

[0037] In the preferred embodiment of the invention, the input polarisation states of the counter-propagating signals are controlled to achieve maximum output fringes. However, in other embodiments, polarisation states which lead to amplitude and phase matched outputs, but with sub-maximum fringe visibilities can also be utilised.

[0038] Preferably the control unit comprises the detector means, a polarisation controller for each of the counter-propagating signals and the light source.

[0039] Preferably the detector means comprises a first detector for one of the counter-propagating signals and a second detector for the other of the counter-propagating signals.

[0040] Preferably the light source comprises a laser light source having bragg gratings and an adjuster for controlling the bragg gratings to thereby alter the wavelength of the light signal output from the laser for producing the counter-propagating signals.

[0041] Preferably the control unit includes a processor for receiving outputs from the detectors and for processing the outputs to indicate an event and to determine the location of the event.

[0042] In one embodiment the processor is coupled to a polarisation control driver and the polarisation control driver is coupled to the polarisation controllers for controlling the controllers to thereby set the polarisation of the signals supplied from the light source to the first and second arms of the Mach Zehnder interferometer to in turn set the polarisation of the counter-propagating signals.

[0043] Preferably the detectors are connected to a Mach Zehnder output monitor for monitoring the counter-propagating signals detected by the detectors so that when the modified counter-propagating detectors are detected by the detector, the MZ output determines detection of those signals by the detectors for processing by the processor.

[0044] In one embodiment of the invention the first arm of the Mach Zehnder interferometer is of different length than the second arm of the Mach Zehnder interferometer so that the first and second arms have a length mismatch, the control unit further comprising a dither signal producing element for controlling the light source to wavelength dither the output from the light source to produce a dither in the phase difference between the MZ arms, in turn which produces artificial fringes at the drifting output of the MZ.

[0045] Preferably the dither signal element dithers the phase difference between the MZ arms by at least 360°, to produce artificial fringes, so that the drifting output of the Mach Zehnder's operating point always displays its true fringe visibility.

[0046] The invention also provides a method of locating an event comprising the steps of:

[0047] launching light into a waveguide so that the light is caused to propagate in both directions along the waveguide to thereby provide counter-propagating optical signals in the waveguide, the waveguide being capable of having the counter-propagating optical signals or some characteristic of the signals modified or affected by an external parameter caused by the event, to provide modified counter-propagating optical signals which continue to propagate along the waveguide; substantially continuously and simultaneously monitoring the modified counter-propagating optical signals, so that when an event occurs, both of the modified counter-propagating optical signals affected by the external parameter are detected;

[0048] determining the time difference between the detection of the modified signals in order to determine the location of the event;

[0049] forming the waveguide as a Mach Zehnder interferometer having a first arm through which the counter-propagating optical signals travel, and a second arm through which the counter-propagating optical signals travel; and

[0050] controlling the polarisation states of the counter-propagating optical signals input into the waveguide to provide amplitude and phase matched counter-propagating signals from the waveguide.

[0051] Preferably the polarisation states of the counter-propagating signals provide amplitude and phase-matched counter-propagating signals from the waveguide which achieve maximum output fringes. However, in other embodi-

ments, the control of the polarisation states may be such that phase matched sub-maximum fringes are provided.

[0052] Preferably the step of controlling the polarisation states comprises randomly changing the input polarisation states of the counter-propagating signals whilst monitoring the counter-propagating optical signals output from the Mach Zehnder interferometer to detect a substantially zero state of intensities, or maximum state of intensities of the counter-propagating signals, and selecting the input polarisations which provide the substantially zero or substantially maximum intensities.

[0053] In one embodiment, fringes for determining the polarisation states are artificially created.

[0054] Preferably the artificially created fringes are created by dithering or modulating the wavelength of the light source and providing a path length mismatch between the first and second arms of the Mach Zehnder interferometer.

[0055] In one embodiment the step of controlling the polarisation states comprises controlling the polarisation controllers to thereby set the input polarisation state of the signals supplied from the light source to each input of the bidirectional Mach Zehnder interferometer to provide phase matched counter-propagating output signals.

[0056] Preferably the wavelength of the laser source is dithered by an amount which leads to the dithering of the phase difference between the MZ arms by 360°, to produce artificial fringes, so that with a drifting operating point, the Mach Zehnder's counterpropagating outputs always display their true fringe visibility.

BRIEF DESCRIPTION OF THE DRAWINGS

[0057] Preferred embodiments will be described, by way of example, with reference to the accompanying drawings, in which:

[0058] FIG. **1** is a diagram of a basic layout of a conventional uni-directional MZ system;

[0059] FIG. **2** is a Poincare sphere illustrating polarisation states which achieve maximum fringe visibility for a conventional unidirectional MZ;

[0060] FIG. **3** is a diagram showing the outputs in FIG. **1** caused by the phase differences between the MZ arms;

[0061] FIG. **4** is a diagram of a system according to preferred embodiments of the invention;

[0062] FIG. **5** is a Poincare sphere diagram relating to the embodiment of FIG. **4**;

[0063] FIG. **6**A and FIG. **6**B are graphs showing maximum fringe visibility outputs according to the embodiment of FIG. **4**;

[0064] FIG. **7**A and FIG. **7**B are illustrative diagrams showing non-phase matched maximum fringe outputs;

[0065] FIG. **8** is a Poincare sphere diagram illustrating various polarisation states of one counter-propagating signal to provide various fringe visibilities according to embodiments of the invention;

[0066] FIG. **9** is a diagram similar to FIG. **8** relating to the other counter-propagating signal;

[0067] FIG. **10** is a graph showing the effect of wavelength dither of the light source on the output of the MZ used in one embodiment of the invention;

[0068] FIG. **11** is a graph showing the effect of a drifting operating point in the MZ output, which drifts in and out of quadrature, on the stimulated fringes produced by the Mach Zehnder interferometer;

[0069] FIG. **12** is a diagram similar to FIG. **11** but showing a 360° dither of the phase difference between the MZ arms for a drifting MZ output;

[0070] FIG. **13** is a block diagram of a first embodiment of the invention;

[0071] FIG. **14** is a diagram of a typical Mach Zehnder interferometer used in the preferred embodiments;

[0072] FIG. **15** is a diagram showing the controller of the embodiment of FIG. **13**;

[0073] FIG. **16** is a schematic view of a second embodiment of the invention;

[0074] FIG. **17** is a block diagram of the controller of the embodiment of FIG. **16**; and

[0075] FIG. **18** is a block diagram of a third embodiment of the invention.

DETAILED DESCRIPTION OF THE PREFERRED EMBODIMENTS

[0076] With reference to FIG. **1**, both outputs of a conventional unidirectional MZ (shown in FIG. **3**), which are complementary, will drift and vary in an approximately sinusoidal fashion with time due to environmental and other effects. The maximum possible amplitude, or fringe visibility, of the intensity of both MZ outputs can be related to the alignment of the polarisation states of the interfering signals in the MZ interferometer arms. It is possible to control the alignment of polarisation states of the interfering signals, and therefore the fringe visibility of a MZ, by controlling the polarisation of the light signal in the input lead fibre. In fact, there are two possible polarisation states at the input lead of the fibre MZ for which the fringe visibility of the outputs of a unidirectional MZ is at a maximum approaching unity. This is shown in FIG. **2** for a unidirectional MZ using a Poincare sphere to illustrate the maximum fringe input polarisation states.

[0077] As shown in FIG. **2**, there exist two unique polarisation states at the input of the MZ **10**, for which either output of the conventional unidirectional MZ will have a maximum fringe visibility. When plotted on the Poincare sphere, these two polarisation states are diametrically opposed.

[0078] With reference to FIG. **4**, the inventors have shown experimentally that the bidirectional MZ **10** can be treated as two separate unidirectional MZs, one for each direction of propagation. However, the two counter-propagating MZs are not completely independent, and do share an important polarisation related behaviour.

[0079] The counterpropagating outputs of the bi-directional MZ will also drift and vary in the same fashion. For each direction, there will also be two input polarisation states for which the MZ outputs will achieve a maximum output fringe. Although the choice of either one of these input polarisation states achieves a maximum output fringe, and thus a maximum sensitivity for a conventional MZ, in the case of a bidirectional MZ used to locate events, the choice of input polarisation state for each direction carries an important significance. For this discussion, it will be assumed that only one MZ output for each direction is used (CW_{out} and CCW_{out})

[0080] Given that there are two possible input polarisation states for each direction which achieves maximum fringe visibility, then there are four possible pairings of counter-propagating input polarisation states which will simultaneously achieve maximum output fringe visibilities for both directions.

[0081] The bi-directional MZ **10** shown in FIG. **4** includes a coupler C**4** to incorporate a fibre lead-in length **12** to the MZ sensor, L_{lead2}. This is one practical way to set up the system as it allows for encapsulation of the optoelectronics and associated optical components in one controller unit **20**. Also included are two polarisation controllers, PC_{cw} **43** and PC_{cw} **44**, which can be used to control the input polarisation state to the MZ **10** for the CW (clockwise) and CCW (counter-clockwise) directions, respectively. Controlling the input polarisation state in the lead fibre of a MZ can achieve maximum output fringes. This can be applied independently to both directions on the bidirectional MZ **10** in order to simultaneously achieve maximum output fringes for both directions. Various multiple-plate, voltage controlled polarisation controllers can be used to control the input polarisation state, and can include liquid crystal based polarisation controllers or piezo-based polarisation controllers.

[0082] For the CW propagation direction there are the two possible input polarisation states which give maximum output fringes—SOP_{1a} and SOP_{1b}. Equally, for the CCW propagation direction, the two possible input polarisation states which give maximum output fringes are SOP_{2a} and SOP_{2b}. These polarisation states, can be represented on a Poincare sphere as shown in FIG. **5**.

[0083] Although there are 4 possible pairings which will simultaneously lead to maximum fringes at both counter-propagating outputs CW_{out} and CCW_{out} of the bidirectional MZ (SOP_{1a} and SOP_{2b} or SOP_{1a} and SOP_{2b}, or SOP_{1b} and SOP_{2a}, or SOP_{1b} and SOP_{2b}), only two of these pairings will lead to the outputs that have both maximum fringe visibility and are exactly matched in phase.

[0084] For the example shown in FIG. **4**, the phase matched maximum fringe counter-propagating input polarisation states are: (SOP_{1a} and SOP_{2a}), and (SOP_{1b} and SOP_{2b}). This is shown in the FIGS. **6**A and **6**B.

[0085] FIGS. **6**A and **6**B show two waves which are completely overlapped, namely SOP_{1a} and SOP_{2a} in FIG. **6**A, and SOP_{1b} and SOP_{2b} in FIG. **6**B.

[0086] This phase and amplitude matching condition is important for the Locator system, as it will allow for the most accurate location of events on the sensing cable to be determined. This means that it is essential that there is no time difference between the counter-propagating drifting MZ output signals when the MZ sensor is in the rest state (no disturbance). If the counter-propagating outputs are not matched in phase, then this will lead to the introduction of an error in the time difference calculation and thus the calculation of the location.

[0087] FIGS. **7**A and **7**B show the counter-propagating MZ outputs for the non phase matched maximum fringe counter-propagating input polarisation states, namely SOP_{1a} and SOP_{2b} in FIG. **7**A, and SOP_{1b} and SOP_{2a} in FIG. **7**B.

[0088] The achievement of counter-propagating, phase-matched maximum fringe outputs leads to two important results with respect to the system. It allows for accurate locating of events, as well as maximum sensitivity of the bi-directional MZ.

[0089] However, input polarisation states which lead to amplitude and phase matched counter-propagating outputs are not limited only to the input polarisation states which achieve maximum output fringes. There is also a plurality of other input polarisation state pairs which also lead to amplitude and phase matched outputs, but with sub-maximum fringe visibilities. For example, it is possible to adjust both polarisation controllers **43** and **44** such that the fringe visibility of both outputs is identical and less than the theoretical maximum of 100%, but phase matched. Although a reduction in fringe visibility will lead to a reduction in sensitivity of the bidirectional MZ **10**, as long as the fringe visibility is kept relatively high (for example >75%), it is still possible for the system to calculate accurate locations whilst maintaining an acceptable level of sensitivity. The variation in fringe visibility of the MZ output for each direction in the bi-directional MZ can be plotted on a Poincare sphere to show the relationship between input polarisation states and MZ output fringe visibility. A typical response is shown in FIGS. **8** and **9**.

[0090] The two unique input polarisation states which lead to a maximum fringe visibility form two opposite 'poles' on the sphere, SOP_{cw1} and SOP_{cw2} (FIG. **8**). For non-maximum fringe visibilities, polarisation states of equal fringe visibility form latitudinal belts, with the equatorial belt E representing the polarisation states of minimum fringe visibility. Moving away from the poles, towards the equatorial belt, say B_1 and B_2, which is midway between the two poles, the fringe visibility decreases and becomes a minimum at the equatorial belt E. Both "hemispheres" are essentially mirror images of each other.

[0091] The position of opposing maximum fringe visibility poles, and therefore the latitudinal and equatorial belts, will vary according to the birefringence of the bi-directional MZ system, namely the input lead **12** and MZ arms **14** and **15** for the CW direction. This can be thought of as a rotation of the fringe visibility poles and latitudinal belts around the sphere. The minimum fringe visibility is not necessarily always zero, as would be expected in an ideal MZ **10**, but can be non-zero. The actual value of the minimum fringe visibility will also vary with the birefringence of the MZ system **10** for that direction. So in summary, a change in birefringence in the MZ system **10**, which for the CW direction can include a change in the birefringence in the input lead length **12**, and/or MZ sensor arms **14** and **15**, can cause not only the fringe visibility poles and latitudinal belts to rotate for each direction, but can also change the range of fringe visibilities possible. Importantly, though, the maximum fringe visibility always approaches unity, irrespective of the birefringence of the MZ system.

[0092] Looking at the CCW direction of propagation (shown in FIG. **9**) in the bi-directional MZ **10**, a similar relationship between the fringe visibility of the MZ output **1**, **2** and input polarisation states can be seen. The position of opposing maximum fringe visibility poles, and therefore the latitudinal and equatorial belts, will vary according to the birefringence of the bi-directional MZ system, which includes the input lead (L_{lead1} and MZ arms **14** and **15**. In fact, the minimum and maximum fringe visibility values are the same as for the CW direction for any given time, only the absolute position of the maximum fringe visibility states, SOP_{ccw1} and SOP_{ccw2} is different when compared with the CW direction.

[0093] The optical fibre cables that make up the apparatus of the preferred embodiments are actually installed in a variety of environments where they will be subjected to fluctuating and random conditions such as wind, rain, mechanical vibrations, stress and strain, and temperature variations. As mentioned earlier, these effects can vary the birefringence of the optical fibre in the cables, which in turn can change the fringe visibilities of both Locator MZ outputs through the polarisation induced fringe fading (PIFF) effect. So, in a

realistic installation, where environmental factors will cause random birefringence changes along the fibres of the Locator system, the fringe visibilities of the respective MZ output intensities can vary randomly with time.

[0094] In the apparatus of the preferred embodiments, it is necessary to search and find the input polarisation states for the CW and CCW directions of the bidirectional MZ **10** which correspond to both MZ outputs having the same fringe visibility and being phase matched. One way this could be done is by monitoring the two Locator MZ outputs whilst scrambling the polarisation controllers. A number of scrambling algorithms could be used as long as they achieve the coverage of most of the possible input polarisation states in a relatively short time.

[0095] Once these input polarisation states are found, they need to be set to achieve amplitude and phase matched MZ output intensities. To keep the MZ outputs in the amplitude and phase matched condition, it is also necessary to continue adjusting the input polarisation states to compensate for any PIFF that may lead to non-matching counter propagating fringe visibilities, and therefore non-phase matched MZ outputs. This requires knowledge of the actual fringe visibility of the counter-propagating outputs of the bidirectional MZ.

[0096] For an apparatus which is using a CW laser as its source, it is not possible to continuously monitor the fringe visibilities of the two MZ outputs, especially in the absence of disturbances. This is because the time taken for the MZ output intensities to go through a full fringe amplitude excursion will vary with time and will be a function of the random phase fluctuations in both arms **14** and **15** of the MZ **10**, as well as the PIFF due to the random birefringence changes in the fibres along the length of the bidirectional MZ system.

[0097] However, it is possible to determine that a maximum fringe state exists for either of the MZ output intensities if they move through or very close to a zero or maximum intensity level. This is because the zero or maximum level intensities are unique to a maximum fringe visibility. So, for a bidirectional MZ system with polarisation controllers at the inputs of the bi-directional MZ, as shown in FIG. **4**, one method for determining the required input polarisation states, which are associated with the phase matched maximum MZ output fringe visibilities, is to use a polarisation scrambling technique to randomly change the input polarisation state whilst simultaneously monitoring the MZ outputs. When the MZ output intensities reach a zero (or near-zero), or maximum level, then the corresponding input polarisations can be used to set the MZ output intensities to maximum fringe visibilities.

[0098] Given that there are 2 possible input polarisation states that simultaneously give a maximum fringe visibility for each direction in the bidirectional MZ, and that only two out of the 4 possible pairings of counter-propagating input polarisation states will give phase matched MZ outputs, it is necessary to check that the chosen two polarisation states yield phase matched MZ outputs. This can be done by simply monitoring the MZ outputs for a predetermined time. If they are not in phase, then polarisation scrambling can be used to find two input polarisation states, and their corresponding maximum fringe outputs, to continue to search for phase matching.

[0099] Once the phase matched maximum fringe states are found and set, a tracking algorithm can be used to continue to keep the MZ outputs in a phase matched condition by adjusting the voltage drives to the individual plates of both polarisation controllers accordingly.

[0100] This technique will be described in detail with reference to FIGS. **14** and **15**. One of the drawbacks of using this technique is that even though we are continuously monitoring the MZ outputs, we are not continuously monitoring the output fringe visibilities of the MZ outputs. To detect a maximum fringe, it is necessary to wait until the MZ output intensity goes to, or very near, a zero or maximum intensity level. Since the MZ outputs will randomly vary in speed and amplitude, the time taken for which a maximum output fringe can be detected for either of the MZ outputs will vary. Another draw back is that if the MZ output is at a maximum fringe state but is not at a zero or maximum intensity level, it is not possible to detect this situation using only this technique.

[0101] A more direct technique would involve continuously monitoring the fringe visibilities of the MZ outputs. This requires that fringes are created artificially in the system.

[0102] Fringes can be artificially created in the MZ **10** by using a transducer in one of the sensing arms to modulate the phase of the light propagating through the fibre. However, for an event location system where it is preferable that the sensing cables are totally passive, this is not a practical solution.

[0103] Another technique for stimulating fringes in a fibre MZ is to modulate or dither the wavelength of the laser source **16**. As long as there is a path length mismatch between the MZ arms **14** and **15**, then the modulation in optical wavelength (which can also be expressed as an optical frequency) will lead to the creation of fringes. This comes about due to the wavelength dependent phase difference between the MZ arms caused by the path length mismatch. For a Mach Zehnder **10** with a path length mismatch ΔL, the phase difference $\Delta\phi$ between the arms can be expressed by:

$$\Delta\phi = \frac{2\pi \cdot n_{co} \cdot \Delta L \cdot \Delta v}{c}$$

[0104] where n_{co} is the refractive index of the fibre core, c is the speed of light in a vacuum, and Δv is the laser's optical frequency change. In the case of a bidirectional MZ, as is described in FIG. **4**, the phase difference $\Delta\phi$ between the arms of the MZ will be the same for each direction of propagation. It should be noted that the phase difference referred to here is additional to the phase difference between the arms which is induced by a perturbation event on the MZ sensor.

[0105] For a MZ whose operating point is at quadrature, a full fringe excursion can be achieved for a given path length mismatch by modulating the laser source's frequency/wavelength by an amount which results in $\Delta\phi=\pi^c$. For a typical fibre core index $n_{co}=1.46$, a path length mismatch $\Delta L=1$ m, and a full fringe $\Delta\phi=\pi^c$, will give an optical frequency dither of

$$\Delta v = \frac{c \cdot \Delta\phi}{2\pi \cdot n_{co} \cdot \Delta L} = \frac{3\times10^8 \cdot \pi}{2\pi \cdot 1.46 \cdot 1} = 102.75 \text{ MHz}$$

[0106] For a centre wavelength of 1550 nm, this corresponds to a wavelength dither of ~0.8 μm.

[0107] One of the simplest ways to modulate the wavelength of a standard laser diode is to modulate the drive

current to the laser. These types of lasers however do not normally have a high enough coherence to be suitable for the applications discussed herein.

[0108] The pumped fibre laser source **16** requires a mechanical modulation of the fibre laser's cavity, or fibre Bragg gratings to achieve wavelength modulation. This can be achieved by using either a temperature tuning approach, or a mechanical piezo tuning approach using a piezo transducer (PZT). Since temperature tuning is very slow, the piezo tuning method is more suited to such a laser in order to achieve the wavelength dithering or modulation.

[0109] In order to use the dithering of the laser wavelength to continuously monitor the fringe visibility of the MZ, it is necessary to create at least 2 full artificial fringes per cycle of PZT modulation. This requirement is determined by the fact that, as mentioned earlier, the operating point of the MZ drifts in and out of quadrature with time, and the creation of only one full fringe, that is, $\Delta\phi=180°$, would not be sufficient to continuously show the true fringe visibility. This is illustrated in FIG. **11**.

[0110] FIG. **10** shows that for a static MZ output operating point which is exactly at quadrature, applying a sinusoidal phase ($\Delta\phi$) modulation with an 180° excursion will lead to a full fringe per cycle of phase modulation. In other words, the fringe visibility can be continuously monitored. It should be noted that since the transfer function of the MZ is a raised cosine and it is being modulated about the quadrature point with a sinusoidal signal, the resulting stimulated fringes will additionally contain harmonics of the fundamental modulating frequency.

[0111] However, in a real MZ **10**, the MZ's output operating point drifts in and out of quadrature. This is illustrated in FIG. **11**.

[0112] If, however, the dithering is used to achieve at least 360° of phase modulation at all times, the true fringe visibility of the stimulated fringes can be continuously monitored, irrespective of the drift of the MZ output's operating point. This is illustrated in FIG. **12**.

[0113] If a 360° phase modulation (or more) is used, that is 2 fringes per cycle of modulation are stimulated, this will ensure that the true fringe visibility will always be measurable, irrespective of the drift in the MZ output. This will essentially produce higher harmonics in the stimulated fringes. As the MZ output operating point drifts to the left or the right of quadrature, it will cause higher harmonics of the dither frequency (2nd, 3rd, 4th, etc.) together with the fundamental dither frequency to be present in the stimulated fringes.

[0114] To make sure that the stimulated fringes do not interfere with the fringes created by the events which are to be sensed by the apparatus, it is important for the frequency of the stimulated fringes to be in a frequency range well outside that of the event signals detected by the apparatus. For example, in a typical installation, where the frequency range of interest may be 0-20 kHz, the fundamental frequency of the stimulated fringes should be higher, e.g. 50 kHz.

[0115] FIG. **11** shows that with the drifting MZ output operating point **21** and the phase dither **22** shown in FIG. **11**, a stimulated full range fringe **23** will not be achieved due to the drifting. FIG. **12** shows that by using a full 360° dither **25**, true fringe visibility **26** is always present in stimulated fringes, irrespective of the drifting operating point **21**. There will also be frequency doubling for the 360° phase modulation for this case. In FIG. **10**, the static operating point **15** which is at quadrature and the phase dither **25** always produces the stimulated full fringe **26** shown in FIG. **10**. In FIGS. **10** to **12**, the phase dither is at a frequency of about 40 kHz. The frequency of the fringes **26** in FIG. **10** is 40 kHz. In FIG. **11** the onset of frequency doubling can be seen in **23**, whilst the output fringes in FIG. **12** will include even harmonics of the fundamental frequency, not excluding the fundamental dither frequency. Generally speaking, the output fringes will include a proportion of odd and even harmonics of the fundamental dither frequency. The amplitude of the odd and even harmonic frequencies at any given time will depend on exactly where the drifting MZ output's operating point is at any given time.

[0116] FIG. **13** is a schematic block diagram of a first embodiment of the invention in which the controller **20** is separated from the Mach Zehnder interferometer which forms the sensing system of the various embodiments. FIG. **14** shows the bi-directional MZ **10** and includes the lead-in fibre **12** as previously described. The lead-in fibre connects with a coupler C**4** so that a first signal is launched into arm **14** of the Mach Zehnder **10** and a second signal is launched into arm **15** of the Mach Zehnder **10**. The Mach Zehnder interferometer **10** has a sensing length of L_s which may typically be several or more kilometers. The arms **14** and **15** are connected to a further coupler C**5** so that the signal launched into the arms **14** and **15**, whose signals recombine at C**5**, is received in fibre **31** as an output signal CW out. Simultaneously, a counter-propagating signal is received in the fibre **31** which in turn travels to coupler C**5** and then launches into arms **14** and **15** so that the two signals recombine at C**4** and exit coupler C**4** at lead-in line **12**. Thus, counter-propagating signals are received in both arms **14** and **15**. The output propagating signal received in fibre **12** passes through coupler C**2** to a first detector **40** and the other counter-propagating signal passes through the fibre **31** and through a coupler C**3** to a second detector **50**. Thus, if there is a perturbation, as shown in FIG. **14**, at part of the sensing length L_s of the Mach Zehnder **10**, then modified counter-propagating signals continue to propagate through the sensing arms **14** and **15** back to the respective detectors **40** and **50**. The time difference between receipt of the modified counter-propagating signals are provided from the detectors **40** and **50** to output monitor **60** and then to processor **62** which form the detecting unit of the preferred embodiment so that the event can be recognised and the event location determined by the time difference between receipt of the modified counter-propagating signals detected by the detectors **40** and **50**.

[0117] As is shown in FIG. **15**, the controller **20** includes the wholly coherent laser **16** which produces a light output signal which is split into two by coupler C**1**. The split signals are then passed to polarisation controllers PC_{cw} and PC_{ccw} via fibres **37** and **38**. The polarisation controllers are respectively connected to couplers C**2** and C**3** so that the counter-propagating signals are launched into the Mach Zehnder interferometer **10** as previously described. The polarisation controllers control the input polarisation states of the signals which are input into the arms **14** and **15**.

[0118] To find the input polarisation states which produce matched outputs at the detectors **40** and **50**, the polarisation controllers **43** and **44** can be scrambled to randomly change the input polarisation states such that as many different states as possible are covered in as short a time as possible. By continuously monitoring the outputs at the detectors **40** and **50**, the polarisation states corresponding to the outputs pass-

ing a zero or near zero level, or maximum are stored in the microprocessor **62**. When the output reaches a zero or maximum level, the corresponding input polarisation state is considered to be such that it achieves a maximum fringe visibility for that output. When a suitable number of input polarisation states are stored, the scrambling is stopped. The outputs from the arms **14** and **15** and received by the detectors **40** and **50** are then compared for combinations of input polarisation states and the degree of phase matching between the counter-propagating outputs is determined. When the degree of phase matching is above a predetermined acceptable level, the corresponding input polarisation states for which the degree of phase matching was acceptable are set to maintain the phase matched outputs detected by the detectors **40** and **50**. If an acceptable degree of phase matching is not reached, the scrambling and comparing procedure described above is repeated again until acceptable degrees of phase matching is achieved.

[0119] The polarisation controllers **43** and **44** are driven by PC driver **60** so as to continuously change the polarisation of the signals in the fibres **37** and **38** and therefore provided to the couplers C**2** and C**3** as the counter-propagating inputs to the arms **14** and **15**.

[0120] When the required input polarisation states which achieve phase matched maximum fringe visibility at the outputs detected by the detectors **40** and **50** are found, these required input polarisation states are set and the outputs detected by the detectors **40** and **50** are continuously monitored and the micro-processor **62** adjusts the polarisation controllers via the PC driver **63** to maintain the phase matched condition.

[0121] The output monitor **60** determines an event by passing the signals detected by the detectors **40** and **50** through a band pass filter having for example a bandwidth of from 1 kHz to 20 kHz (which is the expected frequency of an actual event or perturbation to the apparatus which needs to be detected). The arrival of modified propagating signals within this bandwidth and the time difference between receipt of the counter-propagating signals enables the event to be recognised and also the location of the event to be determined.

[0122] Thus, the band pass filtered signals are provided from the monitor **60** to the processor **62** for determining the location of the event.

[0123] In order to set the polarisation states, the complete output signal from the detectors **40** and **50** relating to both counter-propagating signals is received at the monitor **60**. This is essentially the raw signal from both detectors **40** and **50** and that signal is low pass filtered and used to search for maximum fringes during the polarisation scrambling by detecting zero or maximum intensity levels. When the maximum fringes have been located, the processor **62** also checks for phase alignment. When the desired polarisation states are controlled, these are continuously fed to the PC driver and in turn, the PC driver drives the polarisation controllers **43** and **44** to maintain those polarisation states during use of the system. Monitoring can be performed continuously or intermittently to ensure that the required polarisation states are maintained.

[0124] FIG. **16** shows a second embodiment of the invention. This embodiment is similar to that shown in FIG. **14**, except the Mach Zehnder interferometer **10** has a path length mismatch of ΔL between the arms **14** and **15** so that one of the arms **14** has a length L_s-ΔL and the arm **15** has a length L_s. The path length mismatch is required to achieve stimulation of artificial fringes by dithering the wavelength of the laser source **16**. One input of the coupler C**4** is used as the clockwise input to the Mach Zehnder **10** and the other input of the coupler C**4** is not used as in the earlier embodiment. Similarly, one of the inputs of the coupler C**5** is connected to fibre **13** and provides the input for the counter-propagating signal and the other arm of the coupler C**5** is also not used.

[0125] FIG. **17** is a view of the controller **20** according to this embodiment of the invention in which like reference numerals indicate like components to those described with reference to FIG. **15**.

[0126] In this embodiment the laser **16** is a diode pumped bragg grating base doped fibre laser. To dither the wavelength of the laser **16**, a piezoelectric transducer (not shown) is used, for example, on the internal bragg gratings in the fibre laser to modulate the output wavelength of the laser **16**.

[0127] To create the artificial fringes, a dither signal which has a frequency above the event frequency of the perturbations which are expected to be provided to the Mach Zehnder **10** and sensed by the Mach Zehnder **10** is applied to the laser **16** from dither signal source **70**. This dithers the wavelength of the laser and effectively creates fringes whose frequency consists of the dither frequency and harmonics of the dither frequency (as has been described in detail with reference to FIGS. **10** to **12**).

[0128] By using the suitable path length mismatch ΔL previously described and adjusting the amplitude of the dithering, continuous fringes are created at the outputs of the Mach Zehnder **10** and which are supplied to the detectors **40** and **50**. The outputs which are received by the detectors **40** and **50** will be composed of the dither frequency as well as harmonics of the dither frequency. A fringe visibility monitor **80** is connected to the detectors **40** and **50** for detecting the artificial fringes and determining the fringe visibility for each direction. The frequency range of the artificial fringes is above the event signal frequency range caused by a perturbation. Microprocessor **62** uses a suitable control algorithm, such as a simulated annealing control algorithm, to search and adjust the input polarisation controllers PC_{cw} and PC_{ccw} via driver **60** so that the stimulated artificial fringes are at a maximum visibility. The phase matching between the stimulated fringes is also detected by the microprocessor **62** and again, once a suitable input polarisation state from each of the controllers is achieved, that polarisation state is set. A control algorithm is used to adjust the input polarisation controllers PC_{cw} and PC_{ccw} to counteract any PIFF, so that the phase matched maximum fringe visibility condition is maintained.

[0129] FIG. **18** shows a still further embodiment of the invention. Once again, like reference numerals indicate like parts to those previously described. The embodiment of FIG. **18** is a modification to the embodiment of FIG. **17** previously described. Once again, the output wavelength of the laser **16** is dithered in the manner described above. Once again, the input polarisation states of the counter-propagating signals supplied to the fibres **12** and **31** are controlled by polarisation controllers **43** and **44** respectively. The controllers **43** and **44** are connected to polarimeters **46** and **47** which respectively measure the polarisation state of the outputs from the polarisation controllers **43** and **44**. The input light signals having the polarisation states are then supplied to the fibres **12** and **31** via the couplers C**2** and C**3** in the same manner as previously described. The polarimeters **46** and **47** allow the fringe visibility of the outputs from the controllers **43** and **44** to be related to their respective input polarisation states. The pola-

rimeters **46** and **47** also allow for the capability of moving from one input polarisation state to another for both directions of propagation in a deterministic way, should that be desired. This essentially allows the implementation of a polarisation control strategy which can quickly identify where on the sphere the current input polarisation state is with respect to the two maximum fringe visibility SOP states for each direction of propagation, as well as how to change the polarisation controllers such that it is possible to find and maintain the input polarisation states SOP_{cw} and SOP_{ccw} which produce phase-matched bi-directional outputs from the Mach Zehnder **10** labelled CW_{out} and CCW_{out} in the drawings.

[0130] Since modifications within the spirit and scope of the invention may readily be effected by persons skilled within the art, it is to be understood that this invention is not limited to the particular embodiment described by way of example hereinabove.

[0131] In the claims which follow and in the preceding description of the invention, except where the context requires otherwise due to express language or necessary implication, the word "comprise", or variations such as "comprises" or "comprising", is used in an inclusive sense, i.e. to specify the presence of the stated features but not to preclude the presence or addition of further features in various embodiments of the invention.

What is claimed is:

1. An apparatus for locating the position of an event, comprising:

a light source;

a waveguide for receiving light from the light source so that the light is caused to propagate in both directions along the waveguide to thereby provide counter-propagating optical signals in the waveguide, the waveguide being capable of having the counter-propagating optical signals or some characteristic of the signals modified or affected by an external parameter caused by or indicative of the event to provide modified counter-propagating optical signals which continue to propagate along the waveguide;

detector means for detecting the modified counter-propagating optical signals affected by the parameter and for determining the time difference between the receipt of the modified counter-propagating optical signals in order to determine the location of the event; and

a controller for controlling polarisation states of the counter-propagating optical signals so that the signals are amplitude and phase matched,

wherein the waveguide comprises a first arm for receiving the counter-propagating signals, and a second arm for receiving the counter-propagating signals, the first and second arms forming a Mach Zehnder interferometer, and the first arm being of different length than the second arm so that the first and second arms have a length mismatch,

the controller further comprising a dither signal producing element to wavelength dither the light from the light source.

2. The apparatus of claim **1** wherein the input polarisation states of the counter-propagating signals are controlled to achieve maximum output fringes at an output of the Mach Zehnder interferometer.

3. The apparatus of claim **1** wherein the controller comprises the detector means, a polarisation controller for each of the counter-propagating signals and the light source.

4. The apparatus of claim **3** wherein the controller includes a processor coupled to a polarisation control driver, and the polarisation control driver is coupled to the polarisation controllers for controlling the controllers to thereby set the polarisation of the signals supplied from the light source to the first and second arms of the Mach Zehnder interferometer to in turn set the polarisation of the counter-propagating signals.

5. The apparatus of claim **1** wherein the detector means comprises a first detector for one of the counter-propagating signals and a second detector for the other of the counter-propagating signals.

6. The apparatus of claim **5** wherein the controller includes a processor for receiving outputs from the detectors and for processing the outputs to indicate an event and to determine the location of the event.

7. The apparatus of claim **1** wherein the light source comprises a laser light source having bragg gratings and an adjuster for controlling at least one of the bragg gratings and a laser cavity of the laser light source to thereby alter the wavelength of the light signal output from the laser light source for producing the counter-propagating signals.

8. The apparatus of claim **1** wherein the detector means is connected to a Mach Zehnder output monitor for monitoring the counter-propagating signals detected by the detector means so that when the modified counter-propagating signals are detected by the detector means, the Mach Zehnder output monitor provides signals to a processor to determine the location of the event.

9. The apparatus of claim **1** wherein the dither signal producing element dithers the phase difference between the Mach Zehnder arms by at least 360°.

10. A method of locating an event comprising the steps of:

launching light into a waveguide so that the light is caused to propagate in both directions along the waveguide to thereby provide counter-propagating optical signals in the waveguide, the waveguide being capable of having the counter-propagating optical signals or some characteristic of the signals modified or affected by an external parameter caused by the event, to provide modified counter-propagating optical signals which continue to propagate along the waveguide;

substantially continuously and simultaneously monitoring the modified counter-propagating optical signals, so that when an event occurs, both of the modified counter-propagating optical signals affected by the external parameter are detected;

determining the time difference between the detection of the modified signals in order to determine the location of the event;

forming the waveguide as a Mach Zehnder interferometer having a first arm through which the counter-propagating optical signals travel, and a second arm through which the counter-propagating optical signals travel, wherein the first and second arms of the Mach Zehnder interferometer have a path length mismatch;

controlling the polarisation states of the counter-propagating optical signals input into the waveguide to provide amplitude and phase matched counter-propagating signals from the waveguide; and

dithering the wavelength of the launched light.

11. The method of claim **10** wherein the polarisation states of the counter-propagating signals provide amplitude and phase-matched counter-propagating signals from the waveguide which achieve maximum output fringes.

12. The method of claim **10** wherein the step of controlling the polarisation states comprises randomly changing the input polarisation states of the counter-propagating signals whilst monitoring the counter-propagating optical signals output from the Mach Zehnder interferometer to detect a substantially zero state of intensities, or maximum state of intensities of the counter-propagating signals, and selecting the input polarisations which provide the substantially zero or substantially maximum intensities.

13. The method of claim **10** wherein the step of controlling the polarisation states comprises controlling at least one polarisation controller to set the input polarisation state of signals supplied from a light source to each input of the Mach Zehnder interferometer to provide phase matched counter-propagating output signals.

14. A method of locating an event comprising the steps of:

launching light into a waveguide so that the light is caused to propagate in both directions along the waveguide to thereby provide counter-propagating optical signals in the waveguide, the waveguide being capable of having the counter-propagating optical signals or some characteristic of the signals modified or affected by an external parameter caused by the event, to provide modified counter-propagating optical signals which continue to propagate along the waveguide;

substantially continuously and simultaneously monitoring the modified counter-propagating optical signals, so that when an event occurs, both of the modified counter-propagating optical signals affected by the external parameter are detected;

determining the time difference between the detection of the modified signals in order to determine the location of the event;

forming the waveguide as a Mach Zehnder interferometer having a first arm through which the counter-propagating optical signals travel, and a second arm through which the counter-propagating optical signals travel;

controlling the polarisation states of the counter-propagating optical signals input into the waveguide to provide amplitude and phase matched counter-propagating signals from the waveguide; and

dithering the wavelength of the launched light by an amount which leads to the dithering of a phase difference between the Mach Zehnder arms by 360°.

* * * * *