US 20070272222A1

(19) United States

(12) Patent Application Publication

(10) Pub. No.: US 2007/0272222 A1

(43) Pub. Date: Nov. 29, 2007

Ho

(54) AIR GUN CHAMBER STRUCTURE

(76) Inventor: **Lin Ching Ho**, Taipei Hsien (TW)

Correspondence Address:
BIRCH STEWART KOLASCH & BIRCH
PO BOX 747
FALLS CHURCH, VA 22040-0747

(21) Appl. No.: **11/439,240**

(22) Filed: **May 24, 2006**

Publication Classification

(51) **Int. Cl.**
F41B 11/00 (2006.01)

(52) **U.S. Cl.** **124/73**

(57) **ABSTRACT**

An air gun chamber structure is composed of a valve seat, a valve, a valve cap screw, a nozzle, a nozzle seat, and related fittings. The valve seat is divided into two parts by a baffle, the valve is limited to a rear side of the valve seat by the valve cap screw, and the nozzle is limited to a front side of the valve seat by the nozzle seat. A pillar at a front end of the valve is transfixed into a vent-hole at a center of the baffle and is inserted into an opening at a rear end of the nozzle, an outer wall of the valve is provided with an indent section, at a position where the valve passes through the vent-hole, and a proper notch part is located at a portion of rear end of the valve which is inserted into an air hole at a center of the valve cap screw. In normal times, the rear end of valve is kept at being tightly connected into the air hole. Accordingly, after the valve is subjected to an impact, a time difference will be formed that a bullet will be ejected first prior to pulling back a slide.

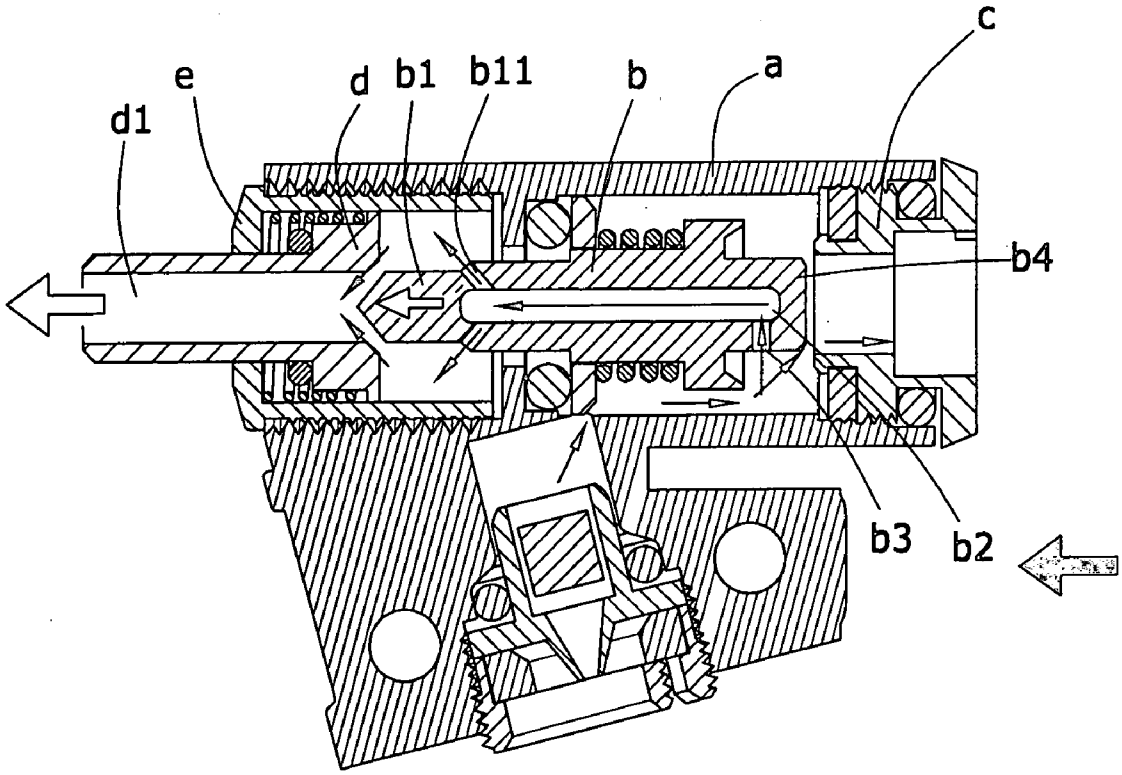

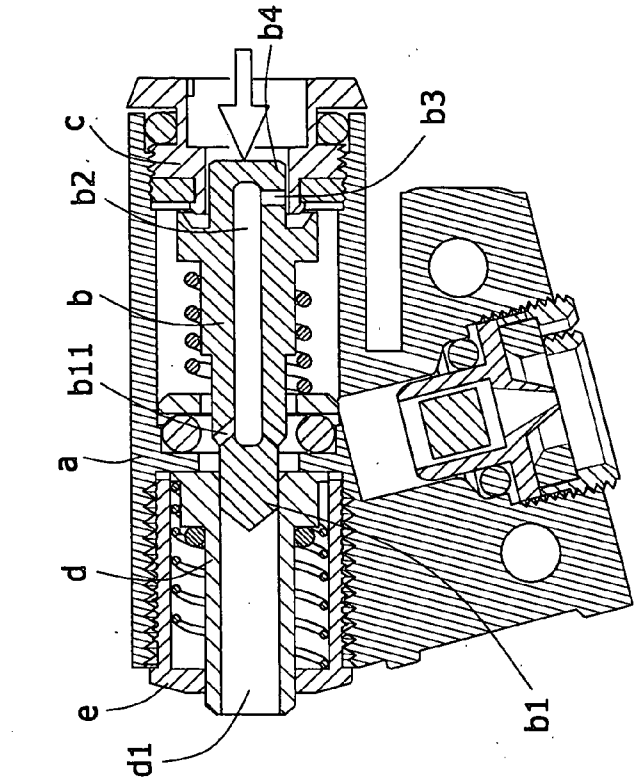

Fig.2

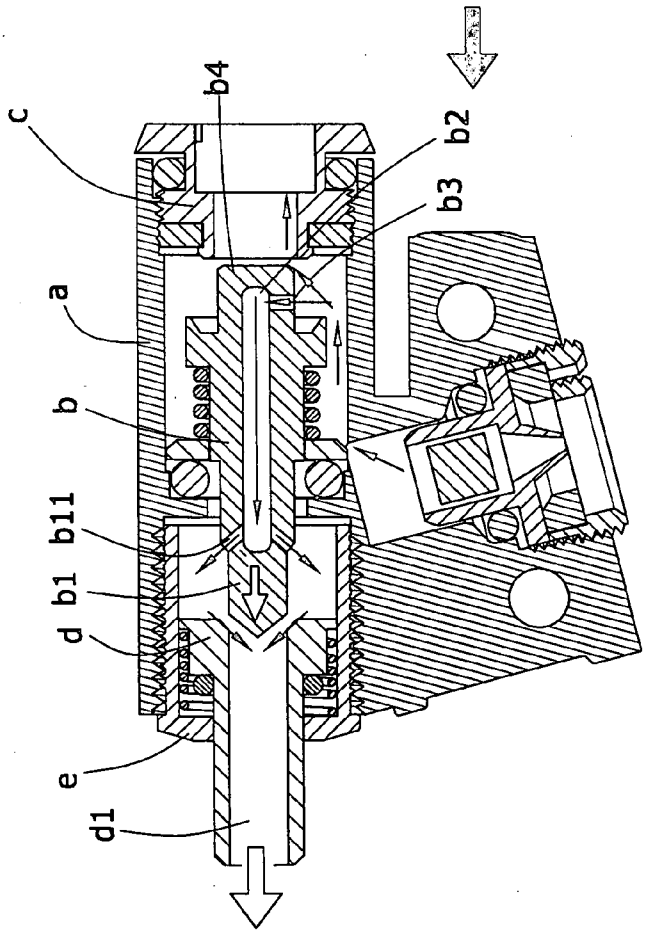

Fig.1

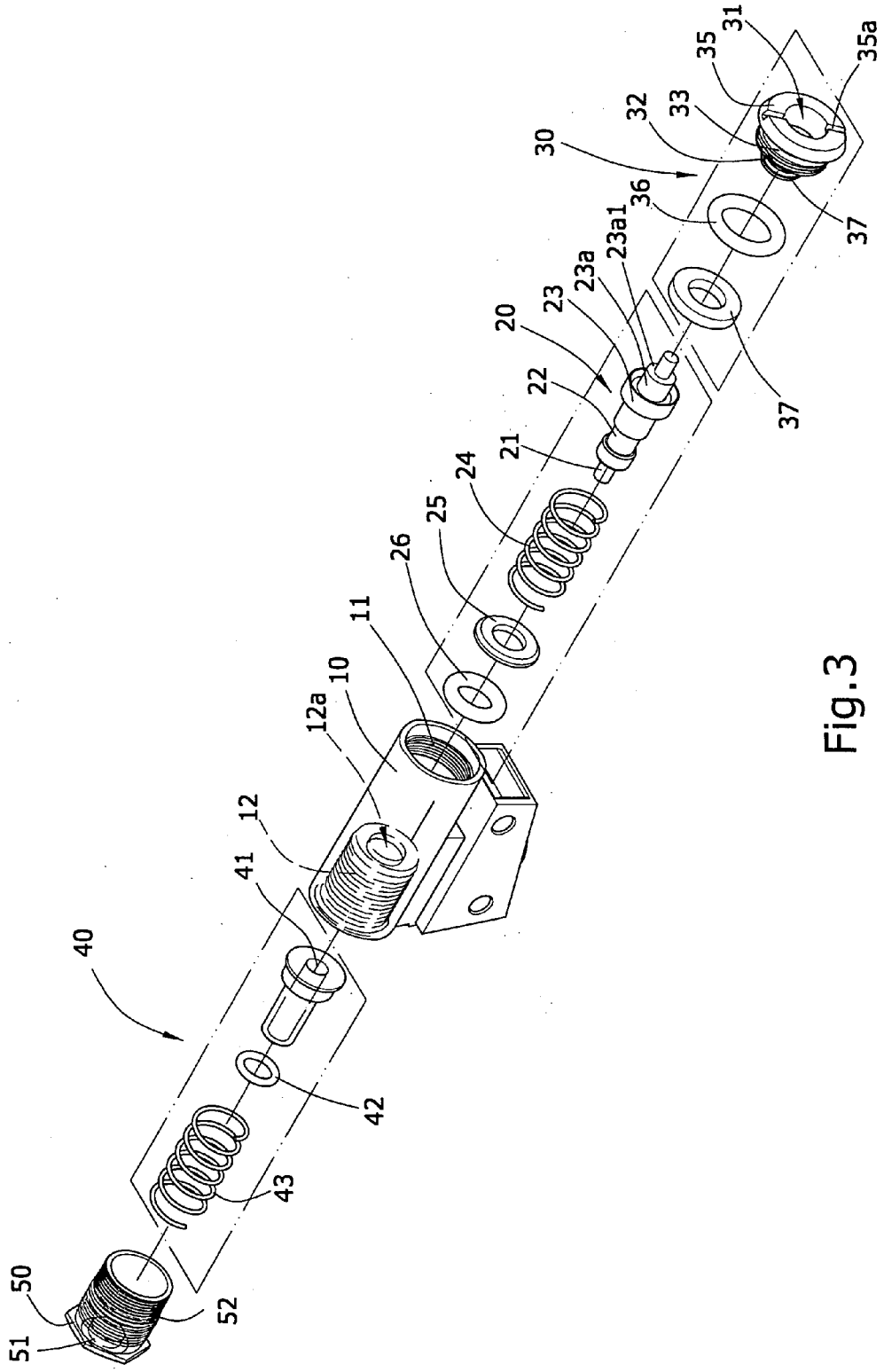
31
35
35a
32
33
30
36
37
23a1
23a
23
20
22
37
21
24
25
26
11
10
12a
12
41
40
42
43
50
52
51

Fig.3

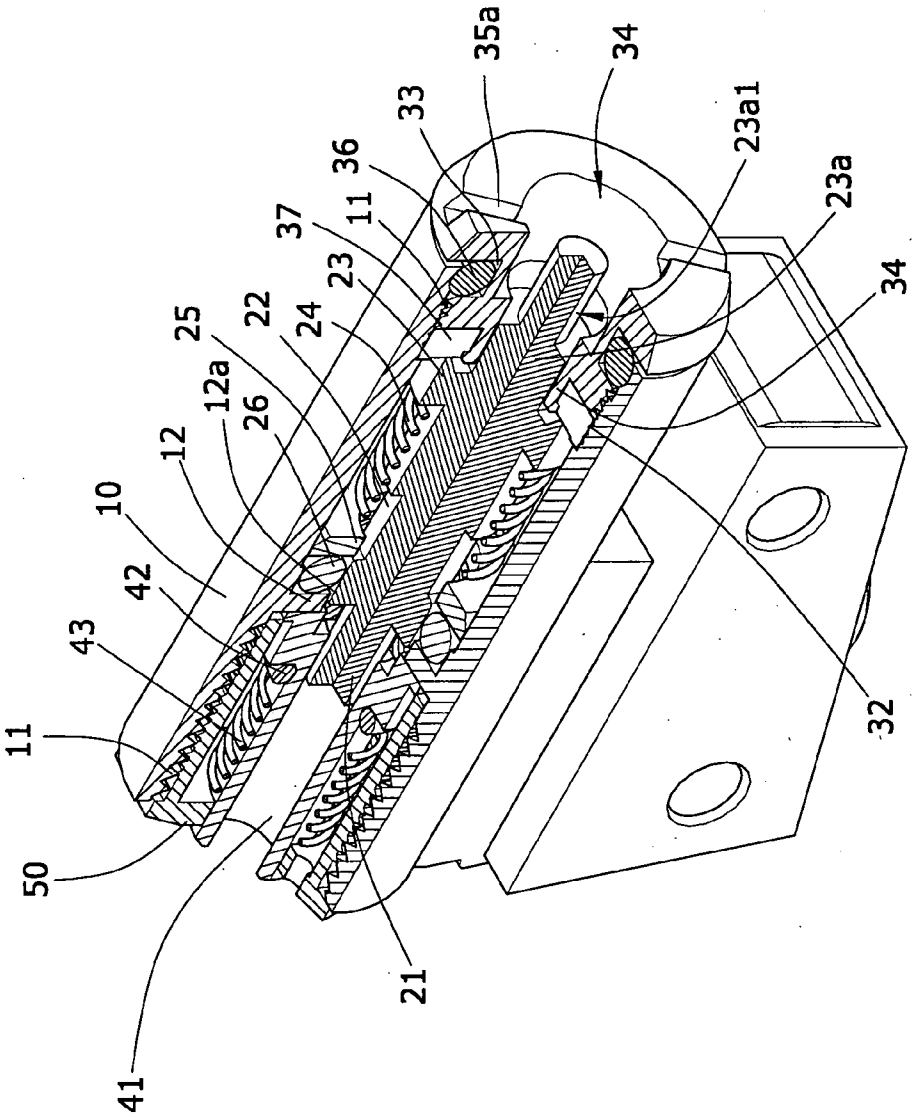
35a
34
33
23a1
36
23a
37
11
34
23
25
22
24
12a
26
12
10
42
43
11
32
50
21
41

Fig.4

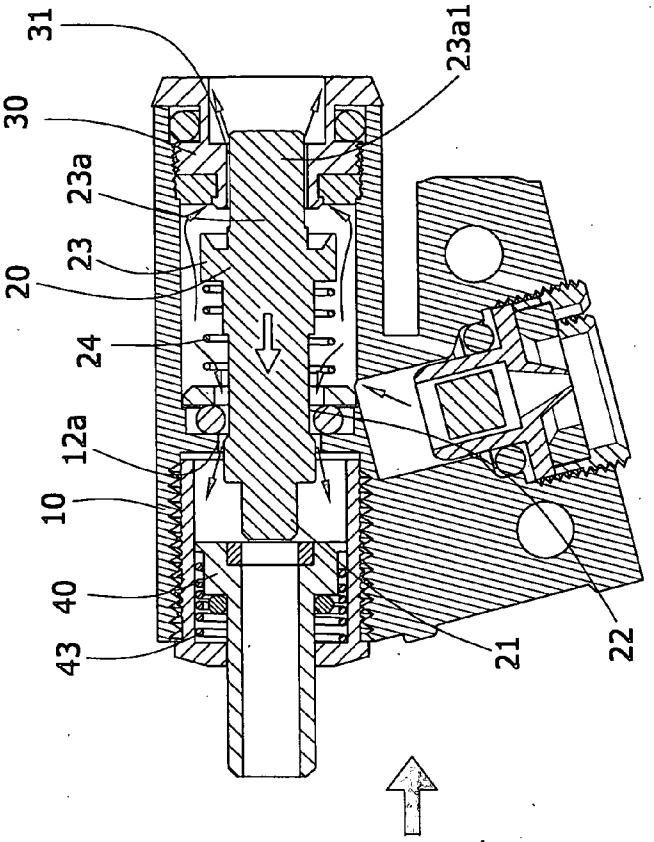
31
30
23a
23
20
24
12a
10
40
43
23a1
21
22

Fig.6

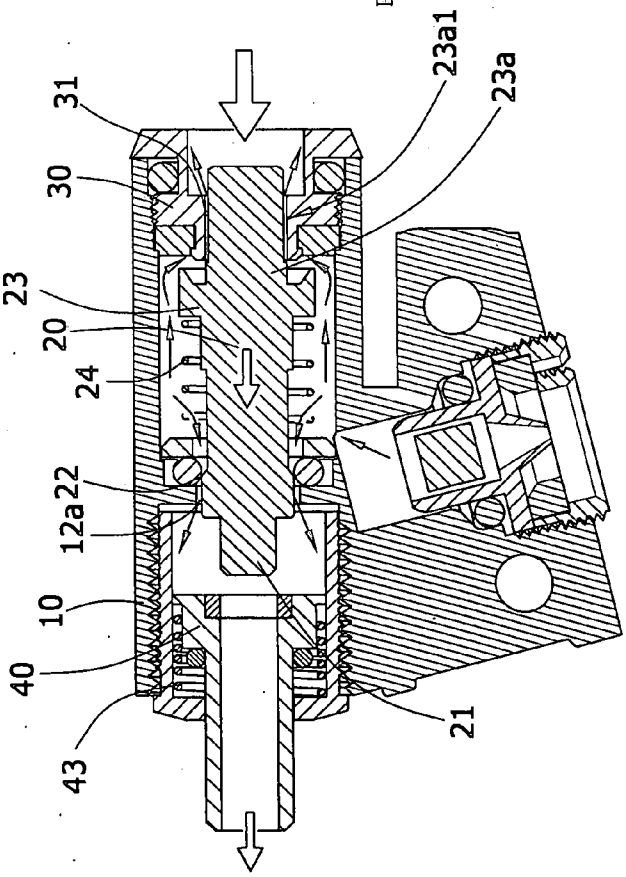
31
30
23
20
24
22
12a
10
40
43
23a1
23a
21

Fig.5

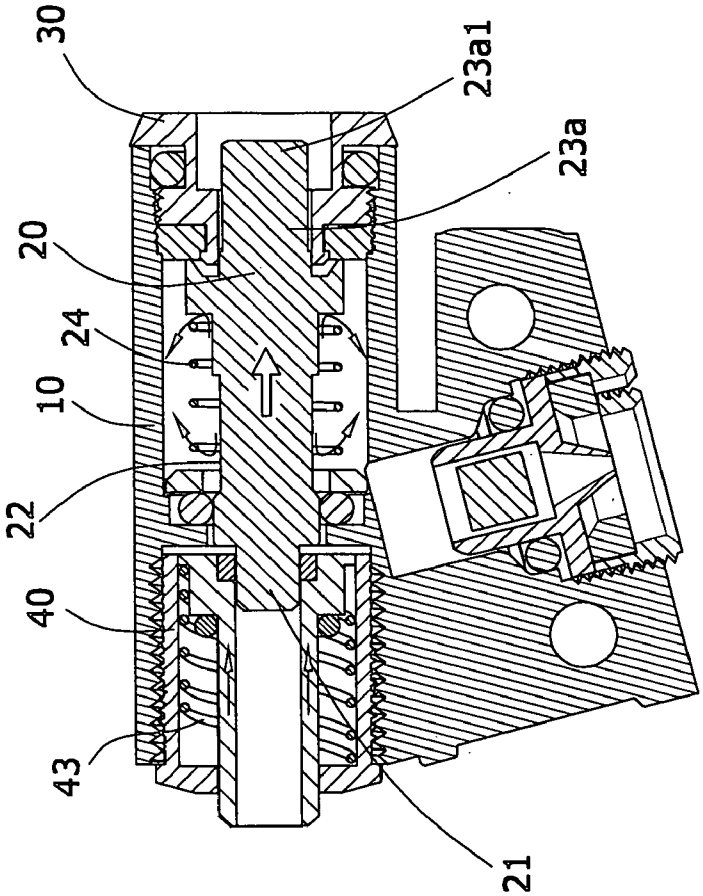

Fig. 7

AIR GUN CHAMBER STRUCTURE

BACKGROUND OF THE INVENTION

[0001] a) Field of the Invention

[0002] The present invention relates to an air gun chamber structure, and more particularly to a chamber structure which provides for storing air in an air gun, supplies power to shoot a bullet, and supplies power to pull back a slide of gun barrel after shooting.

[0003] b) Description of the Prior Art

[0004] Although an air gun is not a real gun, almost all of the exiting air guns are imitated to have sophisticated appearance like the real gun, along with an advancement of technology of making a gun, in recent years. In addition to having an emulated appearance, the air gun is also provided with all kinds of exceptional performances and its design is becoming more and more superior; whether a large rifle gun, an automatic pistol, or a revolver, they can all be made from the air gun. In addition to shooting the bullet, all kinds of characteristics of firearms can be simulated in the air gun, such as a cocking of striking hammer, a movement of slide toward a front and rear, or even a smoke upon ejecting a shell. Usually, a simpler firearm is only provided with functions of shooting the bullet and moving the slide forward and backward, as disclosed in the U.S. Pat. No. 6,026,797 "Air Gun." Referring to FIG. **1** and FIG. **2**, an interior of action is installed with a valve seat a, a valve b, a valve cap screw c, a nozzle d, a nozzle seat e, and related fittings. A front end of the valve seat a is connected to a bullet supplying chamber, a rear end is connected to a slide, and the valve seat a is divided into two parts by a baffle al installed in an interior of the valve seat a. The valve b is limited to a, rear end of the valve seat a by the valve cap screw c, whereas the nozzle d is limited to a front end of the valve seat a by the nozzle seat e. In addition, a cone-shape head b**1** at a front end of the valve b is transfixed into a vent-hole d**1** at a center of the nozzle d, and an interior of the valve b is opened with a penetrated vent-hole b**2** which discharges air through an air hole b**11** at a side of the cone-shape head b**1** of valve b, and takes in the air from an air hole b**3** which is located at a rear end of the valve b and is tightly assembled on a front end of the valve cap screw c. Therefore, when the striking hammer impinges on a hit pin b**4** at a rear end of the valve b, a joint place between the valve b and the valve cap screw c will be opened at the same time, such that the air will be blown out of the air hole b**11** at the front end to push the nozzle d at the front end to move, into the valve b through the vent-hole b**2** in an interior of the valve b. As a part of the air will be ejected out of the vent-hole d**1** of nozzle d to push out a bullet, and the air will be also ejected out of a clearance between a rear end of the valve b and the valve cap screw c, the slide will be pulled back. However, this kind of simultaneously discharging the air at the front end and the rear end will inevitably disperse the air pressure to affect a thrust when the bullet is ejected. Even that just prior to ejecting the bullet, a certain amount of vibration will be incurred by a relative sliding between the slide on a gun barrel and a gun body, so as to result in a shaking to the gun body, thereby affecting a trajectory and accuracy of the ejected bullet. As these drawbacks are not appreciated by consumers, an improvement is required.

[0005] Accordingly, a brand new air gun chamber structure is designed, wherein a clearance is created at a joint place between a valve seat and a valve, by an impulse of impact resulting from an impinging on the valve with a striking hammer, so as to continuously push the valve forward to a clearance between a notch part at its rear end and a valve cap screw, by the air pressure. After that, the air is charged into a slide which will then be pulled back, in order to simulate a status that the slide will be slid backward upon using a real gun. By the design of valve structure of present invention, a proper difference will be formed between a time of ejecting the bullet and that of pulling back the slide, which will not cause a shaking to the gun body to affect a trajectory and accuracy of the ejected bullet, due to a simultaneous operation of air pressure.

SUMMARY OF THE INVENTION

[0006] The primary object of present invention is to provide an air gun chamber structure to simulate a status in using a real gun, wherein its internal air pressure will not be operating at the same time, so as to form a proper difference between a time of ejecting a bullet and that of driving a slide to move backward, without affecting a trajectory of accuracy of the ejected bullet.

[0007] Accordingly, an air gun chamber structure of the present invention comprises a valve seat, a valve, a valve cap screw, a nozzle, a nozzle seat, and related fittings, wherein the valve seat is divided into two parts by a baffle, the valve is limited to a space at a rear of the valve seat baffle by the valve cap screw, the nozzle is limited to a space at a front of the valve seat by the nozzle seat, and a center of the baffle is opened with a vent-hole. A pillar at a front end of valve can be transfixed into the vent-hole and inserted into an opening at a rear end of nozzle. In addition, an outer wall of the valve is provided with an indent section at a position where the valve passes through the vent-hole, a proper notch part is located at a portion of rear end of the valve which is inserted into an air hole at a center of the valve cap screw, and the rear end of valve is kept at being tightly assembled into the air hole in normal times.

[0008] According to the aforementioned structures, after the rear end of valve is subjected to an impact by a striking hammer to move the valve forward, a flange at a rear end of the valve will be moved forward by a pushing of air which enters into the valve seat. When the indent section of valve passes through the vent-hole of valve seat, a clearance will be created, which will prohibit the air pressure to be unleashed and enable the air to be discharged from the clearance, thereby ejecting the bullet and pushing the nozzle forward at the same time. Within the same time, the valve is still moving forward continuously, until the notch part at the rear end of valve moves to a position relative to the air hole at the center of valve cap screw to create a clearance. When a gap for unleashing the pressure occurs at a rear end of the valve, the air pressure at a rear end of the valve seat will be charged backward into the slide instantly, to pull back the slide. When the air pressure inside the valve seat gradually decreases to be less than a restoring force of spring, the valve and the nozzle can be restored to their original positions by springs which are sheathed on the valve and the nozzle, thereby forming a constant mode of reciprocated motions. Accordingly, the air pressure inside the valve seat will not be operating simultaneously by the chamber of present invention, and a direction of air flow will be changed by a change of apertures between the indent section at the front end of valve and the vent-hole of valve seat, as well as between the notch part at the rear end of valve and the air hole of valve

cap screw, which results in a proper difference between the time of ejecting the bullet and that of driving the slide to move backward, without affecting the trajectory and accuracy of the ejected bullet.

[0009] To enable a further understanding of the said objectives and the technological methods of the invention herein, the brief description of the drawings below is followed by the detailed description of the preferred embodiments.

BRIEF DESCRIPTION OF THE DRAWINGS

[0010] FIG. **1** shows a schematic view of a conventional chamber in a closed status.

[0011] FIG. **2** shows a schematic view of a status of a conventional chamber after being subjected to an impact.

[0012] FIG. **3** shows an exploded view of the present invention.

[0013] FIG. **4** shows a cutaway view of the present invention after being assembled.

[0014] FIG. **5** shows a schematic view of a status of the present invention after being subjected to an impact.

[0015] FIG. **6** shows a second schematic view of a status of the present invention after being subjected to an impact.

[0016] FIG. **7** shows a schematic view of the present invention in a closed status.

DETAILED DESCRIPTION OF THE PREFERRED EMBODIMENTS

[0017] Referring to FIG. **3** and FIG. **4**, an air gun chamber structure of the present invention comprises a valve seat **10**, a valve **20**, a valve cap screw **30**, a nozzle **40**, a nozzle seat **50**, and related fittings.

[0018] The valve seat **10** is made into a sleeve-shape and is installed in an interior of action, with its front end being connected to a bullet supplying chamber, and its rear end being connected to a slide. Inner walls of openings at a front and rear end of the valve seat **10** are all provided with thread parts **11**, and an interior of the valve seat **10** is divided into two parts by a baffle **12** which is opened with a vent-hole **12***a* at a center, so as to limit the valve **20** to a space at a rear of the baffle **12***a* of valve seat **10** by the valve cap screw **30** and to limit the nozzle **40** to a space at a front of the valve seat **10** by the nozzle seat **50**.

[0019] A center of end surface at a front side of the valve **20** is protruded forward with a pillar **21**, a proper position on an outer wall at a front section of valve **20** is installed with an indent section **22**, a proper position on an outer wall at a rear end of valve **20** is installed with a flange **23** which is provided with an inverted cone surface facing toward the valve cap screw **30**, a center of the flange **23** is installed with a pillar **23***a* to be tightly connected with the valve cap screw **30**, and a proper position on the pillar **23***a* is provided with a notch part **23***a***1**. A valve axis spring **24**, a valve O-ring washer **25**, and a valve axis O-ring **26** are orderly sheathed at the front section of the valve **20**, and are then emplaced into the valve seat **10**, whereas the pillar **21** at the front end of valve **20** will be transfixed into the vent-hole **12***a* at the center of baffle **12** of valve seat **10**.

[0020] A center of the valve cap screw **30** is opened with a penetrated air hole **31** in a diameter corresponding to that of the rear end of valve **20**. An outer wall of the valve cap screw **30** is installed with a thread part **32** and a slot ring **33** which are correspondingly screwed with the valve seat **10**. A front end surface of the valve cap screw **30** is extended forward with a projected tube **34**, and a rear end surface of the valve cap screw **30** is installed with a flange **35**. An end surface of the flange **35** is provided with a groove **35***a* for inserting with a tool, an interior of slot ring **35***a* is installed with a valve cap O-ring **36**, and an outer wall of projected tube **34** is sheathed with a valve cap O-ring washer **37**. When the valve **20** is limited to the rear end of valve seat **10** by the valve cap screw **30**, the rear end of valve **20** is inserted into the air hole **31** of valve cap screw **30** to be screwed together, such that the flange **23** of valve **20** is tightly connected on the valve cap O-ring washer **36** of valve cap screw **30** in normal times.

[0021] The nozzle **40** is a stage-shape tube cap, and its center position is opened with a through-hole **41** to be inserted with the pillar **21** at the front end of valve **20**. A nozzle O-ring **42** and a nozzle spring **43** are orderly sheathed at a front of the nozzle **40**, and then are emplaced into the valve seat **10**.

[0022] The nozzle seat **50** is in a shape of tube cap, its center of closed end surface is installed with an opening **51** in a diameter corresponding to that of the front end of nozzle **40**, and an outer wall of nozzle seat **50** is installed with a thread part **52** which is correspondingly screwed with the valve seat **10**. When the nozzle **40** is limited to the front end of valve seat **10** by the nozzle seat **50**, the front end of nozzle **40** tube is inserted into the opening **51** of nozzle seat **50** to be screwed together, such that the pillar **21** of valve **20** is inserted into the through-hole **41** of nozzle **40**, in normal times.

[0023] Referring to FIGS. **5** to **7**, after the valve **20** is moved forward due to that its rear end is subjected to an impact by a striking hammer, the flange **23** at the rear end of valve **20** will be moved forward by a push of the air which enters into the valve seat **10**. When the indent section **22** of valve **20** passes through the vent-hole **12***a* of valve seat **10**, a clearance will be created, allowing the air to be blown into the clearance. At this time, the air will be moved forward to be flowing into the front end of valve seat **10** to eject out the bullet and to push the nozzle **40** forward simultaneously, by using a fact that the air pressure at the rear end is greater than that at the front end of valve seat **10**. Within this period of time, the valve **20** is still moving forward continuously, until the notch part **23***a***1** at the rear end of valve **20** moves to a position relative to the air hole **31** at the center of valve cap screw **30**. As an aperture formed by the notch part **23***a* at the rear end of valve **20** is greater than that between the vent-hole **12***a* at the front end and the indent section **22** of valve **20**, the air will be flowing toward the rear end of valve seat **10** instead and passing through the air hole **31**, and next will be entering into the slide to pull it back. When the air pressure inside the valve seat **10** gradually decreases, the structures will be restored to their original positions by using restoring forces of the valve axis spring **24** sheathed on the valve **20**, and the nozzle spring **43** of nozzle **40**, thereby forming a constant mode of reciprocated motions.

[0024] Accordingly, in the air gun chamber structure of present invention, a change of aperture between the valve and the valve seat is utilized to prohibit the internal air pressure to be operating simultaneously, so as to form a proper difference between the time of ejecting the bullet and that of driving the slide to move backward, without affecting the trajectory and accuracy of the ejected bullet.

[0025] It is of course to be understood that the embodiments described herein is merely illustrative of the principles of the invention and that a wide variety of modifications thereto may be effected by persons skilled in the art without departing from the spirit and scope of the invention as set forth in the following claims.

What is claimed is:

1. An air gun chamber structure including a valve seat, a valve, a valve cap screw, a nozzle, a nozzle seat, and related fittings; the valve seat being made into a sleeve-shape, being installed in an interior of an action, a front end of the valve seat being connected to a bullet supplying chamber, a rear end of the valve seat being connected to a slide, inner walls of openings at a front and rear end of the valve seat being all provided with thread parts, and an interior of the valve seat being divided into two parts by a baffle having a vent-hole at its center; the valve being limited to a space at a rear of the baffle of valve seat by the valve cap screw, whereas the nozzle being limited to a space at a front of the valve seat by the nozzle seat; a center of end surface at a front of the valve being protruded forward with a pillar, a proper position on an outer wall of front section of the valve being installed with an indent section, and a proper position on an outer wall at a rear end of the valve being installed with a flange having an inverted cone surface facing toward the valve cap screw; a center of the flange being provided with a pillar to be tightly connected with the valve cap screw; a proper position on the pillar being installed with a notch part; a valve axis spring, a valve O-ring washer, and a valve axis O-ring being orderly sheathed at the front section of the valve, followed by being emplaced into the valve seat, such that the pillar at the front end will be transfixed into the vent-hole at the center of baffle of valve seat; a center of the valve cap screw being opened with a penetrated air hole in a diameter which is corresponding to that of the rear end of valve, an outer wall of the valve cap screw being installed with a thread part and a slot ring which are correspondingly screwed with the valve seat, a front end surface of the valve cap screw being extended forward with a projected tube, and a rear end surface of the valve cap screw being installed with a flange; an end surface of the flange being installed with a groove for inserting with a tool; an interior of slot ring being installed with a valve cap O-ring, and an outer wall of projected tube being sheathed with a valve cap O-ring washer; when the valve being limited to the rear end of valve seat by the valve cap screw, the rear end of valve being inserted into the air hole of valve cap screw to be screwed together, such that the flange of valve is tightly connected on the valve cap O-ring washer of valve cap screw in normal times; the nozzle being a stage-shape tube cap, and its center position being opened with a through-hole to be inserted with the pillar at the front end of valve; a nozzle O-ring and a nozzle spring being orderly sheathed at the front of nozzle, followed by being emplaced into the valve seat; the nozzle seat being in a shape of tube cap, and a center of its closed end surface being opened with an opening in a diameter corresponding to that of the front end of nozzle; an outer wall of nozzle seat being installed with a thread part which is correspondingly screwed with the valve seat; when the nozzle being limited to the front end of valve seat by the nozzle seat, the front end of nozzle tube being inserted into the opening of nozzle seat to be screwed together, such that the pillar of valve is inserted into the through-hole of nozzle, in normal times.

* * * * *